VERSA PITTSFIELD

12-07-100-027

FINAL SITE PLAN

A PART OF THE NORTH 1/2 CORNER OF SECTION 7, T-3-S, R-6-E
PITTSFIELD TOWNSHIP, WASHTENAW COUNTY, MICHIGAN

OWNER/APPLICANT
VERSA DEVELOPMENT
MR. RYAN SCHULTZ
25900 WEST 11 MILE ROAD
SOUTHFIELD, MI 48034
(248) 352-2425

ENGINEER
GIFFELS-WEBSTER
MS. NANCY STANDISH, PE
1025 E. MAPLE, SUITE 100
BIRMINGHAM, MI 48009
(248) 852-3100

ARCHITECT
NORR
MR. BRIAN COLBURN
719 GRISWOLD, SUITE 1000
DETROIT, MI 48226
(313) 324-3119

LANDSCAPE ARCHITECT
ALLEN DESIGN
MR. JIM ALLEN, RLA
557 CARPENTER
NORTHVILLE, MI 48167
(248) 467-4668

GENERAL NOTES

1. ALL CONSTRUCTION SHALL BE PERFORMED IN ACCORDANCE WITH THE CURRENT STANDARDS, SPECIFICATIONS AND GENERAL CONDITIONS OF THE CHARTER TOWNSHIP OF PITTSFIELD, AND ANY/OR OTHER AGENCIES HAVING JURISDICTION.
2. A WASHTENAW COUNTY ROAD COMMISSION PERMIT IS REQUIRED FOR WORK WITHIN THE OAK VALLEY DRIVE AND ANN ARBOR–SALINE ROAD RIGHT–OF–WAY AND THE LOHR ROAD HIGHWAY EASEMENT.
3. UTILITY INFORMATION SHOWN ON THESE PLANS WAS OBTAINED FROM UTILITY OWNERS AND THEREFORE MAY NOT BE ACCURATE OR COMPLETE. THE CONTRACTOR SHALL VERIFY AND OBTAIN ANY INFORMATION NECESSARY REGARDING THE PRESENCE OF UNDERGROUND UTILITIES WHICH MIGHT HAVE AN IMPACT ON THIS PROJECT, AND SHALL BE RESPONSIBLE FOR ANY DAMAGE TO ANY PUBLIC OR PRIVATE UTILITIES WHETHER OR NOT THEY ARE SHOWN ON THE PLANS.
4. IT SHALL BE THE CONTRACTOR'S RESPONSIBILITY TO VERIFY LOCATIONS AND ELEVATIONS OF EXISTING UTILITIES AT PROPOSED CONNECTIONS AND/OR CROSSINGS, AND TO NOTIFY THE ENGINEER OF ANY DISCREPANCIES TO THESE PLANS.
5. THE CONTRACTOR SHALL CONTACT MISS DIG AT (800) 482–7171 FOR THE LOCATION OF UNDERGROUND FACILITIES, AND SHALL ALSO NOTIFY REPRESENTATIVES OF OTHER UTILITIES NOT PART OF MISS DIG, BUT HAS FACILITIES LOCATED IN THE VICINITY OF THE WORK AT LEAST 72 HOURS PRIOR TO EXCAVATION.
6. ALL PERMITS REQUIRED SHALL BE OBTAINED BY THE CONTRACTOR. ALL PERMIT FEES, BONDS, AND INSURANCE REQUIRED BY THE ISSUING AGENCIES SHALL BE PROVIDED BY THE CONTRACTOR, AND MUST BE KEPT CURRENT. THE CONTRACTOR IS RESPONSIBLE FOR ALL OTHER FEES, INSPECTION COSTS, ETC., AND SHALL ADHERE TO ALL REQUIREMENTS SET FORTH IN SAID PERMITS.
7. THE CONTRACTOR SHALL BE RESPONSIBLE FOR SECURING ALL WORK AREAS TO ENSURE THE SAFETY OF ALL OCCUPANTS, VISITORS, PEDESTRIANS, WORKERS, ETC. THE CONTRACTOR SHALL REPAIR AND MAINTAIN ALL CONSTRUCTION FENCING AS NECESSARY.
8. THE CONTRACTOR SHALL PROVIDE FOR CONTROLLED ACCESS TO THE SITE FOR USE BY THE VARIOUS WORK FORCES, EMERGENCY VEHICLES, OCCUPANTS, VISITORS, ETC. THROUGHOUT CONSTRUCTION. THIS ACCESS MUST PROVIDE FOR THE REMOVAL OF MUD FROM VEHICLES TIRES. ROADWAYS AND DRIVEWAYS SHALL BE MAINTAINED OPEN FOR EMERGENCY VEHICLES AT ALL TIMES. IT SHALL BE THE CONTRACTOR'S RESPONSIBILITY TO NOTIFY THE RESIDENTS AND BUSINESSES WHOSE DRIVEWAYS ARE AFFECTED BY HIS SCHEDULE, 24 HOURS IN ADVANCE. CONTRACTOR SHALL SCHEDULE CONSTRUCTION AT NON–PEAK USE HOURS AND SHALL MINIMIZE DRIVEWAY CLOSURE BY EXPEDITING CONSTRUCTION.
9. THE CONTRACTOR SHALL PROVIDE NECESSARY SIGNS, BARRICADES, AND LIGHTS TO PROTECT THE TRAFFIC AND THE WORK AS DIRECTED BY THE PLANS OR BY THE AGENCY WITH JURISDICTION. ALL TRAFFIC CONTROLS SHALL BE IN ACCORDANCE WITH THE MICHIGAN MANUAL OF UNIFORM TRAFFIC CONTROL DEVICES (MMUTCD).
10. THE CONTRACTOR IS REQUIRED TO CONFINE CONSTRUCTION ACTIVITIES TO THE LIMITS OF THE SITE AS SHOWN ON THE CONSTRUCTION PLANS. ANY DAMAGE OR DISRUPTION TO ADJACENT SITES IS THE RESPONSIBILITY OF THE CONTRACTOR TO CORRECT IMMEDIATELY. NO OFF–SITE WORK SHALL BE PERFORMED OUTSIDE OF PUBLIC RIGHTS–OF–WAY OR DEDICATED EASEMENTS WITHOUT PRIOR WRITTEN APPROVAL OF THE PROPERTY OWNER.
11. GREAT CARE SHALL BE TAKEN TO AVOID DAMAGE TO VEGETATION OUTSIDE THE CLEARING AND GRUBBING LIMITS. NO DRIVING OR PARKING OF VEHICLES AND/OR STORAGE OF MATERIALS AND SUPPLIES SHALL BE PERMITTED OUTSIDE THE LIMITS OF CONSTRUCTION.
12. THE PROTECTION OF EXISTING TREES, AS REQUIRED, SHALL BE SOLELY THE CONTRACTOR'S RESPONSIBILITY.
13. ALL CONSTRUCTION SHALL HAVE INSPECTION PROVIDED BY PITTSFIELD CHARTER TOWNSHIP. THE CONTRACTOR SHALL CONTACT PITTSFIELD CHARTER TOWNSHIP 48 HOURS BEFORE THE START OF CONSTRUCTION.
14. THE CONTRACTOR SHALL BE RESPONSIBLE FOR DUST CONTROL, AND SHALL PROVIDE ALL NECESSARY MATERIAL AND EQUIPMENT TO KEEP DUST IN CHECK AT ALL TIMES. THE CONTRACTOR SHALL RESPOND IMMEDIATELY TO ANY AND ALL COMPLAINTS. DUST CONTROL SHALL BE INCIDENTAL TO THE PROJECT.
15. DURING CONSTRUCTION, THE CONTRACTOR MAY ENCOUNTER SPRINKLER HEADS, PIPING, LIGHTING AND BURIED ELECTRICAL CABLE, MAILBOXES, FENCES, SIGNS, ETC., THAT MAY OR MAY NOT BE INDICATED ON THESE PLANS. THE CONTRACTOR SHALL REPLACE AND/OR RESTORE ALL COMPONENTS OF SUCH SYSTEMS. ALL DISTURBED AREAS SHALL BE RESTORED TO THEIR ORIGINAL CONDITION, MINIMUM STANDARD REQUIREMENTS, OR AS SPECIFIED HEREIN; WHICHEVER IS MORE STRINGENT.
16. ROADWAY, DRIVEWAY, AND PARKING AREA FINAL RESTORATION SHALL BE PERFORMED WITH SURFACE AND BASE MATERIALS MATCHING EITHER THE EXISTING MATERIALS IN QUALITY AND THICKNESS, PER MINIMUM REQUIREMENTS, OR PER THE DETAILS ON SHEET 12.
17. ALL LOT MARKERS AND MONUMENT POINTS DISTURBED DURING CONSTRUCTION SHALL BE REPLACED BY A REGISTERED LAND SURVEYOR AT THE EXPENSE OF THE CONTRACTOR.
18. FINAL CLEANUP AND RESTORATION SHALL CONSIST OF FINE GRADING OF CONSTRUCTION AREAS, REMOVAL OF CONSTRUCTION SIGNS, ETC. TOPSOIL SHALL BE SPREAD OVER ALL DISTURBED AREAS, FOLLOWED BY SEED, FERTILIZER AND EROSION MAT OR STRAW MULCH, OR AS FURTHER REQUIRED BY THE LANDSCAPING PLANS AND SPECIFICATIONS. ALL REQUIRED RESTORATION ITEMS NOT SPECIFICALLY IDENTIFIED AS A PAY ITEM SHALL BE CONSIDERED INCIDENTAL TO THE CONTRACT.
19. THE UTILITY POLES SHOWN ON THESE DRAWINGS ARE INTENDED TO SHOW ONLY THE LOCATION OF EXISTING POLES. THE CONTRACTOR IS RESPONSIBLE FOR DETERMINING THE QUANTITY AND DIRECTION OF OVERHEAD LINES. THE COST FOR SUPPORTING AND RELOCATING POLES SHALL BE INCIDENTAL TO THE PROJECT.
20. THE MEANS AND METHODS OF CONTROLLING GROUNDWATER AND DEWATERING ARE THE SOLE RESPONSIBILITY OF THE CONTRACTOR. ALL COST ASSOCIATED WITH DEWATERING SHALL BE INCIDENTAL TO THE CONTRACT.
21. THIS PROJECT IS WITHIN 500 FEET OF A WATERCOURSE.

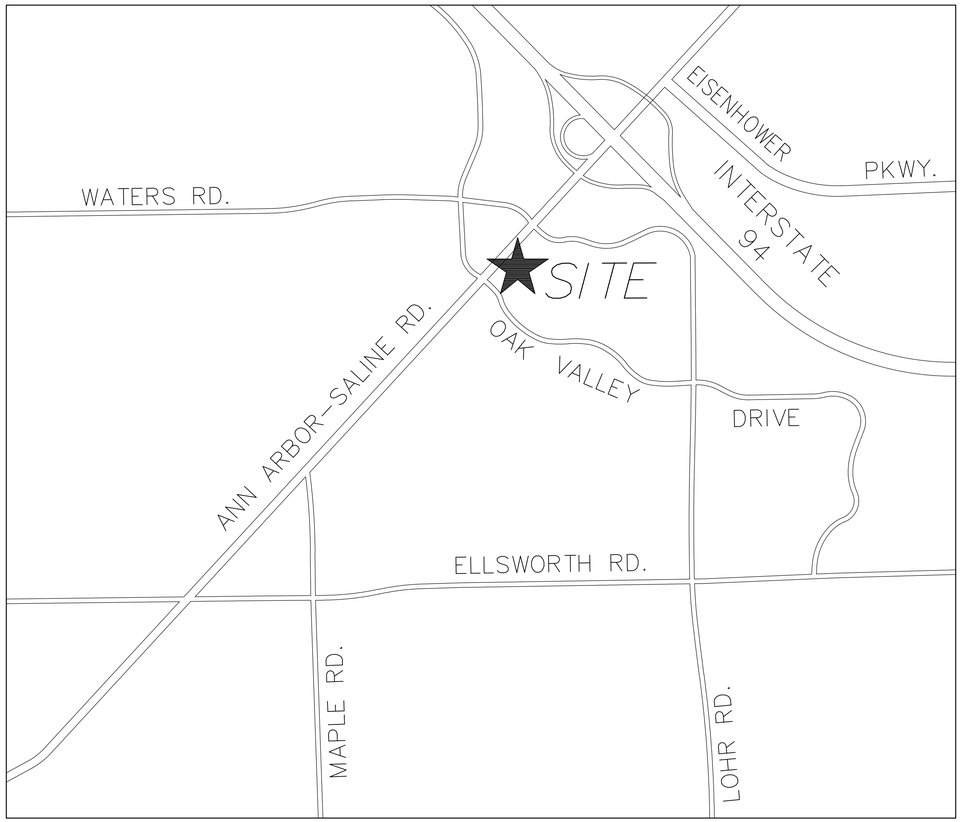

LOCATION MAP

NOT TO SCALE

APPROVALS AND PERMITS

NAME	SUBMITTAL DATE	REVISION DATE(S)	APPROVAL DATE	PERMIT NO.
PRELIMINARY SITE PLAN APPROVAL	06.27.2014	07.29.2014	-	-
FINAL SITE PLAN APPROVAL	09.02.2014	-	-	-
TOWNSHIP ENGINEERING	-	-	-	-
TOWNSHIP UTILITY CONST. PERMIT	-	-	-	-
TOWNSHIP SESC	-	-	-	-
MDEQ NPDES	-	-	-	-
WCRC COMMERCIAL APPROACH PERMIT	06.25.2013	09.23.2013, 11.20.2013	02.04.2014	APPROVAL
WCRC UTILITY WORK PERMIT	06.25.2013	09.23.2013, 11.20.2013	02.04.2014	APPROVAL
WCWRC SW SYSTEM APPROVAL	06.25.2013	09.23.2013, 11.12.2013	11.20.2013	APPROVAL

PARKING CALCULATIONS: SEE SHEET 47-SP1

SHEET INDEX

01 COVER SHEET
02 TOPOGRAPHIC SURVEY
03 DEMOLITION PLAN
04 AREA WIDE MAP
05 SITE / PAVING PLAN
06 GRADING PLAN
07 SANITARY LEAD PLAN & PROFILES
08 WM LEAD PLAN & PROFILES
09 STORM SEWER PLAN & PROFILES
10 STORM SEWER PLAN & PROFILES
11 UTILITY CALCULATIONS, NOTES AND DETAILS
12 SITE DETAILS
13 SOIL BORING LOGS
14 SANITARY SEWER SERVICE DISTRICT MAP
15 EXISTING DRAINAGE AREA PLAN
16 PROPOSED DRAINAGE AREA PLAN
17 SITE STORMWATER MANAGEMENT PLAN
18 FIRE PROTECTION PLAN
19 WATER QUALITY UNIT DETAILS
20 UNDERGROUND DETENTION DETAILS
21 UNDERGROUND DETENTION DETAILS

SHEETS BY OTHERS
22-SP1 SITE PLAN
23-SP2 CONTEXT PLAN
24 BUILDING 'C' LEASE PLAN
25 EXTERIOR ELEVATIONS BUILDING 'C' COLOR
26 BUILDING 'E' LEASE PLAN
27 EXTERIOR ELEVATIONS BUILDING 'E' COLOR

28-L-1 LANDSCAPE PLAN
29-L-2 LANDSCAPE DETAIL SHEET

30 TEXAS ROADHOUSE EXTERIOR ELEVATIONS
31 TEXAS ROADHOUSE EXTERIOR ELEVATIONS
32 TEXAS ROADHOUSE EXTERIOR ELEVATIONS
33 TEXAS ROADHOUSE FLOOR PLAN

34 SITE LIGHTING PLAN
35 SITE LIGHTING CUT SHEETS
36 SITE LIGHTING DETAILS

PITTSFIELD TOWNSHIP STANDARD DETAIL SHEETS
1 SHEET EARTHWORK SPECIFICATIONS
1 SHEET SANITARY SEWER SPECIFICATIONS
1 SHEET SANITARY SEWER DETAILS
1 SHEET SOIL EROSION DETAILS AND NOTES
1 SHEET STORM SEWER DETAILS AND SPECIFICATIONS
1 SHEET WATERMAIN SPECIFICATIONS
1 SHEET WATERMAIN DETAILS

PHASE 2

ZONING DATA:	FB–FORM BASED
GROSS LOT AREA:	3.40 ACRES 148,235 SF
NET LOT AREA:	2.91 ACRES 127,066 SF
GROUND FLOOR AREA:	19,100 SF
TOTAL FLOOR AREA:	19,100 SF
LOT COVERAGE:	0.15
NET LOT COVERAGE	2.49 ACRES IMP. 86% IMPERVIOUS
FLOOR AREA RATIO	0.13
BUILDING HEIGHT #FLOORS PAD C – 1,900 SF, 1 STORY PAD E – 9,900 SF, 1 STORY PAD F – 7,300 SF, 1 STORY	
NUMBER OF BUILDINGS:	3
REQUIRED YARDS:	
FRONT	10' MAX.
SIDE	0
REAR	30' MIN.
BUILDING HEIGHT (ALL BUILDINGS)	26'–8"

giffels webster
Engineers
Surveyors
Planners
Landscape Architects
Environmental Specialists

1025 E. Maple Road
Suite 100
Birmingham, MI 48009
p (248) 852-3100
f (248) 852-6372
www.giffelswebster.com

Executive:	M.P.
Manager:	J.K.A.
Designer:	N.M.T.
Quality Control:	
Section:	7
	T-3-S R-6-E

Professional Seal:

STATE OF MICHIGAN
NANCY M. TODD
ENGINEER
No. 61386
LICENSED PROFESSIONAL ENGINEER

Nancy Mead

811 Know what's below. Call before you dig.

DATE:	ISSUE:
06.26.2014	SUBMIT PRELIMINARY SITE PLAN
07.29.2014	RESUBMIT PRELIMINARY SITE PLAN WITH REVISED LAYOUT
09.03.2014	SUBMIT FINAL SITE PLAN

Developed For:

VERSA DEVELOPMENT

25900 W. 11 MILE ROAD
SUITE 250
SOUTHFIELD, MI 48034
(248) 416-1985

COVER SHEET

VERSA PITTSFIELD PHASE 2

PITTSFIELD TOWNSHIP
WASHTENAW COUNTY
MICHIGAN

Date:	12.14.2012
Scale:	NA
Sheet:	1
Project:	18270.00

Copyright © 2012 Giffels Webster.
No reproduction shall be made without the prior written consent of Giffels Webster.

VERSA PITTSFIELD
CSPA #12-14

H:\18\18200.18270 Versa Pittsfield\Drawing Files\Engineering\Phase 2\01 Cover.dwg

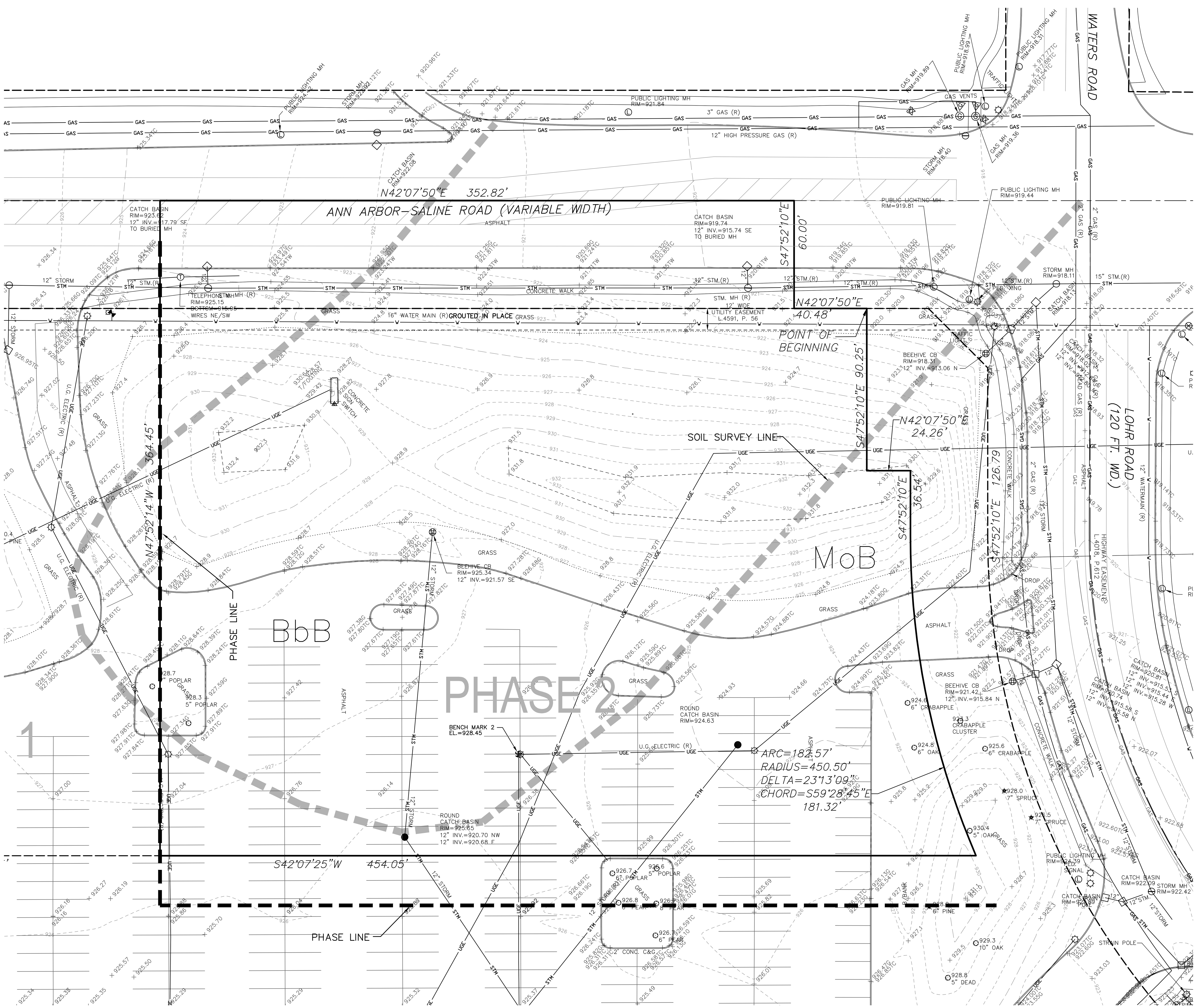

SOIL SURVEY
(FROM NATURAL RESOURCES CONSERVATION SERVICE)

BbB – BLOUNT LOAM, 2 TO 6 PERCENT SLOPES

MoB – MORLEY LOAM, 2 TO 6 PERCENT SLOPES

SCALE: 1"=30'

LEGEND – EXISTING

E/ PAVEMENT; CURB; E/ GRAVEL; CL ROAD; E/ WALK; RAILROAD; E/ BRICK; MISC. LINE; FENCE; GUARD RAIL; WALL; BLDG. LINE; OVERHEAD WIRES; RAILING; OVERHANG LINE; T/ BANK; B/ BANK; CL DITCH/STREAM; SHRUB LINE; TREE LINE; WATER EDGE; WETLAND LINE; STORM LINE; SAN. LINE; WATER LINE; GAS LINE; UG ELEC. LINE; UG TELE. LINE; UG CABLE TV LINE; PAINT STRIPE; COMBINED SEWER; PLD LINE; STEAM LINE; SECTION LINE

SAN. MH; SAN. CLEAN OUT; SAN. RISER; SAN. PUMP STATION; GATE VALVE; HYDRANT; WATER VALVE; WATER METER; POST INDICATOR VALVE; WELL HEAD; FDC CONNECTION; IRRIGATION CONTROL BOX

STORM MH; CATCH BASIN; BEEHIVE CB; CULVERT E.S.; ROOF/DOWN SPOUT; OVERFLOW/OUTLET STRUCTURE; STORM CLEAN OUT; ROUND CB; LIGHT POLE; UTILITY POLE; ELEC. TRANS.; AIR CONDITIONER; ELEC. MH; ELEC. METER; ELEC. RISER; TRAFFIC CONTROL BOX; PUBLIC LIGHTING MH; GAS METER; GAS RISER; GAS VALVE; GAS MH; TELE. RISER; TELE. MH; TELE. CROSS BOX; CABLE RISER; PAY PHONE; MANHOLE; SIGN; PROT. POST/GUARD POST; GUY; DECIDUOUS TREE; CONIFEROUS TREE; UTILITY FLAG

BLDG. CORNER (FIELD LOCATED); HANDICAP PARKING; WETLAND FLAG; BUSH/SHRUB; PARKING METER; RESIDENTIAL MAILBOX; U.S. MAILBOX; 000.00+ 000.0 EXISTING ELEVATION; SOILBORING; MONITORING WELL; LAWN IRRIG. HEAD; CENTERLINE R.R. TRACK; MISC. TOPO. SHOT; SURVEY CONTROL POINT; FOUND IRON; FOUND NAIL; F. CUT CROSS; SECTION COR.; FENCE POST; BENCHMARK; FOUND PIPE; FOUND MON.

ASPH.	ASPHALT
CONC.	CONCRETE
A.C.	AIR CONDITIONER
G.P.	GUARD POST
C.L.F.	CHAIN–LINK FENCE
D.L.	DOOR LEDGE
F.F.	FINISHED FLOOR
O.H.	OVERHANG
F.I.	FOUND IRON
S.I.	SET IRON
F.I.P.	FOUND IRON PIPE
M.	MEASURED
R.	RECORD
F.M.	FOUND MONUMENT
S.N.	SET NAIL
CMP	CORREGATED METAL PIPE
RCP	REINFORCED CONCRETE PIPE

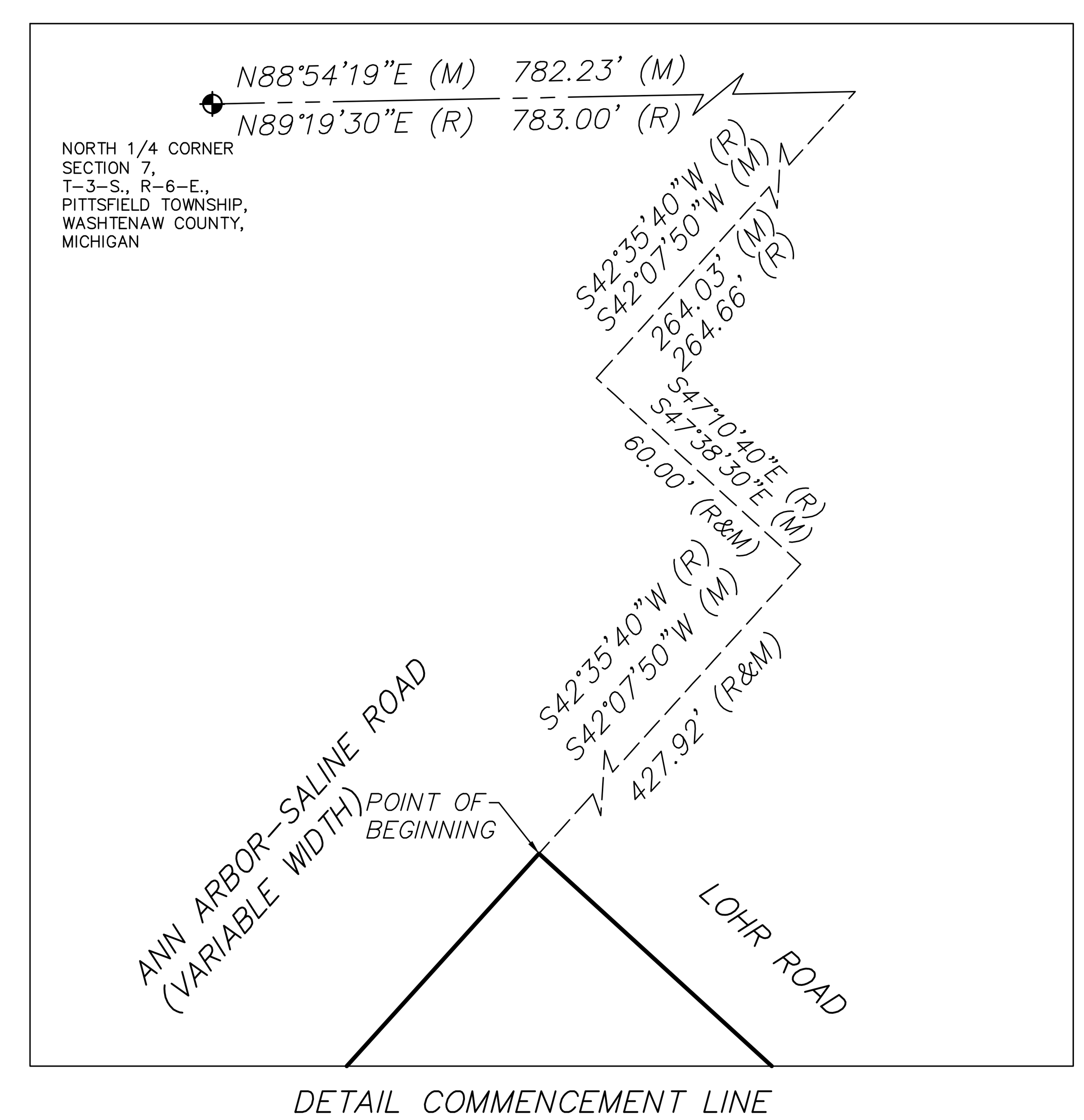

DETAIL COMMENCEMENT LINE

PROPERTY DESCRIPTION
PROPOSED PHASE 2 DEVELOPMENT PARCEL DESCRIPTION

(PART OF TAX ID NO.: L–12–07–100–031)
PART OF THE NORTHEAST 1/4 OF SECTION 7, TOWN 3 SOUTH, RANGE 6 EAST, PITTSFIELD TOWNSHIP, WASHTENAW COUNTY, MICHIGAN, MORE PARTICULARLY DESCRIBED AS:

COMMENCING AT THE NORTH 1/4 CORNER OF SECTION 7; THENCE N.88°54'19"E., 782.23 FEET ALONG THE NORTH LINE OF SAID SECTION 7, TO A POINT ON THE CENTERLINE OF ANN ARBOR–SALINE ROAD (VARIABLE WIDTH); THENCE S.42°07'50"W., 264.03 FEET ALONG SAID CENTERLINE; THENCE S.47°38'30"E., 60.00 FEET; THENCE S.42°07'50"W., 412.92 FEET TO THE POINT OF BEGINNING; THENCE S.47°52'10"E., 90.25 FEET; THENCE N.42°07'50"E., 24.26 FEET; THENCE S.47°52'10"E., 36.54 FEET; THENCE ALONG A TANGENT CURVE TO THE LEFT, 182.57 FEET, SAID CURVE HAVING A RADIUS OF 450.50 FEET, A CENTRAL ANGLE OF 23°13'09", AND A CHORD BEARING S.59°28'45"E., 181.32 FEET; THENCE S.42°07'25"W., 454.05 FEET; THENCE N.47°52'14"W., 364.45 FEET TO A POINT ON THE CENTERLINE OF ANN ARBOR–SALINE ROAD (VARIABLE WIDTH); THENCE N.42°07'50"E., 352.82 FEET; THENCE S.47°52'10"E., 60.00 FEET; THENCE N.42°07'50"E., 40.48 FEET TO THE POINT OF BEGINNING AND CONTAINING 3.403 ACRES.

SUBJECT TO THE RIGHTS OF THE PUBLIC IN ANN ARBOR–SALINE ROAD.

SCHEDULE B – SECTION II EXCEPTIONS
(PER TITLE COMMITMENT NO. N–107335, PREPARED BY COMMONWEALTH LAND TITLE INSURANCE COMPANY AND ITS UNDERWRITER FIDELITY NATIONAL TITLE INSURANCE COMPANY, DATED MAY 7, 2012.)

7. EASEMENTS TO THE BOARD OF COUNTY ROAD COMMISSIONERS OF THE COUNTY OF WASHTENAW FOR HIGHWAY PURPOSES, AS RECORDED IN LIBER 2272, PAGE 887, LIBER 2584, PAGE 695, AND LIBER 3076, PAGE 231. –SHOWN GRAPHICALLY

8. EASEMENT AND THE TERMS, CONDITIONS AND PROVISIONS WHICH ARE RECITED IN JOINT ROADWAY AGREEMENT RECORDED IN LIBER 2318, PAGE 638. –SHOWN GRAPHICALLY.

9. EASEMENT TO PITTSFIELD CHARTER TOWNSHIP FOR WATER MAINS AND SANITARY SEWERS, ALONG WITH OTHER SERVICES IN THE PUBLIC UTILITIES SYSTEM RECORDED IN LIBER 4591, PAGE 56.

–WATER MAIN EASEMENT SHOWN GRAPHICALLY.
–SANITARY SEWER EASEMENT NOT ON SUBJECT PROPERTY.
–UTILITY EASEMENT SHOWN GRAPHICALLY

NOTES:

- SURVEY IN ACCORDANCE WITH TITLE COMMITMENT NO. N–107335, PREPARED BY COMMONWEALTH LAND TITLE INSURANCE COMPANY AND ITS UNDERWRITER FIDELITY NATIONAL TITLE INSURANCE COMPANY, DATED MAY 7, 2012.
- TELEPHONE AND ELECTRIC UTILITY MAPS WERE NOT AVAILABLE AT TIME OF SURVEY.
- PLEASE SEE SHEET 2 FOR COMMENCEMENT DETAIL.
- TREE SIZES AND SPECIES ARE THE BEST ESTIMATION OF THE FIELD SURVEYOR. SPECIFIC QUESTIONS REGARDING INDIVIDUAL TREES SHOULD BE DIRECTED TO A QUALIFIED FORESTER.
- MEASURED BEARINGS BASED UPON THE STATE PLANE COORDINATE SYSTEM.

BENCH MARK DATA

(N.G.V.D. 1929) DATUM

REFERENCE BENCH MARK NO. 1
TOP OF NORTH FLANGE BOLT ON HYDRANT.
ELEVATION=926.36'
(OUT OF SCOPE OF DRAWING.)

SITE BENCH MARK NO. 2
CUT "+" IN SOUTHWEST LIGHT POLE BASE IN PARKING LOT OF MEIJER STORE, +/– 340 FEET SOUTHWEST OF LOHR ROAD AND +/– 300 FEET SOUTHEAST OF ANN ARBOR–SALINE ROAD.
ELEVATION=928.45'

SITE BENCH MARK NO. 3
CUT "+" IN NORTHEAST LIGHT POLE BASE IN PARKING LOT OF MEIJER STORE, +/– 360 FEET NORTHEAST OF OAK VALLEY DRIVE AND +/– 320 FEET SOUTHEAST OF ANN ARBOR–SALINE ROAD.
ELEVATION=929.03'

NOTE: TO CONVERT ELEVATIONS TO NAVD 88, SUBTRACT 0.38' FROM SHOWN ELEVATIONS

UTILITY STATEMENT

THE U.G. UTILITIES SHOWN HAVE BEEN LOCATED FROM FIELD SURVEY INFORMATION AND EXISTING DRAWINGS. THE SURVEYOR MAKES NO GUARANTEES THAT THE U.G. UTILITIES SHOWN COMPRISE ALL SUCH UTILITIES IN THE AREA, EITHER IN SERVICE OR ABANDONED. THE SURVEYOR FURTHER DOES NOT WARRANT THAT THE U.G. UTILITIES SHOWN ARE IN THE EXACT LOCATION INDICATED ALTHOUGH HE DOES CERTIFY THAT THEY ARE LOCATED AS ACCURATELY AS POSSIBLE FROM INFORMATION AVAILABLE.

(R) = UTILITY SHOWN FROM RECORDS OR PLANS, & FIELD LOCATED WHERE POSSIBLE.

PRIOR TO THE PLANNED BUILDING IMPROVEMENTS, AND/ OR CONSTRUCTION, THE RESPECTIVE UTILITY COMPANIES MUST BE NOTIFIED TO STAKE THE PRECISE LOCATION OF THEIR UTILITIES.

giffels webster
Engineers
Surveyors
Planners
Landscape Architects
Environmental Specialists

1025 E. Maple Road
Suite 100
Birmingham, MI 48009
p (248) 852-3100
f (248) 852-6372
www.giffelswebster.com

Executive:	M.P.
Manager:	J.K.A.
Designer:	N.M.T.
Quality Control:	
Section:	7
	T-3-S R-6-E

Professional Seal:

Know what's below. Call before you dig.

DATE:	ISSUE:
06.26.2014	SUBMIT PRELIMINARY SITE PLAN
07.29.2014	RESUBMIT PRELIMINARY SITE PLAN WITH REVISED LAYOUT
09.03.2014	SUBMIT FINAL SITE PLAN

Developed For:
VERSA DEVELOPMENT

25900 W. 11 MILE ROAD
SUITE 250
SOUTHFIELD, MI 48034
(248) 416-1985

TOPOGRAPHIC SURVEY

VERSA PITTSFIELD PHASE 2

PITTSFIELD TOWNSHIP
WASHTENAW COUNTY
MICHIGAN

Date:	12.14.2012
Scale:	1" = 30'
Sheet:	2
Project:	18270.00

Copyright © 2012 Giffels Webster.
No reproduction shall be made without the prior written consent of Giffels Webster.

H:\18\18200\18270 Versa Pittsfield\Drawing Files\Engineering\Phase 2\02 Topo.dwg

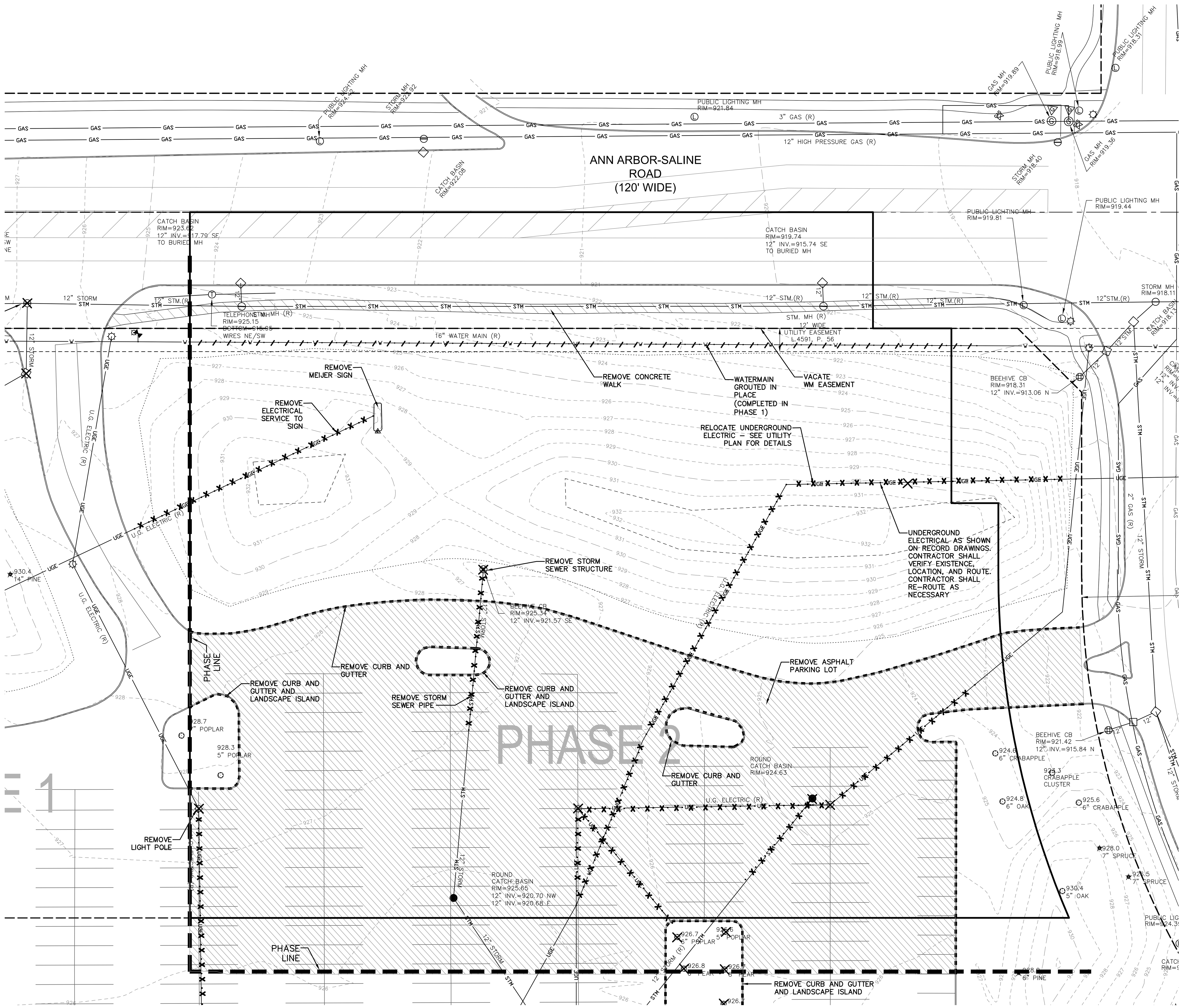

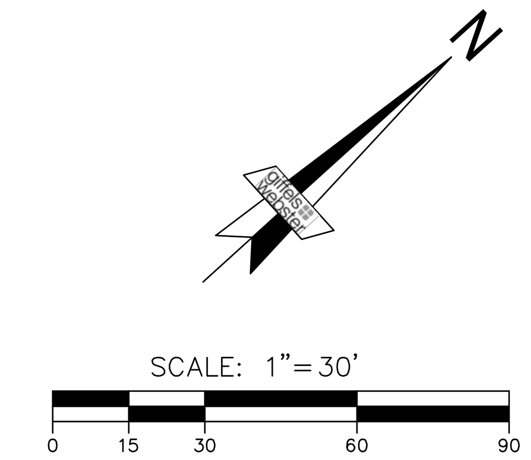

DEMOLITION LEGEND:

REMOVE OBJECT	X
REMOVE UTILITY	· X · X · X · X · X ·
ABANDON UTILITY PIPE	· / · / · / · / · / ·
CUT AND BULKHEAD UTILITY PIPE	⊠
REMOVE EXISTING CURB	- - - - - - - -
REMOVE ASPHALT PAVEMENT	(hatched box)
REMOVE CONCRETE SURFACE	(hatched box)

DEMOLITION NOTES:

1. REFER TO THE GENERAL NOTES FOR ADDITIONAL REQUIREMENTS AND RESPONSIBILITIES.
2. WITH THE EXCEPTION OF AN AMOUNT OF EXCAVATED MATERIALS SUFFICIENT FOR BACKFILLING AND CONSTRUCTION OF FILLS, ALL BROKEN CONCRETE, STONE AND EXCESS EXCAVATED MATERIALS SHALL BE DISPOSED OF BY THE CONTRACTOR.
3. THE CONTRACTOR WILL BE REQUIRED TO OBTAIN THEIR OWN DISPOSAL GROUND, AND WILL RECEIVE NO ADDITIONAL COMPENSATION FOR DISPOSING OF ANY OF THE EXCESS MATERIALS. MATERIALS ACCEPTABLE TO THE ENGINEER MAY BE DISPOSED OF ON-SITE AT THE CONTRACTORS EXPENSE IN A MANNER APPROVED IN ADVANCE BY THE ENGINEER.
4. THE EDGE OF EXISTING PAVEMENT SHALL BE CLEANED OF EARTH AND OTHER FOREIGN MATERIAL BEFORE ADJACENT POURS ARE PLACED.
5. EXISTING UTILITIES ON SITE WILL BE CAPPED OR BULK-HEADED AT THE MAIN IN ACCORDANCE WITH PITTSFIELD CHARTER TWP AND SERVICE PROVIDER STANDARDS. ALL BULKHEADING AND/OR SEWER PIPE REMOVAL NECESSITATED BY THE REMOVAL OF DRAINAGE STRUCTURES SHALL BE INCLUDED IN THE STRUCTURE REMOVAL.
6. THE CONTRACTOR SHALL COORDINATE WITH AFFECTED UTILITY COMPANIES FOR THE REMOVAL OR RELOCATION OF UTILITY AND LIGHT POLES.
7. STREET SIGNS IN THE WAY OF CONSTRUCTION WILL BE REMOVED AND RESET IMMEDIATELY IN A TEMPORARY LOCATION, AS APPROVED BY THE TOWNSHIP.
8. THE CONTRACTOR SHALL PROTECT ALL EXISTING SIGNS AND POSTS SCHEDULED TO REMAIN, AS DIRECTED BY THE TOWNSHIP.
9. ALL UNDERGROUND UTILITIES NOT INDICATED FOR REMOVAL SHALL BE PROTECTED THROUGHOUT CONSTRUCTION.
10. THE CONTRACTOR SHALL BE RESPONSIBLE FOR PROTECTING ALL PRIVATE PROPERTY (INCLUDING BUILDINGS AND FOUNDATIONS) THROUGHOUT CONSTRUCTION AND SHALL MAINTAIN SAFE PEDESTRIAN ACCESS AT ALL TIMES.
11. THE REMOVAL OF PAVEMENT, CURBS AND WALKS SHALL INCLUDE ALL REQUIRED SAWCUTTING. CURB REMOVAL IS INCIDENTAL TO PAVEMENT REMOVAL.

TREE NOTES:

1. NO TREES MEET HERITAGE TREE REQUIREMENTS.
2. ALL TREES ARE IN GOOD CONDITION.

DEMOLITION PHASING NOTES:

1. PHASE LINE REPRESENTS GENERAL LOCATION OF PHASE 1 & 2 WORK. SEE INDIVIDUAL SHEETS FOR WRITTEN DESCRIPTION OF WORK THAT WILL TAKE PLACE IN EACH PHASE.
2. DEMOLITION: CONTRACTOR SHALL REMOVE ALL DEMOLITION ITEMS LOCATED IN PHASE 1. DEMOLITION ITEMS LOCATED IN PHASE 2 AND REMOVED IN PHASE 1 INCLUDED: REMOVAL OF THE BERM, REMOVAL OF ADDITIONAL PAVEMENT NECESSARY FOR PHASE 1 CONSTRUCTION, AND REMOVAL OF THE WATERMAIN. MEIJER SIGN SHALL REMAIN IN PLACE UNTIL PHASE 2 CONSTRUCTION. ALL EXISTING STORM SEWER AND UNDERGROUND ELECTRICAL UTILITIES LOCATED IN PHASE 2 SHALL REMAIN IN PLACE UNTIL PHASE 2 CONSTRUCTION. CONTRACTOR SHALL ENSURE POWER REMAINS TO MEIJER SIGN. ELECTRICAL SHALL BE RELOCATED AS NECESSARY.

giffels webster
Engineers
Surveyors
Planners
Landscape Architects
Environmental Specialists

1025 E. Maple Road
Suite 100
Birmingham, MI 48009
p (248) 852-3100
f (248) 852-6372
www.giffelswebster.com

Executive:	M.P.
Manager:	J.K.A.
Designer:	N.M.T.
Quality Control:	
Section:	7
	T-3-S R-6-E

Professional Seal:

811 Know what's below. Call before you dig.

DATE:	ISSUE:
06.26.2014	SUBMIT PRELIMINARY SITE PLAN
07.29.2014	RESUBMIT PRELIMINARY SITE PLAN WITH REVISED LAYOUT
09.03.2014	SUBMIT FINAL SITE PLAN

Developed For:

VERSA DEVELOPMENT

25900 W. 11 MILE ROAD
SUITE 250
SOUTHFIELD, MI 48034
(248) 416-1985

DEMOLITION PLAN

VERSA PITTSFIELD PHASE 2

PITTSFIELD TOWNSHIP
WASHTENAW COUNTY
MICHIGAN

Date:	12.14.2012
Scale:	1" = 30'
Sheet:	3
Project:	18270.00

Copyright © 2012 Giffels Webster.
No reproduction shall be made without the prior written consent of Giffels Webster.

H:\18\18200\18270 Versa Pittsfield\Drawing Files\Engineering\Phase 2\03 Demolition.dwg

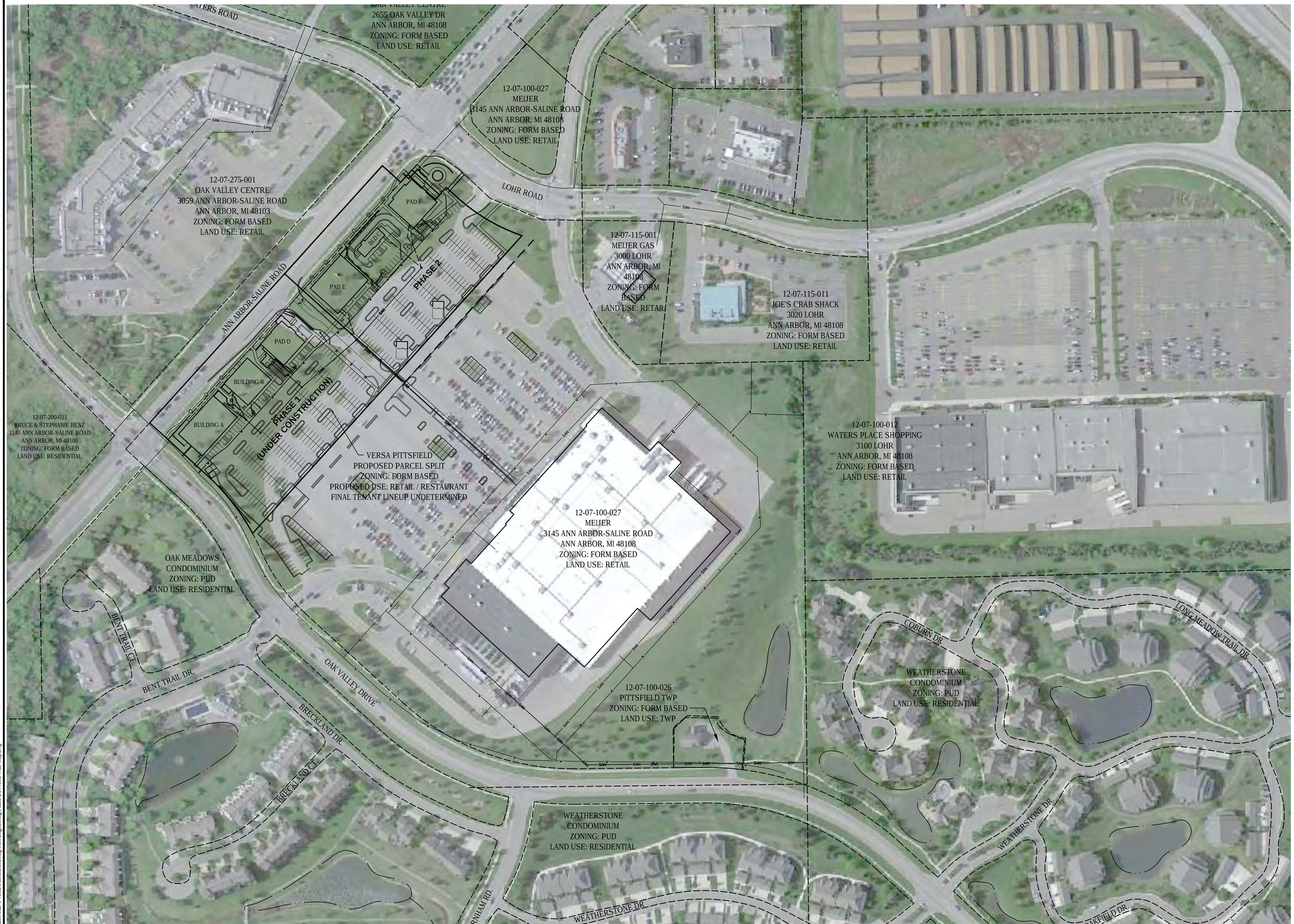

H:\18\18200\18270 Versa Pittsfield\Drawing Files\Engineering\Phase 2\04 Area Wide Map.dwg

giffels webster
Engineers
Surveyors
Planners
Landscape Architects
Environmental Specialists

1025 E. Maple Road
Suite 100
Birmingham, MI 48009
p (248) 852-3100
f (248) 852-6372
www.giffelswebster.com

Executive:	M.P.
Manager:	J.K.A.
Designer:	N.M.T.
Quality Control:	
Section:	7
	T-3-S R-6-E

Professional Seal:

811 Know what's below. Call before you dig.

DATE:	ISSUE:
06.26.2014	SUBMIT PRELIMINARY SITE PLAN
07.29.2014	RESUBMIT PRELIMINARY SITE PLAN WITH REVISED LAYOUT
09.03.2014	SUBMIT FINAL SITE PLAN

Developed For:

VERSA DEVELOPMENT

25900 W. 11 MILE ROAD
SUITE 250
SOUTHFIELD, MI 48034
(248) 416-1985

AREA WIDE MAP

VERSA PITTSFIELD PHASE 2

PITTSFIELD TOWNSHIP
WASHTENAW COUNTY
MICHIGAN

Date:	12.14.2012
Scale:	1" = 100'
Sheet:	4
Project:	18270.00

Copyright © 2012 Giffels Webster.
No reproduction shall be made without the prior written consent of Giffels Webster.

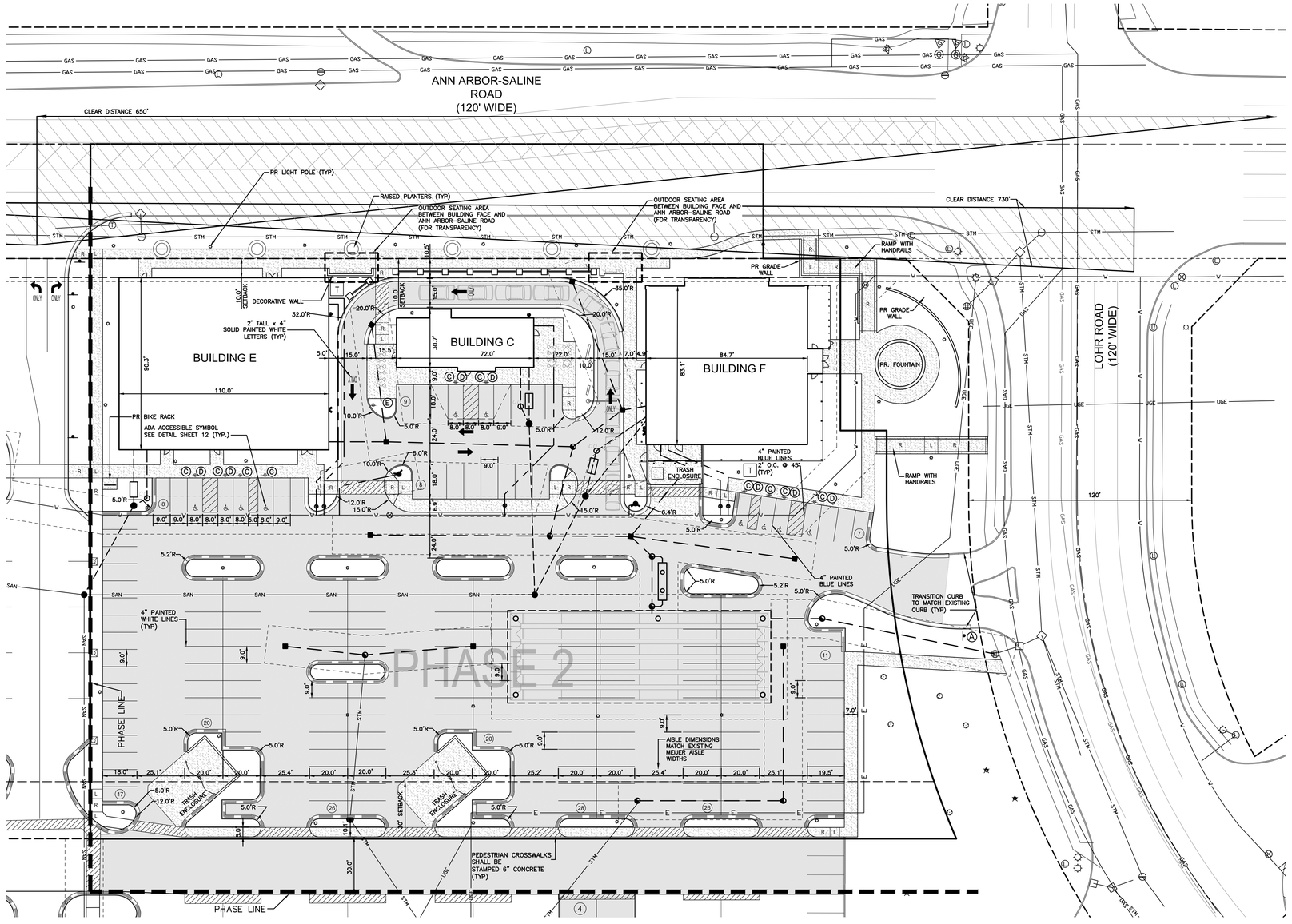

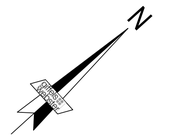

PAVING NOTES:

1. THE PAVING CONTRACTOR SHALL BE REQUIRED TO COORDINATE THE INSTALLATION OF GAS, ELECTRIC, PHONE, CABLE, SPRINKLERS, ETC. IN SUCH A MANNER THAT WILL FACILITATE THEIR PROPER INSTALLATION PRIOR TO PLACING THE PAVEMENT MATERIALS. ENSURE THAT ALL REQUIRED PIPES, CONDUITS, CABLES AND SLEEVES ARE PROPERLY PLACED AND THAT THE TRENCHES ARE PROPERLY BACKFILLED AND COMPACTED.
2. BUTT JOINTS SHALL BE PLACED AT ALL LOCATIONS WHERE AN EXISTING ASPHALT PAVEMENT SURFACE IS BEING DISTURBED BY REMOVALS AND/OR THE INSTALLATION OF NEW ASPHALT PAVEMENT.
3. ALL PAVEMENT AREAS SHOULD BE CLEARED AND GRUBBED BY REMOVING SURFACE VEGETATION, TOPSOIL, DEBRIS AND OTHER DELETERIOUS MATERIALS.
4. THE PLACEMENT OF THE FINAL ASPHALT LIFT SHALL BE DELAYED UNTIL THE MAJORITY OF THE CONSTRUCTION ACTIVITIES HAVE BEEN COMPLETED, OR AS APPROVED BY THE OWNER. A BOND COAT OF SS-1H EMULSION SHALL BE APPLIED (AT A RATE OF 0.10 GALLONS/S.Y.D.) BETWEEN THE LEVELING AND WEARING COURSE WHEN 48 HOURS HAVE ELAPSED BETWEEN PLACEMENTS.
5. THE FINAL SUB-GRADE SHALL BE THOROUGHLY PROOF-ROLLED UNDER THE OBSERVATION OF THE SOILS ENGINEER.
6. PROPOSED AGGREGATE BASE SHALL EXTEND A MINIMUM OF 1 FOOT BEYOND THE PAVEMENT EDGE/BACK OF CURB.
7. BARRIER FREE SIGNAGE SHALL BE PLACED IN FRONT OF EVERY DESIGNATED BARRIER FREE STALL. THE CONTRACTOR SHALL COORDINATE STANDARD AND VAN ACCESSIBILITY SIGNAGE AS INDICATED ON THE PLANS.
8. ALL BARRIER FREE RAMPS TO BE A.D.A. COMPLIANT.
9. GENERAL GRADING REQUIREMENTS ARE AS FOLLOWS:
   A. FINISH GRADE AT EXISTING BUILDING SHALL MATCH BRICK LEDGES, DOORWAYS OR BASEMENT WINDOWS
   B. MAINTAIN POSITIVE DRAINAGE AWAY FROM ALL BUILDING: 5% FOR FIRST 10' THEN 2% AFTER
   C. SIDEWALK CROSS SLOPE SHALL BE A MAXIMUM OF 2%
   D. PARKING LOT PAVEMENT SLOPES (1.0% MINIMUM, 4.0% MAXIMUM) UNIFORMLY BETWEEN FINISH GRADE ON PLANS
   E. LAWN AREAS 2% MINIMUM TO 25% (BERMS) MAXIMUM
10. REFER TO ARCHITECTURAL PLANS TO COORDINATE ALL:
    A. WATER SUPPLY, METERING, SPRINKLER AND FDC PIPING, DESIGN AND COORDINATION
    B. BUILDING SEWER, BUILDING DRAIN DESIGN AND CONNECTIONS TO CLEAN OUTS AND ROOF CONNECTORS
    C. GAS, ELECTRIC AND COMMUNICATION SERVICES AND LIGHTING DETAILS AND COORDINATION.
    D. ALL BUILDING ACCESS WALKS AND ENTRY DETAILS, INCLUDING SUPPORTED SLABS
    E. ALL WORK TO CONSTRUCT THE BUILDING AND ALL ITEMS CONNECTED TO IT
11. PRIOR TO THE PLACEMENT OF ANY BASE ASPHALT OR LEVELING COURSE, THE CURBS SHALL BE PARTIALLY BACKFILLED AND THE SUB-GRADE SHALL BE PROOF-ROLLED UNDER THE SUPERVISION OF THE SOILS ENGINEER.
12. ALL SIDEWALK AND PATHWAYS IN ANY PUBLIC R.O.W. SHALL BE INSPECTED BY THE AGENCY WITH JURISDICTION.
13. DIMENSION ARE TO FACE OF CURB.

LEGEND

- PROPERTY LINE
- EXIST. R.O.W.
- PR. GATE VALVE
- PR. HYDRANT ASSEMBLY W/ SHUT OFF
- PR. FDC
- PR. WATER MAIN
- PR. STORM SEWER CATCHBASIN
- PR. STORM SEWER MANHOLE
- PR. STORM SEWER END SECTION
- PR. 8"-10" RIP-RAP
- PR. STORM SEWER
- PR. SANITARY SEWER CLEANOUT
- PR. SANITARY SEWER MANHOLE
- PR. SANITARY SEWER
- PR. UNDERGROUND ELECTRICAL SERVICE
- PR. UNDERGROUND GAS SERVICE
- PR. UNDERGROUND TELEPHONE SERVICE
- PR. C.G.M.
- PR. UTILITY CROSSING
- PR. COUNTOUR MINOR
- PR. COUNTOUR MAJOR
- PR. SPOT ELEVATION
- PR. SWALE
- PR. CURB AND GUTTER
- PR. REVERSE CURB AND GUTTER
- PR. STANDARD DUTY ASPHALT
- PR. CONCRETE

TRAFFIC SIGNING:

ITEM	MMUTCD CODE	DESCRIPTION	SIZE	QUANTITY
(A)	R1-1	STOP	24x24	1
(C)	R7-8	HANDICAP PARKING ONLY (SEE DETAIL SHEET 12)	12x18	9
(D)	R7-8A	VAN ACCESSIBLE (SEE DETAIL SHEET 12)	12x6	5
(E)	R5-1	DO NOT ENTER	30x30	1

PHASING NOTES:

1. PHASE LINE REPRESENTS GENERAL LOCATION OF PHASE 1 & 2 WORK. SEE INDIVIDUAL SHEETS FOR WRITTEN DESCRIPTION OF WORK THAT WILL TAKE PLACE IN EACH PHASE.
2. PAVING: ALL PAVING (PARKING LOT, WALKS, ISLAND CONSTRUCTION) LOCATED IN PHASE 1, INCLUDING ALL MEIJER PARKING LOT IMPROVEMENTS, SHALL BE INSTALLED IN PHASE 1. ALL PAVING LOCATED IN PHASE 2 SHALL BE INSTALLED IN PHASE 2.
3. BUILDING CONSTRUCTION: BUILDINGS A, B, & D ARE PART OF PHASE 1. BUILDINGS C, E, & F ARE PART OF PHASE 2.

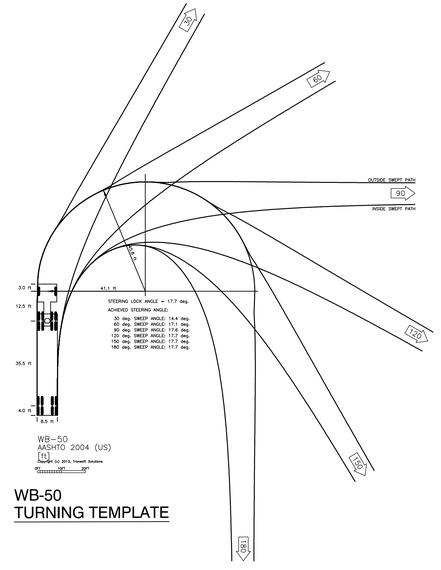

WB-50
TURNING TEMPLATE

giffels webster
Engineers
Surveyors
Planners
Landscape Architects
Environmental Specialists
1025 E. Maple Road
Suite 100
Birmingham, MI 48009
p (248) 852-3100
f (248) 852-6372
www.giffelswebster.com

Executive:	M.P.
Manager:	J.K.A.
Designer:	N.M.T.
Quality Control:	
Section:	7
	T-3-S R-6-E

Professional Seal:

811 Know what's below. Call before you dig.

DATE:	ISSUE:
06.26.2014	SUBMIT PRELIMINARY SITE PLAN
07.29.2014	RESUBMIT PRELIMINARY SITE PLAN WITH REVISED LAYOUT
09.03.2014	SUBMIT FINAL SITE PLAN

Developed For:

VERSA DEVELOPMENT
25900 W. 11 MILE ROAD
SUITE 250
SOUTHFIELD, MI 48034
(248) 416-1985

SITE / PAVING PLAN

VERSA PITTSFIELD PHASE 2

PITTSFIELD TOWNSHIP
WASHTENAW COUNTY
MICHIGAN

Date:	12.14.2012
Scale:	1" = 30'
Sheet:	5
Project:	18270.00

Copyright © 2012 Giffels Webster.
No reproduction shall be made without the prior written consent of Giffels Webster.

H:\18,18200-18270 Versa Pittsfield\Drawing Files\Engineering\Phase 2.05 Site-Paving Plan.dwg

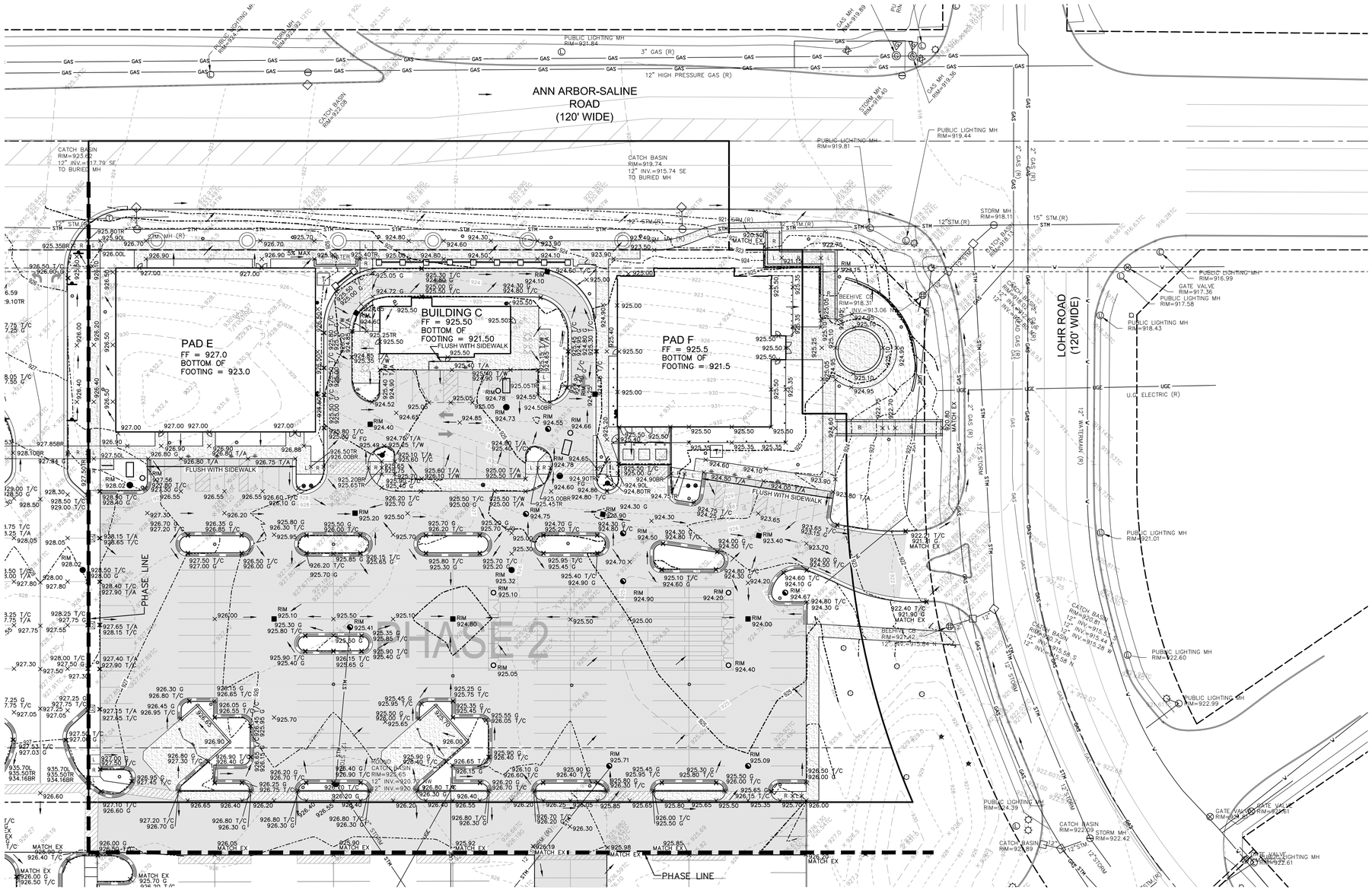

LEGEND

- PROPERTY LINE
- EXIST. R.O.W.
- PR. GATE VALVE
- PR. HYDRANT ASSEMBLY W/ SHUT OFF
- PR. FDC
- PR. WATER MAIN
- PR. STORM SEWER CATCHBASIN
- PR. STORM SEWER MANHOLE
- PR. STORM SEWER END SECTION
- PR. 8"-10" RIP-RAP
- PR. STORM SEWER
- PR. SANITARY SEWER CLEANOUT
- PR. SANITARY SEWER MANHOLE
- PR. SANITARY SEWER
- PR. UNDERGROUND ELECTRICAL SERVICE
- PR. UNDERGROUND GAS SERVICE
- PR. UNDERGROUND TELEPHONE SERVICE
- PR. C.G.M.
- PR. UTILITY CROSSING
- PR. COUNTOUR MINOR
- PR. COUNTOUR MAJOR
- PR. SPOT ELEVATION
- PR. SWALE
- PR. CURB AND GUTTER
- PR. REVERSE CURB AND GUTTER

GRADING NOTES:

1. REFER TO THE GENERAL NOTES FOR ADDITIONAL REQUIREMENTS AND RESPONSIBILITIES.
2. THE FINAL SUB-GRADE SHALL BE THOROUGHLY PROOF-ROLLED UNDER THE OBSERVATION OF THE SOILS ENGINEER.
3. ALL TRENCHES WITHIN A ONE ON ONE SLOPE OF PAVEMENT SHALL BE BACKFILLED WITH SAND (MDOT CLASS II MINIMUM) AND MECHANICALLY COMPACTED IN NOT MORE THAN 9" LAYER TO 95% MAXIMUM DRY DENSITY PER MODIFIED PROCTER COMPACTION TEST ASTM D-1557.
4. NO FROZEN MATERIAL SHALL BE PERMITTED AS BACKFILL UNDER ANY ROADWAY, DRIVEWAY OR PARKING AREA.
5. PRIOR TO THE START OF ANY FILLING, THE CONTRACTOR SHALL REMOVE ALL TOPSOIL AND ALL OTHER UNACCEPTABLE SOIL FROM THE FILL AREAS, AND PROPERLY BACKFILL WITH ACCEPTABLE SOIL.
6. ALL BARRIER FREE RAMPS TO BE A.D.A. COMPLIANT.
7. GENERAL GRADING REQUIREMENTS ARE AS FOLLOWS:
   A. FINISH GRADE AT EXISTING BUILDING SHALL MATCH BRICK LEDGES, DOORWAYS OR BASEMENT WINDOWS
   B. MAINTAIN POSITIVE DRAINAGE AWAY FROM ALL BUILDING: 5% WITHIN THE FIRST 10' AND 2% AFTER.
   C. SIDEWALK CROSS SLOPE SHALL BE NO MORE THAN 2%.
   D. PAVEMENT SLOPES (1.0% MINIMUM, 4.0% MAXIMUM) UNIFORMLY BETWEEN FINISH GRADE ON PLANS
   E. LAWN AREAS ± 2% MINIMUM TO 25% (BERMS) MAXIMUM
8. GRADES ARE NOTED AS FOLLOWS: TC - TOP OF CURB, TP - TOP OF PAVEMENT, TW - TOP OF WALK.
9. REFER TO ARCHITECTURAL PLANS TO COORDINATE ALL:
   A. WATER SUPPLY, METERING, SPRINKLER AND FDC PIPING, DESIGN AND COORDINATION
   B. BUILDING SEWER, BUILDING DRAIN DESIGN AND CONNECTIONS TO CLEAN OUTS AND ROOF CONNECTORS
   C. GAS, ELECTRIC AND COMMUNICATION SERVICES AND LIGHTING DETAILS AND COORDINATION.
   D. ALL BUILDING ACCESS WALKS AND ENTRY DETAILS, INCLUDING SUPPORTED SLABS
   E. ALL WORK TO CONSTRUCT THE BUILDING AND ALL ITEMS CONNECTED TO IT
10. PRIOR TO THE PLACEMENT OF ANY BASE ASPHALT OR LEVELING COURSE, THE CURBS SHALL BE PARTIALLY BACKFILLED AND THE SUB-GRADE SHALL BE PROOF-ROLLED UNDER THE SUPERVISION OF THE SOILS ENGINEER.
11. ALL SIDEWALK AND PATHWAYS IN ANY PUBLIC R.O.W. SHALL BE INSPECTED BY THE AGENCY WITH JURISDICTION.
12. SIGNED AND SEALED RETAINING WALL DESIGN AND DETAILS SHALL BE PROVIDED PRIOR TO THE PRECONSTRUCTION MEETING.

PHASING NOTES:

1. PHASE LINE REPRESENTS GENERAL LOCATION OF PHASE 1 & 2 WORK. SEE INDIVIDUAL SHEETS FOR WRITTEN DESCRIPTION OF WORK THAT WILL TAKE PLACE IN EACH PHASE.
2. GRADING: CONTRACTOR SHALL GRADE ALL AREAS NECESSARY FOR PHASE 1 CONSTRUCTION. CONTRACTOR SHALL ALSO REMOVE THE BERM LOCATED IN PHASE 2. AFTER REMOVING THE BERM, CONTRACTOR SHALL ENSURE PROPER DRAINAGE IN THE AREA OF THE BERM UNTIL PHASE 2 CONSTRUCTION COMMENCES. THERE ARE 2 EXISTING DRAINAGE STRUCTURES IN THIS AREA THAT SHALL BE USED TO CONVEY DRAINAGE.
3. PAVING: ALL PAVING (PARKING LOT, WALKS, ISLAND CONSTRUCTION) LOCATED IN PHASE 1, INCLUDING ALL MEIJER PARKING LOT IMPROVEMENTS, SHALL BE INSTALLED IN PHASE 1. ALL PAVING LOCATED IN PHASE 2 SHALL BE INSTALLED IN PHASE 2.
4. BUILDING CONSTRUCTION: BUILDINGS A, B, & D ARE PART OF PHASE 1. BUILDINGS C, E, & F ARE PART OF PHASE 2.

giffels webster
Engineers
Surveyors
Planners
Landscape Architects
Environmental Specialists

1025 E. Maple Road
Suite 100
Birmingham, MI 48009
p (248) 852-3100
f (248) 852-6372
www.giffelswebster.com

Executive:	M.P.
Manager:	J.K.A.
Designer:	N.M.T.
Quality Control:	
Section:	7
	T-3-S R-6-E

Professional Seal:

811 Know what's below. Call before you dig.

DATE:	ISSUE:
06.26.2014	SUBMIT PRELIMINARY SITE PLAN
07.29.2014	RESUBMIT PRELIMINARY SITE PLAN WITH REVISED LAYOUT
09.03.2014	SUBMIT FINAL SITE PLAN

Developed For:

VERSA DEVELOPMENT

25900 W. 11 MILE ROAD
SUITE 250
SOUTHFIELD, MI 48034
(248) 416-1985

GRADING PLAN

VERSA PITTSFIELD PHASE 2

PITTSFIELD TOWNSHIP
WASHTENAW COUNTY
MICHIGAN

SCALE: 1"= 30'
0 15 30 60 90

Date:	12.14.2012
Scale:	1" = 30'
Sheet:	6
Project:	18270.00

Copyright © 2012 Giffels Webster.
No reproduction shall be made without the prior written consent of Giffels Webster.

H:\18\18200.18270 Versa Pittsfield\Drawing Files\Engineering\Phase 2\06 Grading Plan.dwg

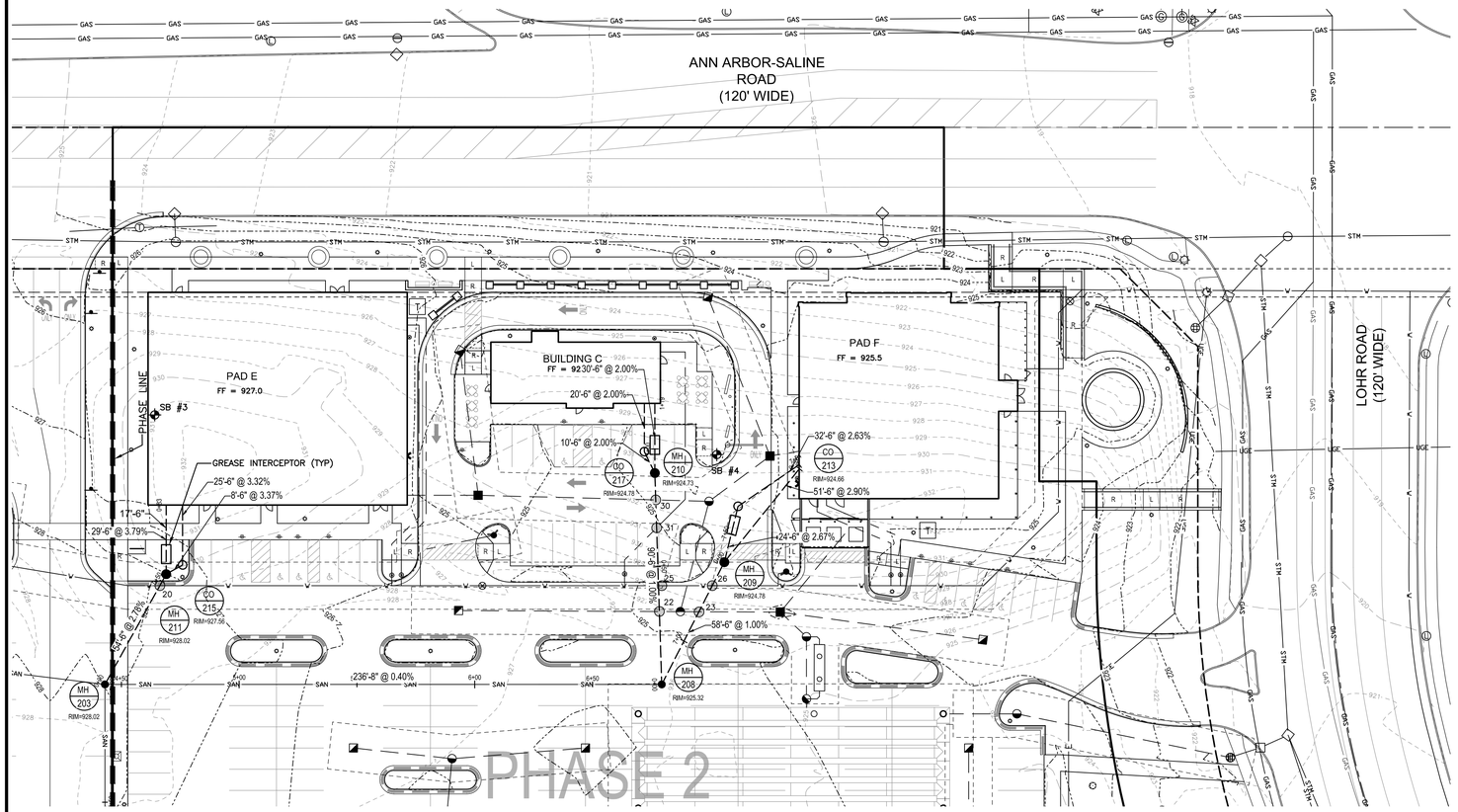

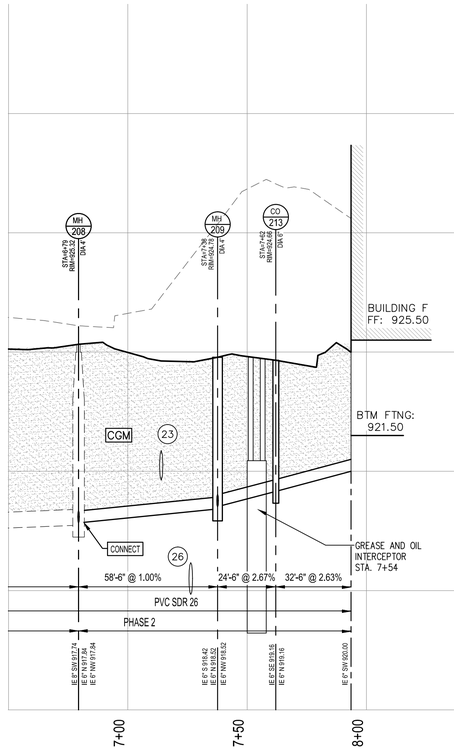

BUILDING F - GREASE

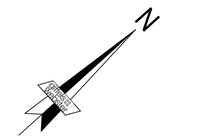

COMPACTION NOTE:

COMPACTION OF TRENCHES IS REQUIRED IN ROADWAY CORRIDORS, SIDEWALKS AND PARKING LOTS. (CLASS II GRANULAR BACKFILL AT 95% COMPACTION)

GREASE INTERCEPTOR:

GREASE INTERCEPTORS SHALL BE CHECKED ONCE YEARLY AND SUBMITTED TO TOWNSHIP ENGINEER.

PERSON RESPONSIBLE:
LISA DAVIS,
HEAD OF PROPERTY MAINTENANCE

MATERIALS:

1. SANITARY SEWER: 6" LEADS - SDR 26 PVC
   SANITARY SEWER MANHOLES SHALL NOT HAVE SUMPS UNLESS NOTED
2. GREASE INTERCEPTOR:
   CONCRETE GREASE INTERCEPTOR

CGM - COMPACTED CL II GRANULAR MATERIAL

PHASING NOTES:

PHASE LINE REPRESENTS GENERAL LOCATION OF PHASE 1 & 2 WORK. SEE INDIVIDUAL SHEETS FOR WRITTEN DESCRIPTION OF WORK THAT WILL TAKE PLACE IN EACH PHASE.

1. SANITARY SEWER: ALL 8" SANITARY SEWER MAIN SHALL BE INSTALLED IN PHASE 1. SANITARY SEWER LEADS FOR BUILDINGS A, B, & D SHALL BE INSTALLED IN PHASE 1. SANITARY SEWER LEADS FOR BUILDINGS C, E, & F SHALL BE INSTALLED IN PHASE 2. SEE SANITARY SEWER PROFILES FOR LABELS INDICATING PHASE 1 & 2 WORK.
2. BUILDING CONSTRUCTION: BUILDINGS A, B, & D ARE PART OF PHASE 1. BUILDINGS C, E, & F ARE PART OF PHASE 2.

CONNECT NOTE:

CONTRACTOR SHALL EXPOSE EXISTING UTILITIES AT CONNECTIONS AND CROSSINGS AND SUPPLY ELEVATIONS AND LOCATIONS TO THE DESIGN ENGINEER TO CONFIRM OR ADJUST DESIGN.

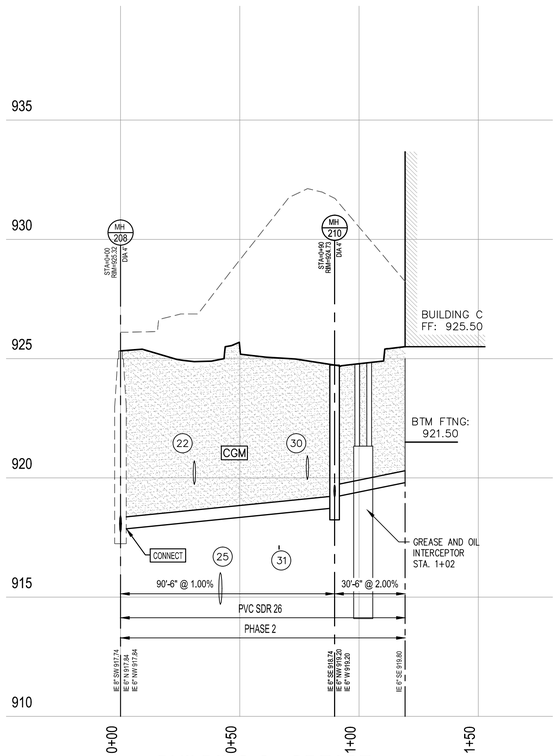

BUILDING C - GREASE

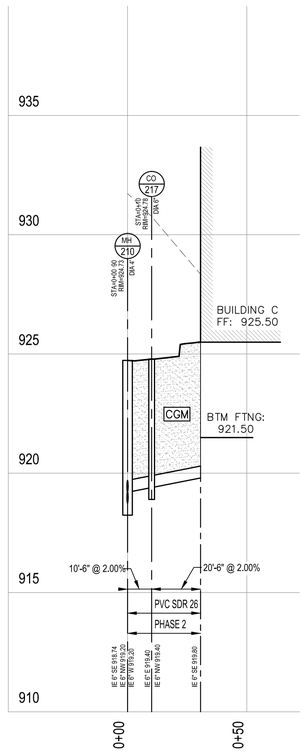

BUILDING C - NO GREASE

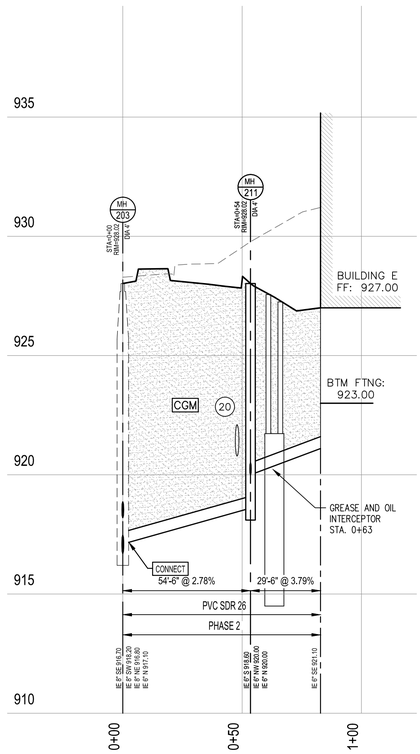

BUILDING E - GREASE

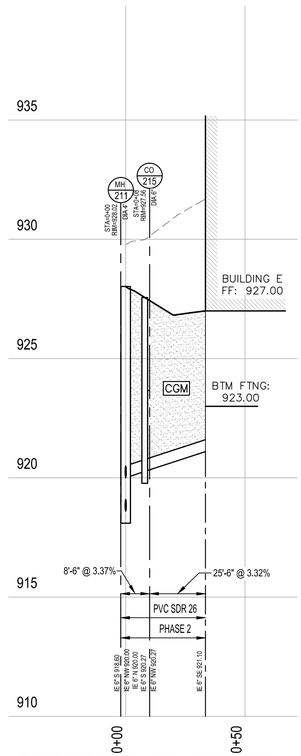

BUILDING E - NO GREASE

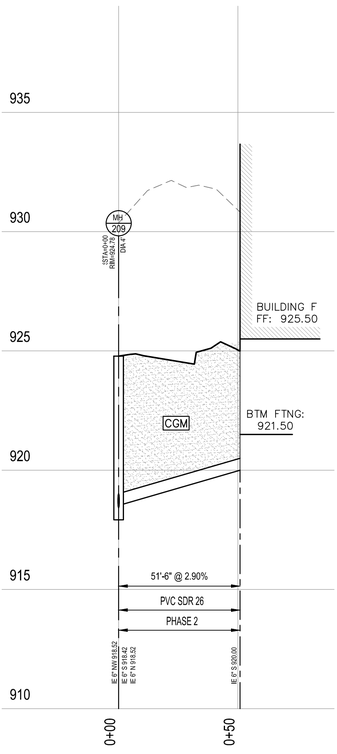

BUILDING F - NO GREASE

giffels webster
Engineers
Surveyors
Planners
Landscape Architects
Environmental Specialists

1025 E. Maple Road
Suite 100
Birmingham, MI 48009
p (248) 852-3100
f (248) 852-6372
www.giffelswebster.com

Executive:	M.P.
Manager:	J.K.A.
Designer:	N.M.T.
Quality Control:	
Section:	7
	T-3-S R-6-E

Professional Seal:

811 Know what's below. Call before you dig.

DATE:	ISSUE:
06.26.2014	SUBMIT PRELIMINARY SITE PLAN
07.29.2014	RESUBMIT PRELIMINARY SITE PLAN WITH REVISED LAYOUT
09.03.2014	SUBMIT FINAL SITE PLAN

Developed For:

VERSA DEVELOPMENT

25900 W. 11 MILE ROAD
SUITE 250
SOUTHFIELD, MI 48034
(248) 416-1985

SANITARY LEAD PLAN AND PROFILES

VERSA PITTSFIELD PHASE 2

PITTSFIELD TOWNSHIP
WASHTENAW COUNTY
MICHIGAN

Date:	12.14.2012
Scale:	H: 1" = 30' V: 1" = 3'
Sheet:	7
Project:	18270.00

Copyright © 2012 Giffels Webster.
No reproduction shall be made without the prior written consent of Giffels Webster.

H:\18\18200\18270 Versa Pittsfield\Drawing Files\Engineering\Phase 2\07 Sanitary Plan.dwg

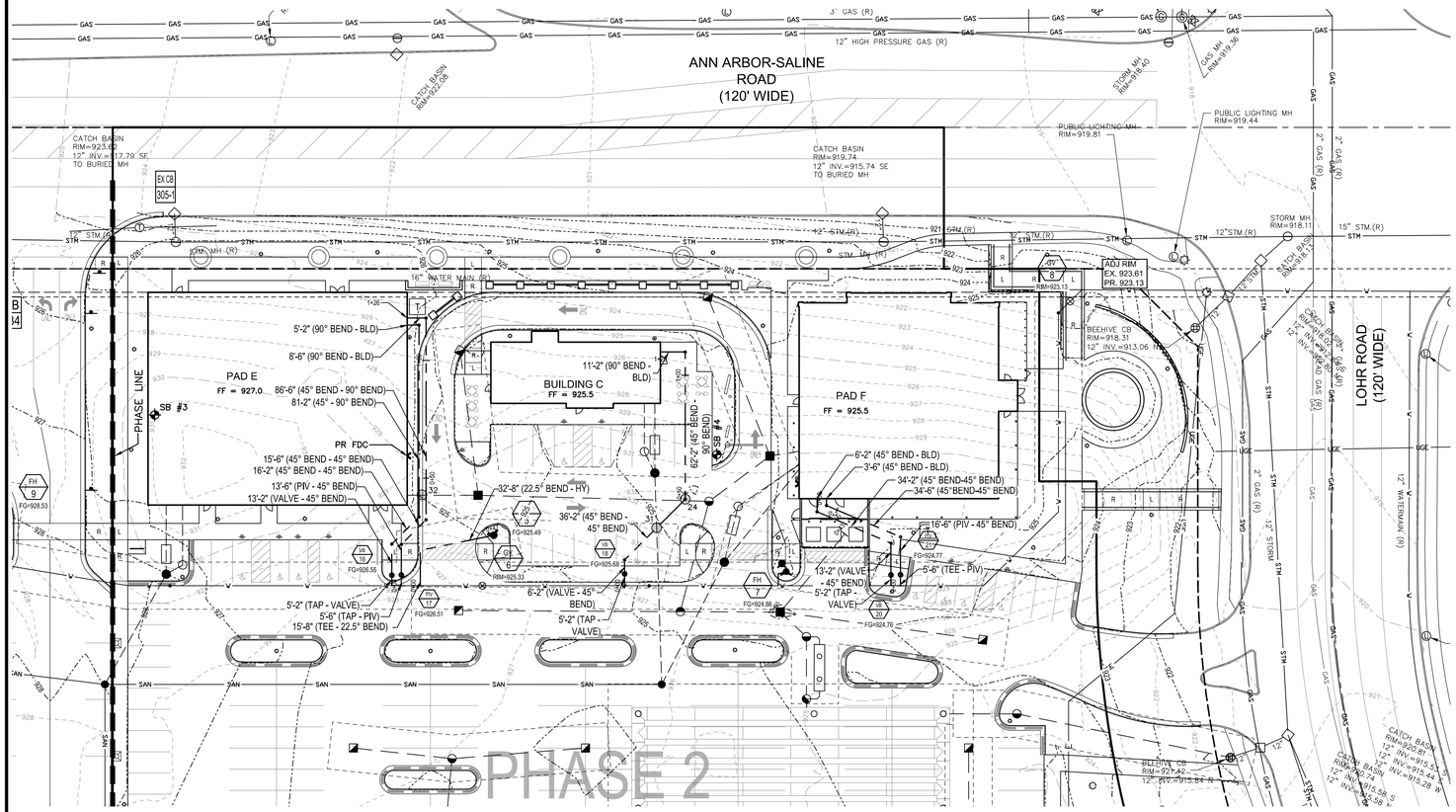

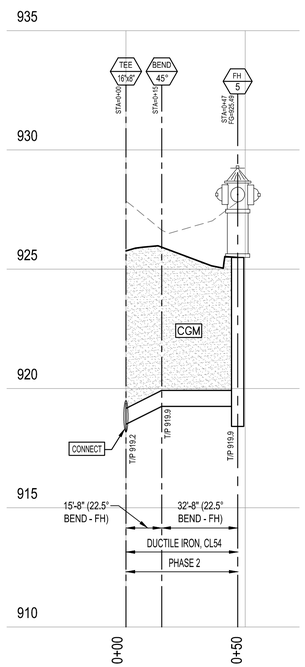

FH 205

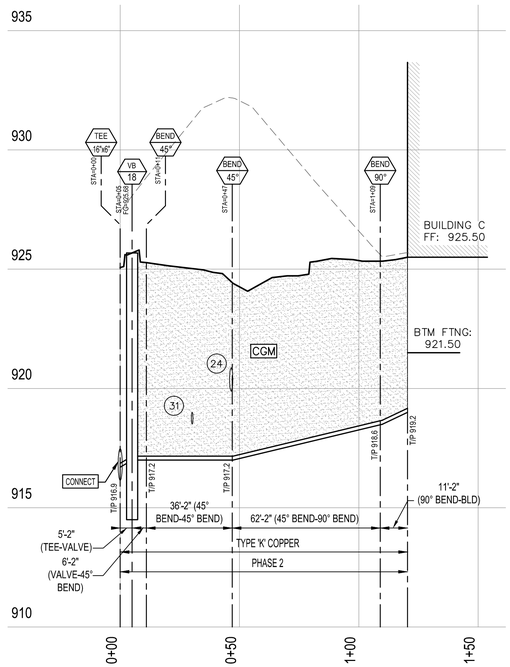

BUILDING C

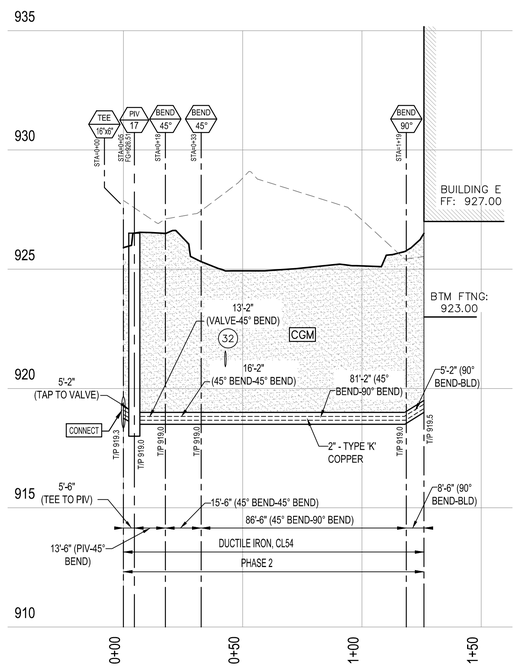

BUILDING E

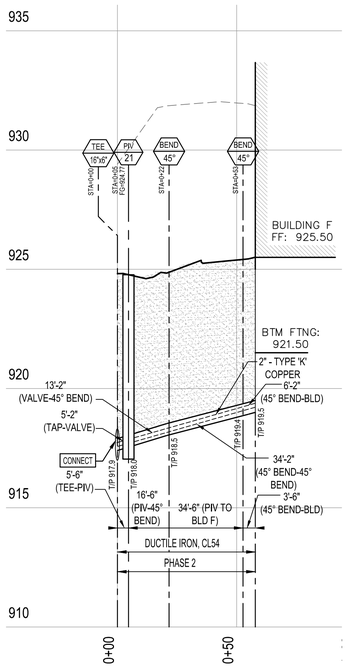

BUILDING F

giffels webster

Engineers
Surveyors
Planners
Landscape Architects
Environmental Specialists

1025 E. Maple Road
Suite 100
Birmingham, MI 48009
p (248) 852-3100
f (248) 852-6372
www.giffelswebster.com

SCALE: 1"= 30'

0 15 30 60 90

COMPACTION NOTE:

COMPACTION OF TRENCHES IS REQUIRED IN ROADWAY CORRIDORS, SIDEWALKS AND PARKING LOTS. (CLASS II GRANULAR BACKFILL AT 95% COMPACTION)

MATERIALS:

1. WATERMAIN: 8", 6" - DUCTILE IRON CL 54 DOUBLE CEMENT LINED
   8" PIPE SHALL HAVE TRACER WIRE
   2" - TYPE 'K' COPPER -DOMESTIC
   ALL WATERMAIN SHALL BE RESTRAINED PER DIPRA STANDARDS

CGM - COMPACTED CL II GRANULAR MATERIAL

PHASING NOTES:

PHASE LINE REPRESENTS GENERAL LOCATION OF PHASE 1 & 2 WORK. SEE INDIVIDUAL SHEETS FOR WRITTEN DESCRIPTION OF WORK THAT WILL TAKE PLACE IN EACH PHASE.

1. WATERMAIN: ALL 16" WATERMAIN AND HYDRANTS SHALL BE INSTALLED IN PHASE 1. WATER LEADS FOR BUILDINGS A, B & D SHALL BE INSTALLED IN PHASE 1. WATER LEADS FOR BUILDINGS C, E & F SHALL BE INSTALLED IN PHASE 2. SEE WATERMAIN PROVILES FOR LABELS INDICATING PHASE 1 & 2 WORK.
2. BUILDING CONSTRUCTION: BUILDINGS A, B, & D ARE PART OF PHASE 1. BUILDINGS C, E, & F ARE PART OF PHASE 2.

CONNECT NOTE:

CONTRACTOR SHALL EXPOSE EXISTING UTILITIES AT CONNECTIONS AND CROSSINGS AND SUPPLY ELEVATIONS AND LOCATIONS TO THE DESIGN ENGINEER TO CONFIRM OR ADJUST DESIGN.

Executive:	M.P.
Manager:	J.K.A.
Designer:	N.M.T.
Quality Control:	
Section:	7
	T-3-S R-6-E

Professional Seal:

811 Know what's below. Call before you dig.

DATE:	ISSUE:
06.26.2014	SUBMIT PRELIMINARY SITE PLAN
07.29.2014	RESUBMIT PRELIMINARY SITE PLAN WITH REVISED LAYOUT
09.03.2014	SUBMIT FINAL SITE PLAN

Developed For:

VERSA DEVELOPMENT

25900 W. 11 MILE ROAD
SUITE 250
SOUTHFIELD, MI 48034
(248) 416-1985

WATERMAIN PLAN AND PROFILES

VERSA PITTSFIELD PHASE 2

PITTSFIELD TOWNSHIP
WASHTENAW COUNTY
MICHIGAN

Date:	12.14.2012
Scale:	H: 1" = 30' V: 1" = 3'
Sheet:	8
Project:	18270.00

Copyright © 2012 Giffels Webster.
No reproduction shall be made without the prior written consent of Giffels Webster.

H:\18\18200\18270 Versa Pittsfield\Drawing Files\Engineering\Phase 2\08 WM Plan.dwg

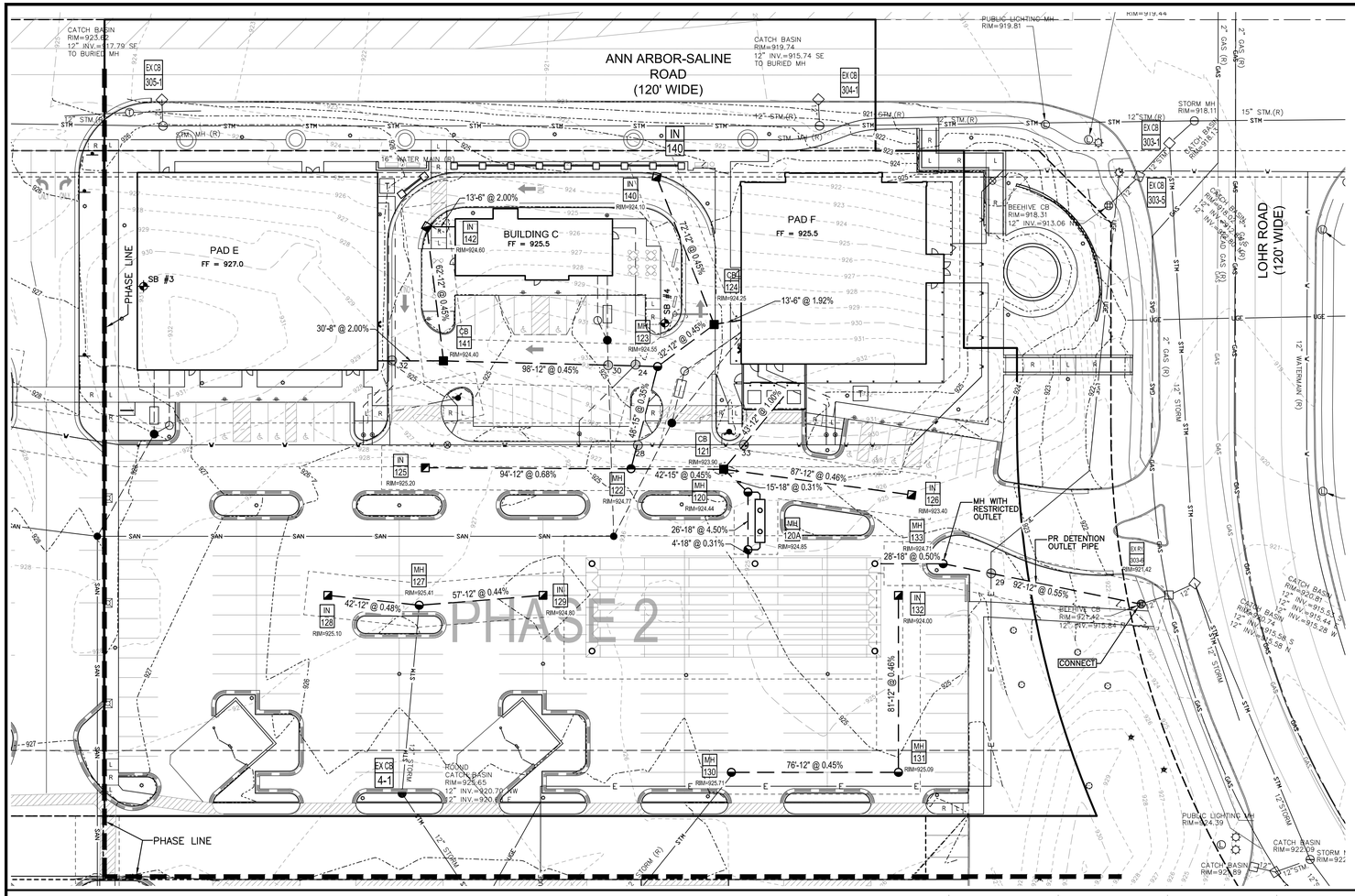

COMPACTION NOTE:

COMPACTION OF TRENCHES IS REQUIRED IN ROADWAY CORRIDORS, SIDEWALKS AND PARKING LOTS. (CLASS II GRANULAR BACKFILL AT 95% COMPACTION)

MATERIALS:

1. STORM SEWER: RCP, C76, CL IV
   ROOF DRAIN LEADS - 6" - PVC, SCH 40
   UNDERGROUND DETENTION - HDPE

CGM - COMPACTED CL II GRANULAR MATERIAL

PHASING NOTES:

PHASE LINE REPRESENTS GENERAL LOCATION OF PHASE 1 & 2 WORK. SEE INDIVIDUAL SHEETS FOR WRITTEN DESCRIPTION OF WORK THAT WILL TAKE PLACE IN EACH PHASE.

1. STORM SEWER: ALL STORM SEWER LOCATED IN PHASE 1 SHALL BE INSTALLED IN PHASE 1. ALL STORM SEWER LOCATED IN PHASE 2 SHALL BE INSTALLED IN PHASE 2. SEE STORM SEWER PROFILES FOR LABELS INDICATING PHASE 1 & 2 WORK.
2. BUILDING CONSTRUCTION: BUILDINGS A, B, & D ARE PART OF PHASE 1. BUILDINGS C, E, & F ARE PART OF PHASE 2.

CONNECT NOTE:

CONTRACTOR SHALL EXPOSE EXISTING UTILITIES AT CONNECTIONS AND CROSSINGS AND SUPPLY ELEVATIONS AND LOCATIONS TO THE DESIGN ENGINEER TO CONFIRM OR ADJUST DESIGN.

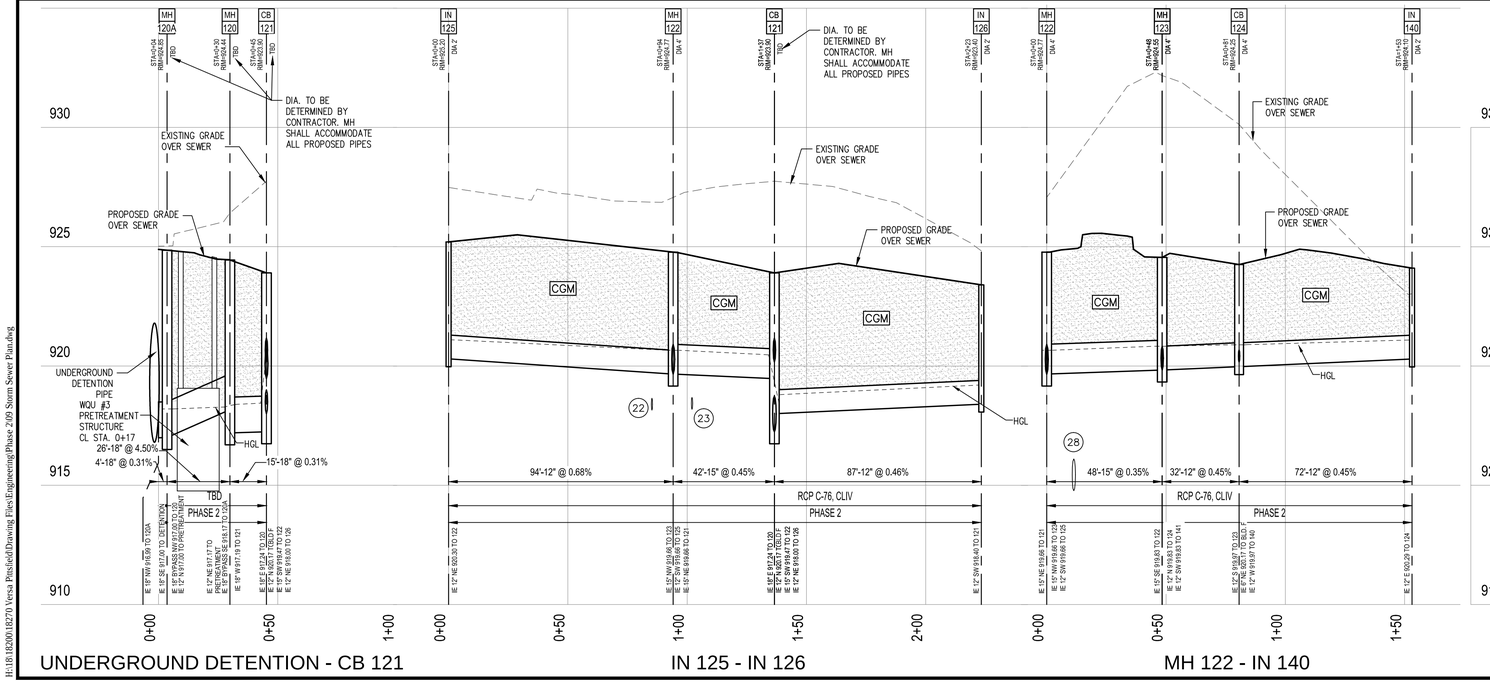

giffels webster
Engineers
Surveyors
Planners
Landscape Architects
Environmental Specialists

1025 E. Maple Road
Suite 100
Birmingham, MI 48009
p (248) 852-3100
f (248) 852-6372
www.giffelswebster.com

Executive:	M.P.
Manager:	J.K.A.
Designer:	N.M.T.
Quality Control:	
Section:	7
	T-3-S R-6-E

Professional Seal:

811 Know what's below. Call before you dig.

DATE:	ISSUE:
06.26.2014	SUBMIT PRELIMINARY SITE PLAN
07.29.2014	RESUBMIT PRELIMINARY SITE PLAN WITH REVISED LAYOUT
09.03.2014	SUBMIT FINAL SITE PLAN

Developed For:

VERSA DEVELOPMENT

25900 W. 11 MILE ROAD
SUITE 250
SOUTHFIELD, MI 48034
(248) 416-1985

STORM SEWER PLAN AND PROFILES

VERSA PITTSFIELD PHASE 2

PITTSFIELD TOWNSHIP
WASHTENAW COUNTY
MICHIGAN

Date:	12.14.2012
Scale:	H: 1" = 30' V: 1" = 3'
Sheet:	9
Project:	18270.00

Copyright © 2013 Giffels Webster.
No reproduction shall be made without the prior written consent of Giffels Webster.

H:\18\18200\18270 Versa Pittsfield\Drawing Files\Engineering\Phase 2\09 Storm Sewer Plan.dwg

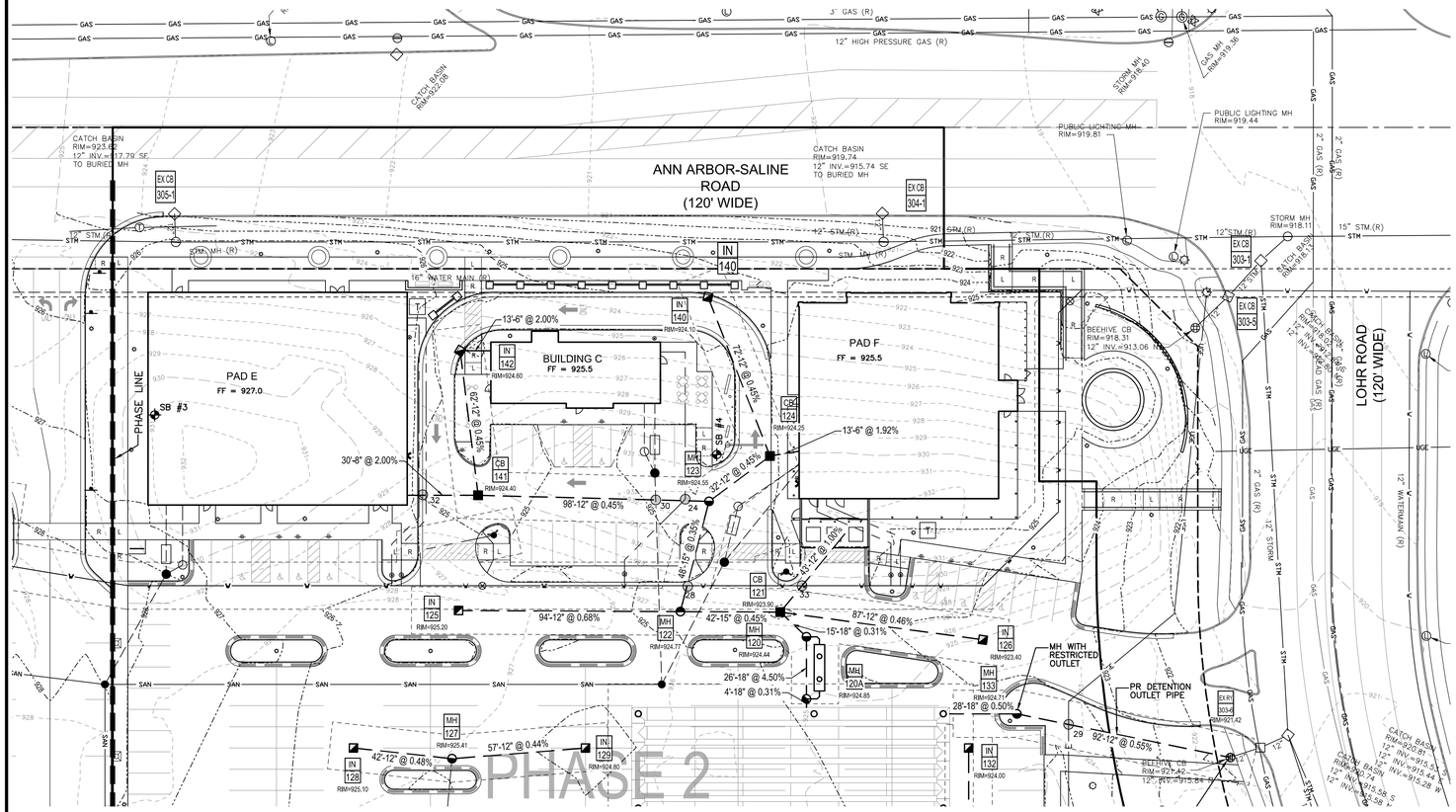

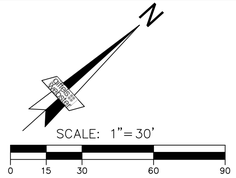

COMPACTION NOTE:

COMPACTION OF TRENCHES IS REQUIRED IN ROADWAY CORRIDORS, SIDEWALKS AND PARKING LOTS. (CLASS II GRANULAR BACKFILL AT 95% COMPACTION)

MATERIALS:

1. STORM SEWER: RCP, C76, CL IV
   ROOF DRAIN LEADS - 6" - PVC, SCH 40
   UNDERGROUND DETENTION - HDPE

CGM - COMPACTED CL II GRANULAR MATERIAL

PHASING NOTES:

PHASE LINE REPRESENTS GENERAL LOCATION OF PHASE 1 & 2 WORK. SEE INDIVIDUAL SHEETS FOR WRITTEN DESCRIPTION OF WORK THAT WILL TAKE PLACE IN EACH PHASE.

1. STORM SEWER: ALL STORM SEWER LOCATED IN PHASE 1 SHALL BE INSTALLED IN PHASE 1. ALL STORM SEWER LOCATED IN PHASE 2 SHALL BE INSTALLED IN PHASE 2. SEE STORM SEWER PROFILES FOR LABELS INDICATING PHASE 1 & 2 WORK.
2. BUILDING CONSTRUCTION: BUILDINGS A, B, & D ARE PART OF PHASE 1. BUILDINGS C, E, & F ARE PART OF PHASE 2.

CONNECT NOTE:

CONTRACTOR SHALL EXPOSE EXISTING UTILITIES AT CONNECTIONS AND CROSSINGS AND SUPPLY ELEVATIONS AND LOCATIONS TO THE DESIGN ENGINEER TO CONFIRM OR ADJUST DESIGN.

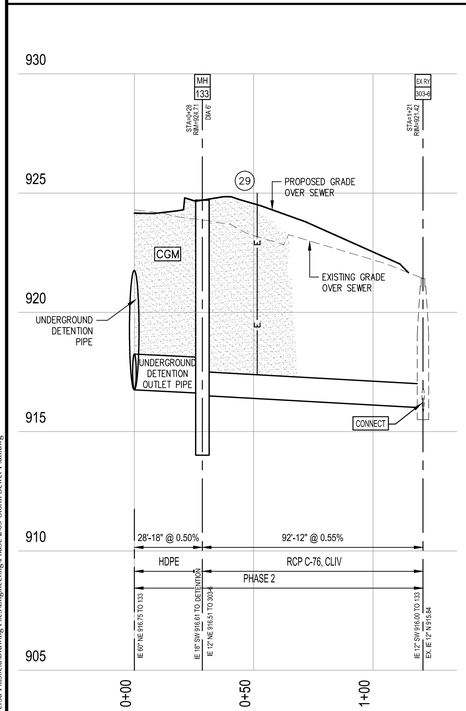

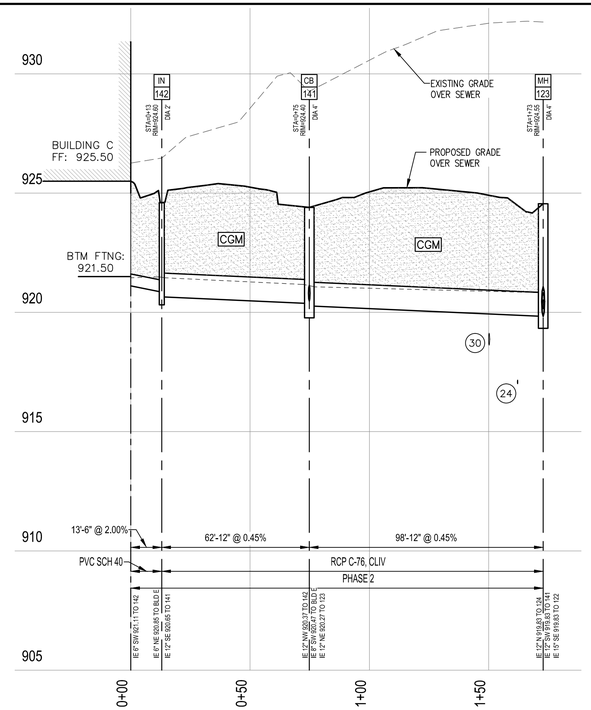

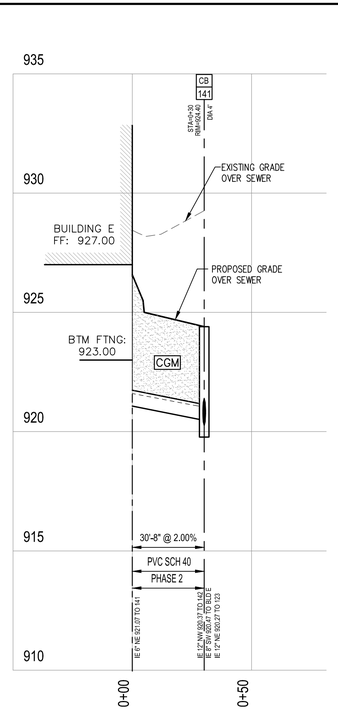

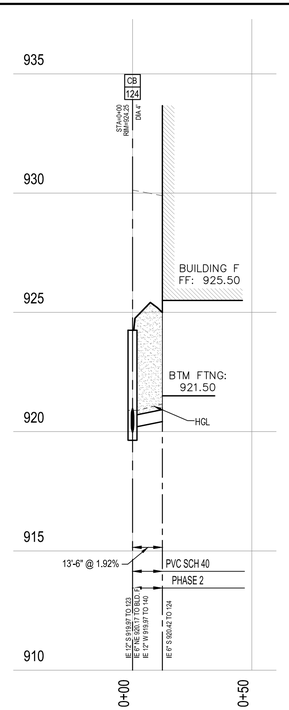

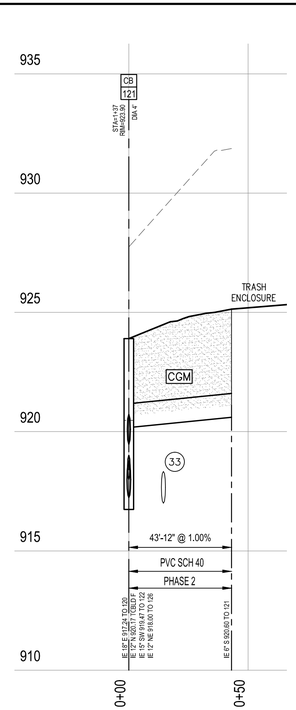

giffels webster
Engineers
Surveyors
Planners
Landscape Architects
Environmental Specialists
1025 E. Maple Road
Suite 100
Birmingham, MI 48009
p (248) 852-3100
f (248) 852-6372
www.giffelswebster.com

Executive:	M.P.
Manager:	J.K.A.
Designer:	N.M.T.
Quality Control:	
Section:	7
	T-3-S R-6-E

Professional Seal:

811 Know what's below. Call before you dig.

DATE:	ISSUE:
06.26.2014	SUBMIT PRELIMINARY SITE PLAN
07.29.2014	RESUBMIT PRELIMINARY SITE PLAN WITH REVISED LAYOUT
09.03.2014	SUBMIT FINAL SITE PLAN

Developed For:

VERSA DEVELOPMENT

25900 W. 11 MILE ROAD
SUITE 250
SOUTHFIELD, MI 48034
(248) 416-1985

STORM SEWER PLAN AND PROFILES

VERSA PITTSFIELD PHASE 2

PITTSFIELD TOWNSHIP
WASHTENAW COUNTY
MICHIGAN

Date:	12.14.2012
Scale:	H: 1" = 30' V: 1" = 3'
Sheet:	10
Project:	18270.00

Copyright © 2012 Giffels Webster.
No reproduction shall be made without the prior written consent of Giffels Webster.

H:\18\18200\18270 Versa Pittsfield\Drawing Files\Engineering\Phase 2\09 Storm Sewer Plan.dwg

Sanitary Sewer Structure Table
Versa Pittsfield
18270.00

Prepared By NMT
Working Date September 5, 2015

Structure	Type	Details	Depth	Invert(s)	Casting
209	MH	RIM : 924.78 DIA : 4'	6.36'	IE 6" S 918.42 TO 208 IE 6" N 918.52 TO BLD F IE 6" NW 918.52 TO 213	EJIW 1040
210	MH	RIM : 924.73 DIA : 4'	5.99'	IE 6" SE 918.74 TO 208 IE 6" NW 919.20 TO BLD C IE 6" W 919.20 TO 217	EJIW 1040
211	MH	RIM : 928.02 DIA : 4'	9.42'	IE 6" S 918.60 TO 203 IE 6" NW 920.00 TO BLD E IE 6" N 920.00 TO 215	EJIW 1040
213	CO	RIM : 924.66 DIA : 6"	5.50'	IE 6" SE 919.16 TO 209 IE 6" N 919.16 TO BLD F	EJIW 1080
215	CO	RIM : 927.56 DIA : 6"	7.29'	IE 6" S 920.27 TO 211 IE 6" NW 920.27 TO BLD E	EJIW 1080
217	CO	RIM : 924.78 DIA : 6"	5.38'	IE 6" NW 919.40 TO BLD C IE 6" E 919.40 TO 210	EJIW 1080

QUANTITIES (PHASE 2 ONLY)

SANITARY SEWER	
6" SANITARY SEWER, LEAD SDR 26	431 L.F.
MANHOLE, 4' DIA.	3 EA.
GREASE AND OIL SEPARATOR	3 EA.
CLEAN OUT	3 EA.
WATERMAIN	
2" DOMESTIC SERVICE, COPPER "K"	298 L.F.
6" D.I.P. CL54	185 L.F.
8" D.I.P. CL54	47 L.F.
STANDARD HYDRANT & VALVE ASSEMBLY	2 EA.
6" P.I.V.	2 EA.
2" GATE VALVE & BOX	3 EA.
STORM SEWER	
6" STORM SEWER, PVC	26 L.F.
8" STORM SEWER, PVC	30 L.F.
12" STORM SEWER, C-76 CLIV	836 L.F.
15" STORM SEWER, C-76 CLIV	90L.F.
18" STORM SEWER, C-76 CLIV	15 L.F.
18" STORM SEWER, HDPE	28 L.F.
18" STORM SEWER, MATERIAL TBD	30 L.F.
STORM INLET, 2' DIA.	7 EA.
CATCH BASIN, 4' DIA.	2 EA.
MANHOLE, 4' DIA.	5 EA.
RESTRICTED OUTLET MANHOLE	1 EA.
MANHOLE SIZE TBD	3 EA.
PRETREATMENT STRUCTURE SWT 3	1 EA.
60" UNDERGROUND DETENTION NE	1 EA.

Watermain Structure Table
Versa Pittsfield
18270.00

Prepared By NMT
Working Date September 5, 2014

Structure	Type	Rim	Casting
5	FH	925.49	EJIW 5BR-250
16	VB	926.55	
17	PIV	926.51	
18	VB	925.68	
20	VB	924.76	
21	PIV	924.77	

Storm Sewer Structure Table
Versa Pittsfield
18270.00

Prepared By NMT
Working Date September 5, 2014

Structure	Type	Details	Depth	Invert(s)	Casting	Sump
120	MH	RIM : 924.44 DIA : TBD	7.27'	IE 12" NE 917.17 TO PRETREATMENT IE 18" BYPASS SE 918.17 TO 120A IE 18" W 917.19 TO 121	Nyloplast Solid Cover	NO
120A	MH	RIM : 924.85 DIA : TBD	7.85'	IE 18" SE 917.00 TO DETENTION IE 18" BYPASS NW 917.00 TO 120 IE 12" N 917.00 TO PRETREATMENT	Nyloplast Solid Cover	NO
121	CB	RIM : 923.90 DIA : TBD	6.66'	IE 18" E 917.24 TO 120 IE 12" N 920.17 TO BLD F IE 15" SW 919.47 TO 122 IE 12" NE 918.00 TO 126	EJIW 1040Z Type M1	NO
122	MH	RIM : 924.77 DIA : 4'	5.11'	IE 15" NE 919.66 TO 121 IE 15" NW 919.66 TO 123 IE 12" SW 919.66 TO 125	EJIW 1040Z Type B	NO
123	MH	RIM : 924.55 DIA : 4'	4.72'	IE 15" SE 919.83 TO 122 IE 12" N 919.83 TO 124 IE 12" SW 919.83 TO 141	EJIW 1040Z Type B	NO
124	CB	RIM : 924.25 DIA : 4'	4.28'	IE 12" S 919.97 TO 123 IE 6" SE 920.17 TO BLD F. IE 12" W 919.97 TO 140	EJIW 5105 Type M1	NO
125	IN	RIM : 925.20 DIA : 2'	4.91'	IE 12" NE 920.30 TO 122	EJIW 1040Z Type M1	NO
126	IN	RIM : 923.40 DIA : 2'	5.00'	IE 12" SW 918.40 TO 121	EJIW 1040Z Type M1	NO
127	MH	RIM : 925.41 DIA : 4'	4.36'	IE 12" SW 921.15 TO 128 IE 12" NE 921.15 TO 129 EX. IE 12" SE 921.05	EJIW 1040Z Type B	NO
128	IN	RIM : 925.10 DIA : 2'	3.75'	IE 12" NE 921.35 TO 127	EJIW 1040Z Type M1	NO
129	IN	RIM : 924.80 DIA : 2'	3.40'	IE 12" SW 921.40 TO 127	EJIW 1040Z Type M1	NO
130	MH	RIM : 925.71 DIA : 4'	5.41'	IE 12" NE 920.40 TO 131 EX. IE 12" S 920.30	EJIW 1040Z Type B	NO
131	MH	RIM : 925.09 DIA : 4'	4.36'	IE 12" SW 920.75 TO 130 IE 12" NW 920.85 TO 132	EJIW 1040Z Type B	NO
132	IN	RIM : 924.00 DIA : 2'	2.79'	IE 12" SE 921.21 TO 131	EJIW 1040Z Type M1	NO
133	MH	RIM : 924.71 DIA : 6'	8.21'	IE 18" SW 916.61 TO DETENTION IE 12" NE 916.51 TO 303-6	EJIW 1040Z Type B	YES
140	IN	RIM : 924.10 DIA : 2'	3.81'	IE 12" E 920.29 TO 124	EJIW 7045 Type M1	NO
141	CB	RIM : 924.40 DIA : 4'	4.63'	IE 12" NW 920.37 TO 142 IE 8" SW 920.47 TO BLD E IE 12" NE 920.27 TO 123	EJIW 1040Z Type M1	NO
142	IN	RIM : 924.60 DIA : 2'	4.28'	IE 6" NE 920.85 TO BLD E IE 12" SE 920.65 TO 141	EJIW 7045 Type M1	NO

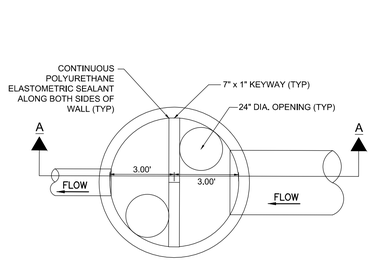

PLAN VIEW

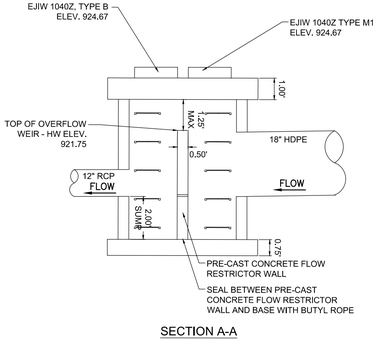

SECTION A-A

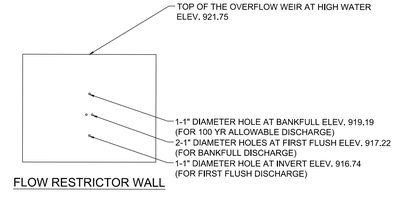

FLOW RESTRICTOR WALL

RESTRICTOR MANHOLE 133 DETAIL

UTILITY NOTES:

1. REFER TO ARCHITECTURAL PLANS TO COORDINATE ALL:
   A. WATER SUPPLY, METERING, SPRINKLER AND FDC PIPING, DESIGN AND COORDINATION
   B. BUILDING SEWER, BUILDING DRAIN DESIGN AND CONNECTIONS TO CLEAN OUTS AND ROOF CONNECTORS
   C. GAS, ELECTRIC AND COMMUNICATION SERVICES, AND LIGHTING DETAILS
   D. ALL BUILDING ACCESS WALKS AND ENTRY DETAILS, INCLUDING SUPPORTED SLABS
   E. ALL WORK TO CONSTRUCT THE BUILDING AND ALL ITEMS CONNECTED TO IT
2. ALL TRENCHES WITHIN A ONE ON ONE SLOPE OF PAVEMENT SHALL BE BACKFILLED WITH SAND (MDOT CLASS II MINIMUM) AND MECHANICALLY COMPACTED IN NOT MORE THAN 9" LAYER TO 95% MAXIMUM DRY DENSITY PER MODIFIED PROCTER COMPACTION TEST ASTM D-1557. COMPACTED SAND BACKFILL SHALL ALSO BE PROVIDED FOR ALL SEWER TRENCHES LOCATED UNDER, OR WITHIN, THREE FEET OF PAVEMENT.
3. A MINIMUM VERTICAL CLEARANCE OF 18 INCHES IS REQUIRED AT UTILITY CROSSINGS (MEASURED FROM THE OUTSIDE OF PIPE TO THE OUTSIDE OF PIPE). POSITIVE PROVISIONS SHALL BE MADE TO ENSURE THAT ALL UTILITY TRENCHES ARE FREE DRAINING DURING ALL PHASES OF CONSTRUCTION.
4. THE REQUIRED BEDDING FOR SEWER PIPE SHALL CONSIST OF 2NS SAND.
5. THE MINIMUM SLOPE FOR A BUILDING LEAD IS 1%. LEADS SHALL ONLY BE CONNECTED TO MANHOLES.
6. ALL STORM SEWER PIPE SHALL BE CONSTRUCTED WITH RUBBER GASKET (PREMIUM) JOINTS.
7. THE CONTRACTOR SHALL COORDINATE THE REMOVAL OF ALL UTILITY LINES AND STRUCTURES, AS OUTLINED ON THE DEMOLITION PLAN, WITH THE INSTALLATION OF UTILITY IMPROVEMENTS.
8. CONTRACTOR SHALL BE REQUIRED TO COORDINATE THE INSTALLATION OF GAS, ELECTRIC, PHONE, CABLE, SPRINKLERS ETC., IN SUCH A MANNER THAT WILL FACILITATE THEIR PROPER INSTALLATION PRIOR TO PLACING THE PAVEMENT MATERIALS. ENSURE THAT ALL REQUIRED PIPES, CONDUITS, CABLES AND SLEEVES ARE PROPERLY PLACED AND THAT THE TRENCHES ARE PROPERLY BACKFILLED AND COMPACTED.
9. THE CONTRACTOR SHALL REMOVE UTILITIES, WHICH HAVE BEEN ABANDONED IN PLACE, AS REQUIRED TO COMPLETE INSTALLATION OF NEW UTILITIES. WHENEVER ABANDONED UTILITIES ARE CUT, CONTRACTOR SHALL COMPLETELY CAP BOTH ENDS TO PREVENT THE INFILTRATION OF SOILS.
10. NO CONNECTION MAY BE MADE TO ANY EXISTING WATER MAIN UNTIL THE NEW MAIN HAS PASSED ALL PRESSURE AND BACTERIOLOGICAL TESTING.
11. ROADWAY, DRIVEWAY AND PARKING AREA CROSSINGS SHALL BE TEMPORARILY CONDITIONED IMMEDIATELY AFTER CROSSING BY PLACING 8" OF MDOT 22A GRAVEL OR SLAG AGGREGATE, AND SHALL BE MAINTAINED IN GOOD, DUST FREE CONDITION UNTIL PAVEMENT RESTORATION IS MADE.
12. WATER LEADS SHALL HAVE A MINIMUM OF 5.5 FEET OF COVER.
13. THIS PROJECT DOES NOT LIE WITHIN A 100 YEAR FLOODPLAIN AS INDICATED ON FIRM MAP #26161CO382E, DATED APRIL 3, 2012.
14. DELIVERY OF THE SWTC'S WILL BE BY KSI OR ONE OF OUR APPROVED CARRIERS. THE UNITS SHOULD BE STORED AWAY FROM CONSTRUCTION EQUIPMENT AND RELATED ACTIVITIES. AS AN EXTRA PRECAUTION THE UNITS CAN BE FENCED OFF WITH T POSTS AND SAFETY ORANGE PLASTIC FENCING. THE UNITS SHOULD BE STORED WITH THE RISERS VERTICAL. SHRINK WRAPPING THE RISER INLETS(TOPS) WILL KEEP WATER OUT BUT IS NOT NECESSARY. CHOCK UNITS WITH 4x4 PIECES OF WOOD ON BOTH SIDES OF UNITS TO KEEP FROM ROLLING OVER. THE UNITS SHOULD BE LIFTED WITH TWO NYLON/SYNTHETIC STRAPS (NO STEEL CHOKE CABLES) APPROX. 1/4 WAY IN FROM EACH END OF STRUCTURE. THE EXCAVATOR WILL ADJUST THE STRAPS A FEW CORRUGATION ONE WAY OR ANOTHER TO HORIZONTALLY BALANCE THE UNIT. THESE UNITS ARE LIGHT WEIGHT AND EASY TO MOVE.
15. ALL STORM FOOTING DRAINS ARE EXTERNAL.

giffels webster
Engineers
Surveyors
Planners
Landscape Architects
Environmental Specialists

1025 E. Maple Road
Suite 100
Birmingham, MI 48009
p (248) 852-3100
f (248) 852-6372
www.giffelswebster.com

Executive:	M.P.
Manager:	J.K.A.
Designer:	N.M.T.
Quality Control:	
Section:	7
	T-3-S R-6-E

Professional Seal:

Know what's below. Call before you dig. 811

DATE:	ISSUE:
06.26.2014	SUBMIT PRELIMINARY SITE PLAN
07.29.2014	RESUBMIT PRELIMINARY SITE PLAN WITH REVISED LAYOUT
09.03.2014	SUBMIT FINAL SITE PLAN

Developed For:

VERSA DEVELOPMENT

25900 W. 11 MILE ROAD
SUITE 250
SOUTHFIELD, MI 48034
(248) 416-1985

UTILITY CALCULATIONS, NOTES AND DETAILS

VERSA PITTSFIELD PHASE 2

PITTSFIELD TOWNSHIP
WASHTENAW COUNTY
MICHIGAN

Date:	12.14.2012
Scale:	NA
Sheet:	11
Project:	18270.00

Copyright © 2012 Giffels Webster.
No reproduction shall be made without the prior written consent of Giffels Webster.

H:\18\18200\18270 Versa Pittsfield\Drawing Files\Engineering\Phase 2\09 Storm Sewer Plan.dwg

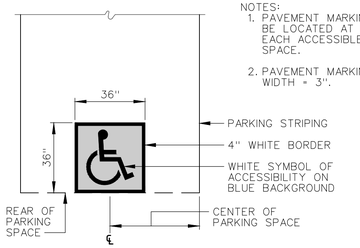

PERPENDICULAR PARKING

SYMBOL OF ACCESSIBILITY PAVEMENT MARKING DETAIL

NOT TO SCALE

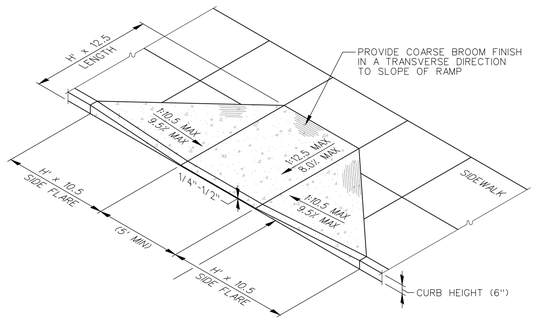

INSET CURB RAMP DETAIL

NOT TO SCALE

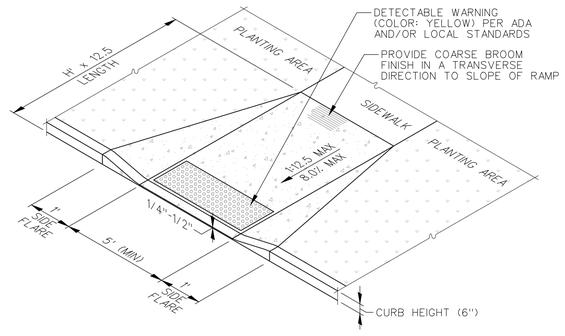

CURB RAMP WITH ROLLED SIDE FLARE DETAIL (WALKS IN ROW ONLY)

NOT TO SCALE

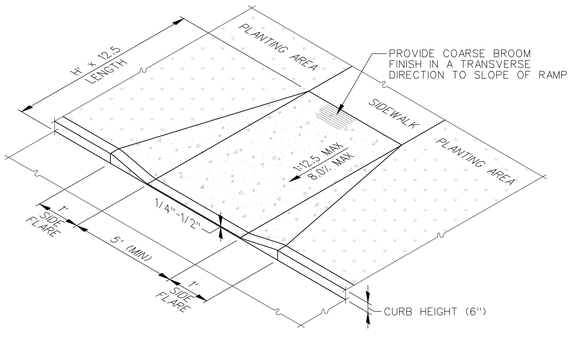

CURB RAMP WITH ROLLED SIDE FLARE DETAIL

NOT TO SCALE

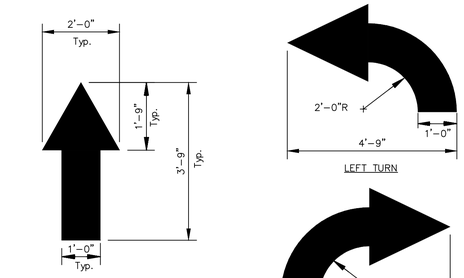

NOTE: ALL TRAFFIC FLOW ARROWS TO BE SOLID REFLECTIVE TRAFFIC PAINT PER DIMENSIONS ABOVE.
SURFACE TYPES: COLORS BASED ON WHITE FOR ASPHALT AND YELLOW FOR CONCRETE

TRAFFIC MARKINGS

NO SCALE

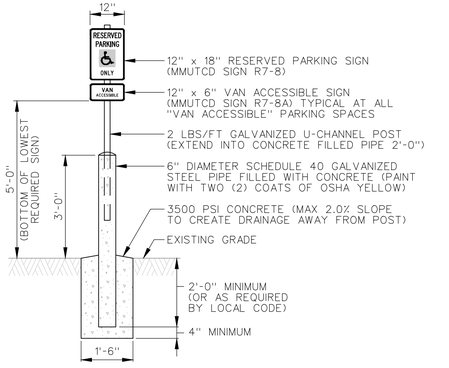

NOTES:
1. ONE REQUIRED AT EACH ACCESSIBLE PARKING SPACE.
2. WHERE ACCESSIBLE SPACES FACE EACH OTHER WITHOUT WALKWAY, THERE SHALL BE ONE POST WITH SIGNS MOUNTED ON BOTH SIDES.
3. SIGNS SHALL BE MOUNTED TO POST WITH GALVANIZED OR CADMIUM PLATED 5/16" DIAMETER STEEL BOLTS, NUTS AND WASHERS. THE CONTRACTOR SHALL SUPPLY AND INSTALL 5/16" NYLON WASHERS BETWEEN BOLT HEADS AND SIGN FACE TO PROTECT FINISH.
4. SIGNS SHALL CONFORM TO THE CURRENT "MICHIGAN MANUAL ON UNIFORM TRAFFIC CONTROL DEVICES (MMUTCD)" PUBLISHED BY THE MICHIGAN DEPARTMENT OF TRANSPORTATION (MDOT) AND MICHIGAN STATE POLICE (MSP) FOR SIZE, COLOR AND DIMENSIONS.

ACCESSIBLE PARKING SIGN DETAIL

NOT TO SCALE

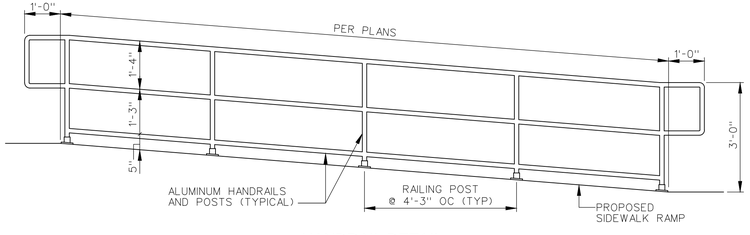

HANDRAIL DETAIL

SCALE: 1/2" = 1'-0"

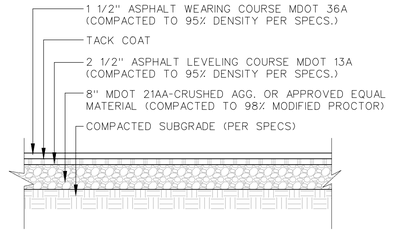

STANDARD DUTY ASPHALT PAVEMENT SECTION

NO SCALE

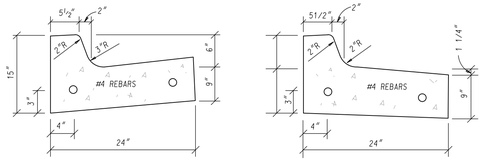

6" STANDARD CONCRETE CURB & GUTTER

NO SCALE

6" STRAIGHT REVERSE CURB & GUTTER

NO SCALE

NOTE: CONTRACTOR SHALL REVIEW PROPOSED AND EXISTING PAVEMENT SLOPE PRIOR TO INSTALLING APPROPRIATE CURB AND GUTTER SECTION.

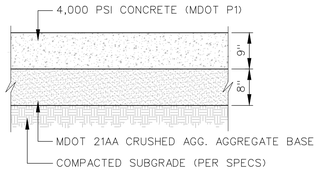

ANN ARBOR-SALINE ROAD PAVEMENT SECTION

NO SCALE

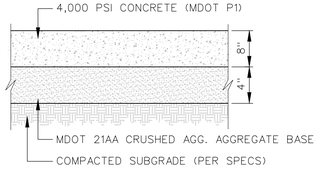

STANDARD CONCRETE PAVEMENT SECTION

NO SCALE

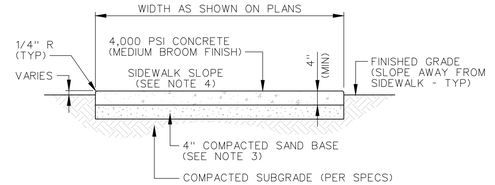

NOTES:
1. EXPANSION JOINTS: 1/2" WIDE x FULL DEPTH, AT 25' INTERVALS TRANSVERSELY, AROUND EMBEDDED ITEMS SUCH AS LIGHT BASES AND AT ABUTTING STRUCTURES SUCH AS BUILDINGS OR CURBS.
2. CONTRACTION JOINTS: 1/4" WIDE x 1" DEEP, ARRANGE TO FORM PANELS 6' MAXIMUM IN EITHER DIRECTION.
3. SAND BASE MATERIAL SHALL MEET THE MICHIGAN DEPARTMENT OF TRANSPORTATION (MDOT) SPECIFICATIONS FOR GRADATION AND OTHER SPECIFIED MATERIAL REQUIREMENTS.
4. SIDEWALK SLOPE SHALL NOT EXCEED A MAXIMUM CROSS SLOPE OF 2.0% AND A MAXIMUM LONGITUDINAL SLOPE OF 5.0%.

4" CONCRETE SIDEWALK DETAIL

NOT TO SCALE

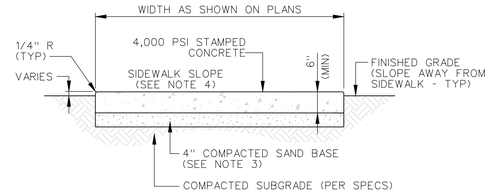

NOTES:
1. EXPANSION JOINTS: 1/2" WIDE x FULL DEPTH, AT 25' INTERVALS TRANSVERSELY, AROUND EMBEDDED ITEMS SUCH AS LIGHT BASES AND AT ABUTTING STRUCTURES SUCH AS BUILDINGS OR CURBS.
2. CONTRACTION JOINTS: 1/4" WIDE x 1" DEEP, ARRANGE TO FORM PANELS 6' MAXIMUM IN EITHER DIRECTION.
3. SAND BASE MATERIAL SHALL MEET THE MICHIGAN DEPARTMENT OF TRANSPORTATION (MDOT) SPECIFICATIONS FOR GRADATION AND OTHER SPECIFIED MATERIAL REQUIREMENTS.
4. SIDEWALK SLOPE SHALL NOT EXCEED A MAXIMUM CROSS SLOPE OF 2.0% AND A MAXIMUM LONGITUDINAL SLOPE OF 5.0%.

6" CONCRETE SIDEWALK DETAIL (FOR CROSSWALKS)

NOT TO SCALE

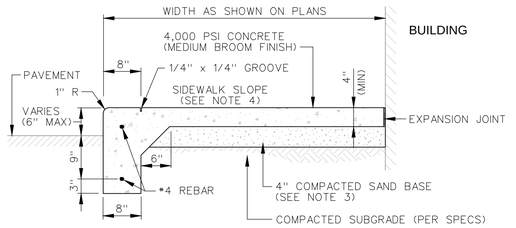

NOTES:
1. EXPANSION JOINTS: 1/2" WIDE x FULL DEPTH, AT 25' INTERVALS TRANSVERSELY, AROUND EMBEDDED ITEMS SUCH AS LIGHT BASES AND AT ABUTTING STRUCTURES SUCH AS BUILDINGS OR CURBS.
2. CONTRACTION JOINTS: 1/4" WIDE x 1" DEEP, ARRANGE TO FORM PANELS 6' MAXIMUM IN EITHER DIRECTION.
3. SAND BASE MATERIAL SHALL MEET THE MICHIGAN DEPARTMENT OF TRANSPORTATION (MDOT) SPECIFICATIONS FOR GRADATION AND OTHER SPECIFIED MATERIAL REQUIREMENTS.
4. SIDEWALK SLOPE SHALL NOT EXCEED A MAXIMUM CROSS SLOPE OF 2.0% AND A MAXIMUM LONGITUDINAL SLOPE OF 5.0%.

INTEGRAL CONCRETE CURB AND SIDEWALK DETAIL

NOT TO SCALE

giffels webster
Engineers
Surveyors
Planners
Landscape Architects
Environmental Specialists
1025 E. Maple Road
Suite 100
Birmingham, MI 48009
p (248) 852-3100
f (248) 852-6372
www.giffelswebster.com

Executive:	M.P.
Manager:	J.K.A.
Designer:	N.M.T.
Quality Control:	
Section:	7
	T-3-S R-6-E

Professional Seal:

811 Know what's below. Call before you dig.

DATE:	ISSUE:
06.26.2014	SUBMIT PRELIMINARY SITE PLAN
07.29.2014	RESUBMIT PRELIMINARY SITE PLAN WITH REVISED LAYOUT
09.03.2014	SUBMIT FINAL SITE PLAN

Developed For:
VERSA DEVELOPMENT
25900 W. 11 MILE ROAD
SUITE 250
SOUTHFIELD, MI 48034
(248) 416-1985

SITE DETAILS

VERSA PITTSFIELD PHASE 2
PITTSFIELD TOWNSHIP
WASHTENAW COUNTY
MICHIGAN

Date:	12.14.2012
Scale:	NA
Sheet:	12
Project:	18270.00

Copyright © 2012 Giffels Webster.
No reproduction shall be made without the prior written consent of Giffels Webster.

H:\18\18200\18270 Versa Pittsfield\Drawing Files\Engineering\Phase 2\12 Site Details.dwg

McDOWELL & ASSOCIATES
Geotechnical, Environmental, & Hydrogeologic Services
21355 Hatcher Avenue • Ferndale, MI 48220
Phone: (248) 399-2066 • Fax: (248) 399-2157

LOG OF SOIL BORING NO. 1
PROJECT Soil Boring Berm Areas
LOCATION Ann Arbor-Saline Road and Oak Valley Drive
JOB NO. 13-021
SURFACE ELEV. _____ **DATE** 1-31-13
Pittsfield Township, Michigan

Sample & Type	Depth	Legend	SOIL DESCRIPTION	Penetration Blows for 6"	Moisture %	Natural Wt. P.C.F.	Dry Den. Wt. P.C.F.	Unc. Comp. Strength PSF.	Str. %
	1		0'6" Moist dark brown silty clayey TOPSOIL with sand and pebbles and vegetation, fill						
	2								
	3		Moist brown silty CLAY with sand and pebbles and vegetation, fill						
	4								
	5								
	6								
	7		7'0" Moist brown silty CLAY with sand and pebbles, vegetation and brown and dark brown streaks, fill						
	8		8'0"						
	9		Moist brown and dark brown silty sandy CLAY with pebbles and vegetation, fill						
	10		10'2"						
	11		Moist brown, dark brown and blue silty sandy CLAY with pebbles and vegetation, fill						
	12								
	13		12'6"						
	14		Moist variegated silty CLAY with sand and pebbles						
	15		15'0"						
	16								
	17								
	18								
	19								
	20								
	21								
	22								
	23								
	24								
	25								

TYPE OF SAMPLE
D. - DISTURBED
U.L. - UNDIST. LINER
S.T. - SHELBY TUBE
S.S. - SPLIT SPOON
R.C. - ROCK CORE
( ) - PENETROMETER

REMARKS:
Standard Penetration Test - Driving 2" OD Sampler 1' With 140# Hammer Falling 30". Count Made at 6" Intervals

GROUND WATER OBSERVATIONS
G.W. ENCOUNTERED AT _____ FT. _____ INS.
G.W. ENCOUNTERED AT _____ FT. _____ INS.
G.W. AFTER COMPLETION none FT. _____ INS.
G.W. AFTER _____ HRS. FT. _____ INS.
G.W. VOLUMES

McDOWELL & ASSOCIATES
Geotechnical, Environmental, & Hydrogeologic Services
21355 Hatcher Avenue • Ferndale, MI 48220
Phone: (248) 399-2066 • Fax: (248) 399-2157

LOG OF SOIL BORING NO. 2
PROJECT Soil Boring Berm Areas
LOCATION Ann Arbor-Saline Road and Oak Valley Drive
JOB NO. 13-021
SURFACE ELEV. _____ **DATE** 1-31-13
Pittsfield Township, Michigan

Sample & Type	Depth	Legend	SOIL DESCRIPTION	Penetration Blows for 6"	Moisture %	Natural Wt. P.C.F.	Dry Den. Wt. P.C.F.	Unc. Comp. Strength PSF.	Str. %
	1		0'4" Moist dark brown silty clayey TOPSOIL with vegetation and pebbles, fill						
	2								
	3								
	4								
	5								
	6								
	7		6'2" Moist brown silty CLAY with sand and pebbles, vegetation and dark brown seams, fill						
	8		8'0"						
	9								
	10								
	11		Moist variegated silty CLAY with sand and pebbles						
	12								
	13								
	14								
	15		15'0"						
	16								
	17								
	18								
	19								
	20								
	21								
	22								
	23								
	24								
	25								

TYPE OF SAMPLE
D. - DISTURBED
U.L. - UNDIST. LINER
S.T. - SHELBY TUBE
S.S. - SPLIT SPOON
R.C. - ROCK CORE
( ) - PENETROMETER

REMARKS:
Standard Penetration Test - Driving 2" OD Sampler 1' With 140# Hammer Falling 30". Count Made at 6" Intervals

GROUND WATER OBSERVATIONS
G.W. ENCOUNTERED AT _____ FT. _____ INS.
G.W. ENCOUNTERED AT _____ FT. _____ INS.
G.W. AFTER COMPLETION none FT. _____ INS.
G.W. AFTER _____ HRS. FT. _____ INS.
G.W. VOLUMES

McDOWELL & ASSOCIATES
Geotechnical, Environmental, & Hydrogeologic Services
21355 Hatcher Avenue • Ferndale, MI 48220
Phone: (248) 399-2066 • Fax: (248) 399-2157

LOG OF SOIL BORING NO. 3
PROJECT Soil Boring Berm Areas
LOCATION Ann Arbor-Saline Road and Oak Valley Drive
JOB NO. 13-021
SURFACE ELEV. _____ **DATE** 1-31-13
Pittsfield Township, Michigan

Sample & Type	Depth	Legend	SOIL DESCRIPTION	Penetration Blows for 6"	Moisture %	Natural Wt. P.C.F.	Dry Den. Wt. P.C.F.	Unc. Comp. Strength PSF.	Str. %
	1		0'4" Moist dark brown silty clayey TOPSOIL with sand and pebbles and vegetation, fill						
	2								
	3		Moist brown silty CLAY with sand and pebbles, fill						
	4								
	5		5'0"						
	6		Moist brown and dark brown silty CLAY with sand and pebbles and vegetation, fill						
	7		7'3"						
	8								
	9		Moist brown, dark brown and blue silty CLAY with sand and pebbles and vegetation, fill						
	10								
	11		10'3"						
	12								
	13		Moist variegated silty CLAY with sand and pebbles and trace of vegetation						
	14								
	15		15'0"						
	16								
	17								
	18								
	19								
	20								
	21								
	22								
	23								
	24								
	25								

TYPE OF SAMPLE
D. - DISTURBED
U.L. - UNDIST. LINER
S.T. - SHELBY TUBE
S.S. - SPLIT SPOON
R.C. - ROCK CORE
( ) - PENETROMETER

REMARKS:
Standard Penetration Test - Driving 2" OD Sampler 1' With 140# Hammer Falling 30". Count Made at 6" Intervals

GROUND WATER OBSERVATIONS
G.W. ENCOUNTERED AT _____ FT. _____ INS.
G.W. ENCOUNTERED AT _____ FT. _____ INS.
G.W. AFTER COMPLETION none FT. _____ INS.
G.W. AFTER _____ HRS. FT. _____ INS.
G.W. VOLUMES

McDOWELL & ASSOCIATES
Geotechnical, Environmental, & Hydrogeologic Services
21355 Hatcher Avenue • Ferndale, MI 48220
Phone: (248) 399-2066 • Fax: (248) 399-2157

LOG OF SOIL BORING NO. 4
PROJECT Soil Boring Berm Areas
LOCATION Ann Arbor-Saline Road and Oak Valley Drive
JOB NO. 13-021
SURFACE ELEV. _____ **DATE** 1-31-13
Pittsfield Township, Michigan

Sample & Type	Depth	Legend	SOIL DESCRIPTION	Penetration Blows for 6"	Moisture %	Natural Wt. P.C.F.	Dry Den. Wt. P.C.F.	Unc. Comp. Strength PSF.	Str. %
	1		0'5" Moist dark brown silty sandy clayey TOPSOIL with vegetation and pebbles, fill						
	2								
	3		Moist brown silty CLAY with sand and pebble, fill						
	4								
	5		5'6"						
	6		Moist brown and dark brown silty sandy CLAY with pebbles and vegetation, fill						
	7		7'0"						
	8								
	9								
	10								
	11		Moist brown and dark brown silty sandy CLAY with pebbles, vegetation, roots and topsoil streaks, fill						
	12								
	13								
	14								
	15		15'0"						
	16								
	17								
	18								
	19								
	20								
	21								
	22								
	23								
	24								
	25								

TYPE OF SAMPLE
D. - DISTURBED
U.L. - UNDIST. LINER
S.T. - SHELBY TUBE
S.S. - SPLIT SPOON
R.C. - ROCK CORE
( ) - PENETROMETER

REMARKS:
Standard Penetration Test - Driving 2" OD Sampler 1' With 140# Hammer Falling 30". Count Made at 6" Intervals

GROUND WATER OBSERVATIONS
G.W. ENCOUNTERED AT _____ FT. _____ INS.
G.W. ENCOUNTERED AT _____ FT. _____ INS.
G.W. AFTER COMPLETION none FT. _____ INS.
G.W. AFTER _____ HRS. FT. _____ INS.
G.W. VOLUMES

McDOWELL & ASSOCIATES
Geotechnical, Environmental, & Hydrogeologic Services
21355 Hatcher Avenue • Ferndale, MI 48220
Phone: (248) 399-2066 • Fax: (248) 399-2157

LOG OF SOIL BORING NO. 13
PROJECT Soils Investigation - Proposed Restaurant Buildings – Meijer's Outlots
LOCATION Ann Arbor-Saline Road & Oak Valley Drive
JOB NO. 13-241
SURFACE ELEV. _____ **DATE** 8-20-13
Pittsfield Township, Michigan

Sample & Type	Depth	Legend	SOIL DESCRIPTION	Penetration Blows for 6"	Moisture %	Natural Wt. P.C.F.	Dry Den. Wt. P.C.F.	Unc. Comp. Strength PSF.	Str. %
	1		Moist brown silty sandy CLAY with pebbles, vegetation and dark color streaks, fill						
A SS	2		1'8"	6					
	3		Stiff to very stiff moist brown slightly organic silty sandy CLAY with vegetation, fill	8 10	15.5	120	*	(6000)	
	4								
B SS	5		4'6" Stiff moist brown silty CLAY with sand and pebbles	4 6					
	6		6'0"	7					
C SS	7		Firm moist variegated silty CLAY with sand and pebbles and wet sand seams	2 3	28.7	119			
	8			4			*	(2000)	
	9		8'6" Very stiff moist variegated silty CLAY with sand and pebbles						
D SS	10		9'8" Extremely stiff moist blue silty CLAY with sand and pebbles	7 12					
	11		10'6"	22					
	12								
	13								
	14								
	15								
	16								
	17								
	18								
	19								
	20								
	21								
	22								
	23								
	24								
	25								

TYPE OF SAMPLE
D. - DISTURBED
U.L. - UNDIST. LINER
S.T. - SHELBY TUBE
S.S. - SPLIT SPOON
R.C. - ROCK CORE
( ) - PENETROMETER

REMARKS:
* Calibrated Penetrometer
Standard Penetration Test - Driving 2" OD Sampler 1' With 140# Hammer Falling 30". Count Made at 6" Intervals

GROUND WATER OBSERVATIONS
G.W. ENCOUNTERED AT 6 FT. 2 INS.
G.W. ENCOUNTERED AT _____ FT. _____ INS.
G.W. AFTER COMPLETION 6 FT. 0 INS.
G.W. AFTER _____ HRS. FT. _____ INS.
G.W. VOLUMES heavy

McDOWELL & ASSOCIATES
Geotechnical, Environmental, & Hydrogeologic Services
21355 Hatcher Avenue • Ferndale, MI 48220
Phone: (248) 399-2066 • Fax: (248) 399-2157

LOG OF SOIL BORING NO. 14
PROJECT Soils Investigation - Proposed Restaurant Buildings – Meijer's Outlots
LOCATION Ann Arbor-Saline Road & Oak Valley Drive
JOB NO. 13-241
SURFACE ELEV. _____ **DATE** 8-20-13
Pittsfield Township, Michigan

Sample & Type	Depth	Legend	SOIL DESCRIPTION	Penetration Blows for 6"	Moisture %	Natural Wt. P.C.F.	Dry Den. Wt. P.C.F.	Unc. Comp. Strength PSF.	Str. %
	1		0'7" ASPHALT						
A SS	2		0'11" Moist brown SAND & GRAVEL, aggregate fill 1'4" Moist brown fine SAND, fill	5 8	13.4	137			
	3		Very stiff moist brown silty CLAY with sand and pebbles	13			*	(6000)	
	4			7					
B SS	5		4'6" Extremely stiff moist blue silty CLAY with sand and pebbles and brown silt seams	12 16	13.6	135	*	(8000)	
	6		6'3"						
C SS	7		Very stiff moist blue silty CLAY with sand and pebbles	9 10					
	8			11					
	9								
D SS	10			6 7					
	11		10'6"	10					
	12								
	13								
	14								
	15								
	16								
	17								
	18								
	19								
	20								
	21								
	22								
	23								
	24								
	25								

TYPE OF SAMPLE
D. - DISTURBED
U.L. - UNDIST. LINER
S.T. - SHELBY TUBE
S.S. - SPLIT SPOON
R.C. - ROCK CORE
( ) - PENETROMETER

REMARKS:
* Calibrated Penetrometer
Standard Penetration Test - Driving 2" OD Sampler 1' With 140# Hammer Falling 30". Count Made at 6" Intervals

GROUND WATER OBSERVATIONS
G.W. ENCOUNTERED AT _____ FT. _____ INS.
G.W. ENCOUNTERED AT _____ FT. _____ INS.
G.W. AFTER COMPLETION none FT. _____ INS.
G.W. AFTER _____ HRS. FT. _____ INS.
G.W. VOLUMES

McDOWELL & ASSOCIATES
Geotechnical, Environmental, & Hydrogeologic Services
21355 Hatcher Avenue • Ferndale, MI 48220
Phone: (248) 399-2066 • Fax: (248) 399-2157

LOG OF SOIL BORING NO. 15
PROJECT Soils Investigation - Proposed Restaurant Buildings – Meijer's Outlots
LOCATION Ann Arbor-Saline Road & Oak Valley Drive
JOB NO. 13-241
SURFACE ELEV. _____ **DATE** 8-20-13
Pittsfield Township, Michigan

Sample & Type	Depth	Legend	SOIL DESCRIPTION	Penetration Blows for 6"	Moisture %	Natural Wt. P.C.F.	Dry Den. Wt. P.C.F.	Unc. Comp. Strength PSF.	Str. %
	1		0'5" ASPHALT 1'0" Moist brown SAND & GRAVEL, aggregate fill						
A SS	2		2'5" Compact moist brown fine SAND, fill	4					
	3			4 10	12.6	135	*	(5000)	
	4								
B SS	5		Very stiff moist variegated silty CLAY with sand and pebbles and wet sand seams	7 10	11.9	137			
	6			11			*	(8000)	
C SS	7			9 9					
	8			14					
	9								
D SS	10		9'6" Extremely stiff moist blue silty CLAY with sand and pebbles	11 16					
	11		10'6"	27					
	12								
	13								
	14								
	15								
	16								
	17								
	18								
	19								
	20								
	21								
	22								
	23								
	24								
	25								

TYPE OF SAMPLE
D. - DISTURBED
U.L. - UNDIST. LINER
S.T. - SHELBY TUBE
S.S. - SPLIT SPOON
R.C. - ROCK CORE
( ) - PENETROMETER

REMARKS:
* Calibrated Penetrometer
Standard Penetration Test - Driving 2" OD Sampler 1' With 140# Hammer Falling 30". Count Made at 6" Intervals

GROUND WATER OBSERVATIONS
G.W. ENCOUNTERED AT 7 FT. 0 INS.
G.W. ENCOUNTERED AT _____ FT. _____ INS.
G.W. AFTER COMPLETION 6 FT. 9 INS.
G.W. AFTER _____ HRS. FT. _____ INS.
G.W. VOLUMES heavy

giffels webster
Engineers
Surveyors
Planners
Landscape Architects
Environmental Specialists

1025 E. Maple Road
Suite 100
Birmingham, MI 48009
p (248) 852-3100
f (248) 852-6372
www.giffelswebster.com

Executive:	M.P.
Manager:	J.K.A.
Designer:	N.M.T.
Quality Control:	
Section:	7
	T-3-S R-6-E

Professional Seal:

811 Know what's below. Call before you dig.

DATE:	ISSUE:
06.26.2014	SUBMIT PRELIMINARY SITE PLAN
07.29.2014	RESUBMIT PRELIMINARY SITE PLAN WITH REVISED LAYOUT
09.03.2014	SUBMIT FINAL SITE PLAN

Developed For:

VERSA DEVELOPMENT

25900 W. 11 MILE ROAD
SUITE 250
SOUTHFIELD, MI 48034
(248) 416-1985

SOIL BORING LOGS

VERSA PITTSFIELD PHASE 2

PITTSFIELD TOWNSHIP
WASHTENAW COUNTY
MICHIGAN

Date:	12.14.2012
Scale:	NA
Sheet:	13
Project:	18270.00

Copyright © 2012 Giffels Webster.
No reproduction shall be made without the prior written consent of Giffels Webster.

H:\18\18200\18270 Versa Pittsfield\Drawing Files\Engineering\Phase 2\13 Soil Boring Logs.dwg

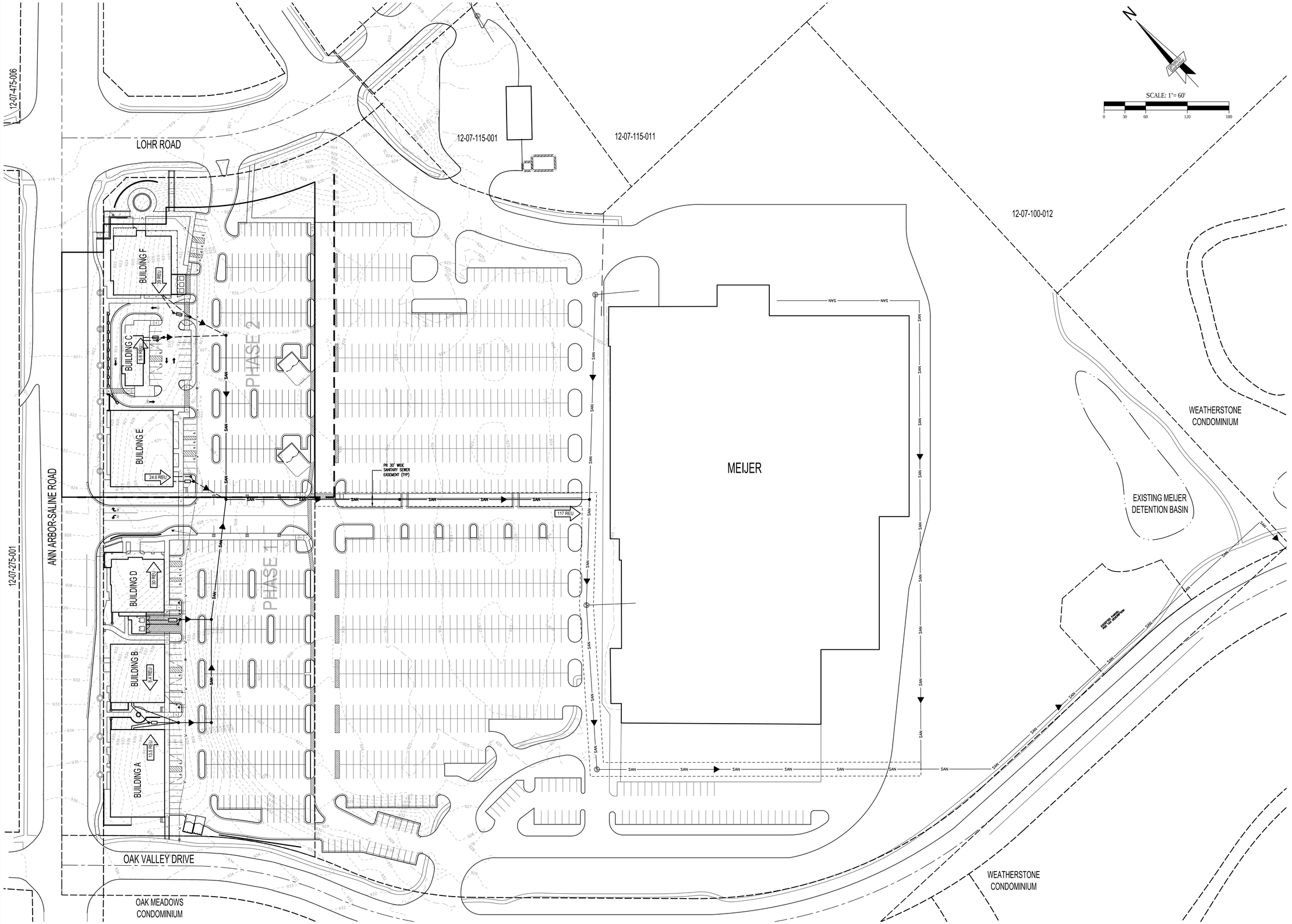

giffels webster
Engineers
Surveyors
Planners
Landscape Architects
Environmental Specialists

1025 E. Maple Road
Suite 100
Birmingham, MI 48009
p (248) 852-3100
f (248) 852-6372
www.giffelswebster.com

Executive:	M.P.
Manager:	J.K.A.
Designer:	N.M.T.
Quality Control:	
Section:	7
	T-3-S R-6-E

Professional Seal:

811 Know what's below. Call before you dig.

DATE:	ISSUE:
06.26.2014	SUBMIT PRELIMINARY SITE PLAN
07.29.2014	RESUBMIT PRELIMINARY SITE PLAN WITH REVISED LAYOUT
09.03.2014	SUBMIT FINAL SITE PLAN

Developed For:

VERSA DEVELOPMENT

25900 W. 11 MILE ROAD
SUITE 250
SOUTHFIELD, MI 48034
(248) 416-1985

SANITARY SEWER SERVICE DISTRICT MAP

VERSA PITTSFIELD PHASE 2

PITTSFIELD TOWNSHIP
WASHTENAW COUNTY
MICHIGAN

Date:	12.14.2012
Scale:	1" = 60'
Sheet:	14
Project:	18270.00

Copyright © 2012 Giffels Webster.
No reproduction shall be made without the prior written consent of Giffels Webster.

H:\18\18200\18270 Versa Pittsfield\Drawing Files\Engineering\Phase 2\14 Sanitary Sewer Service Map.dwg

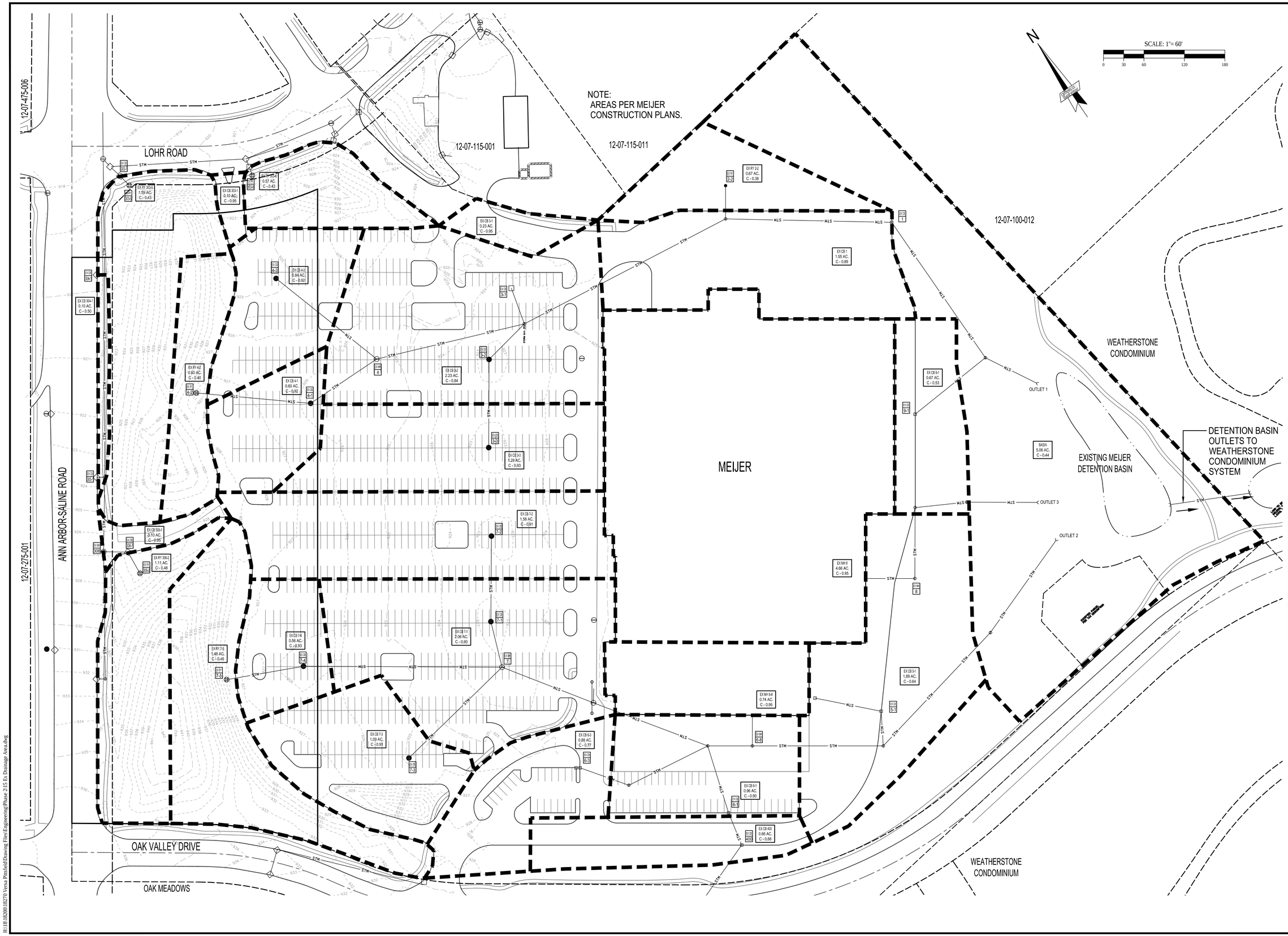

giffels webster

Engineers
Surveyors
Planners
Landscape Architects
Environmental Specialists

1025 E. Maple Road
Suite 100
Birmingham, MI 48009
p (248) 852-3100
f (248) 852-6372
www.giffelswebster.com

Executive:	M.P.
Manager:	J.K.A.
Designer:	N.M.T.
Quality Control:	
Section:	7
	T-3-S R-6-E

Professional Seal:

811 Know what's below. Call before you dig.

DATE:	ISSUE:
06.26.2014	SUBMIT PRELIMINARY SITE PLAN
07.29.2014	RESUBMIT PRELIMINARY SITE PLAN WITH REVISED LAYOUT

Developed For:

VERSA DEVELOPMENT

25900 W. 11 MILE ROAD
SUITE 250
SOUTHFIELD, MI 48034
(248) 416-1985

EXISTING DRAINAGE AREA PLAN

VERSA PITTSFIELD PHASE 2

PITTSFIELD TOWNSHIP
WASHTENAW COUNTY
MICHIGAN

Date:	12.14.2012
Scale:	1" = 60'
Sheet:	15
Project:	18270.00

Copyright © 2012 Giffels Webster.
No reproduction shall be made without the prior written consent of Giffels Webster.

H:\18\18200\18270 Versa Pittsfield\Drawing Files\Engineering\Phase 2\15 Ex Drainage Area.dwg

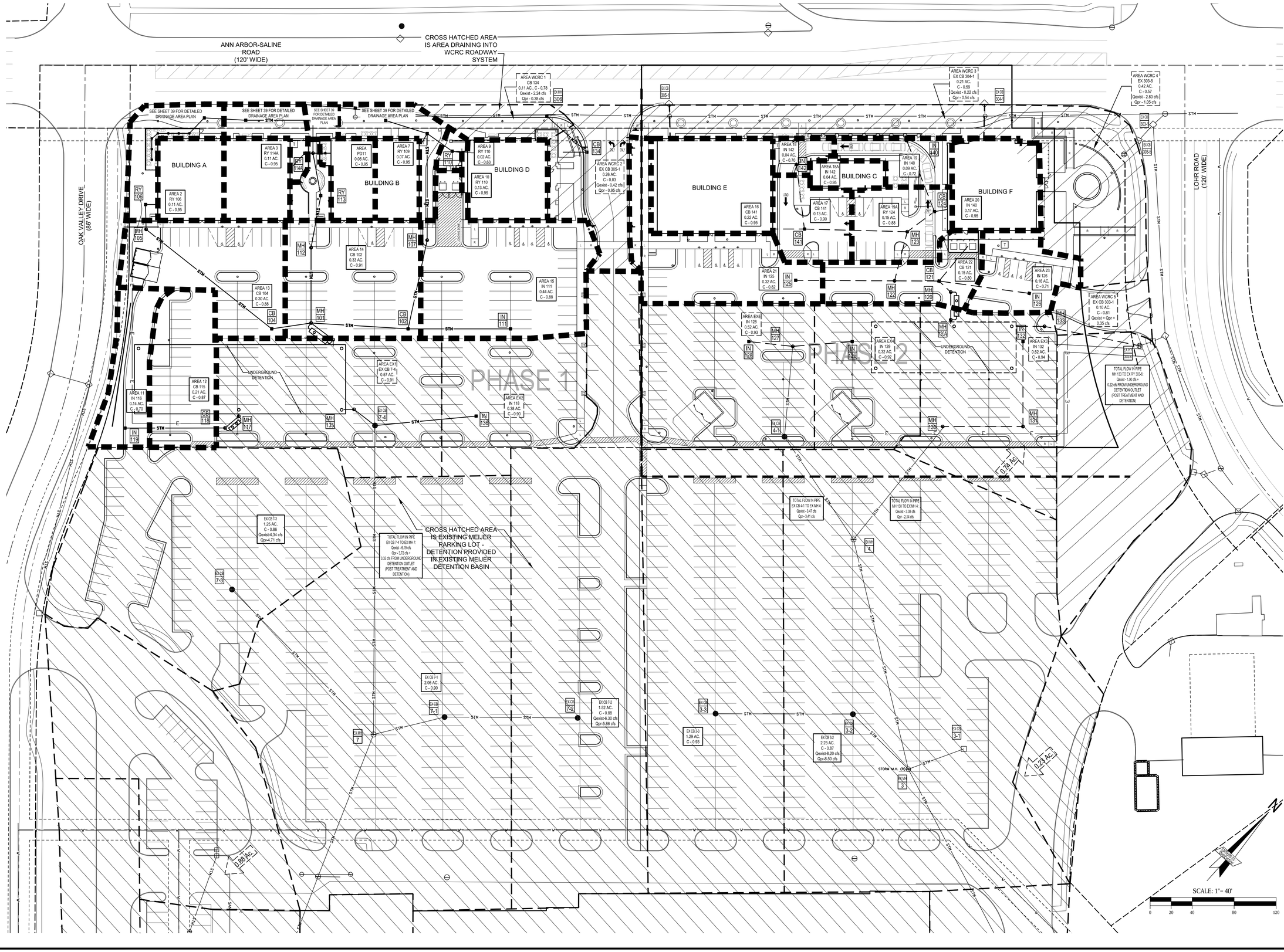

giffels webster
Engineers
Surveyors
Planners
Landscape Architects
Environmental Specialists

1025 E. Maple Road
Suite 100
Birmingham, MI 48009
p (248) 852-3100
f (248) 852-6372
www.giffelswebster.com

Executive:	M.P.
Manager:	J.K.A.
Designer:	N.M.T.
Quality Control:	
Section:	7
	T-3-S R-6-E

Professional Seal:

811 Know what's below. Call before you dig.

DATE:	ISSUE:
06.26.2014	SUBMIT PRELIMINARY SITE PLAN
07.29.2014	RESUBMIT PRELIMINARY SITE PLAN WITH REVISED LAYOUT
09.03.2014	SUBMIT FINAL SITE PLAN

Developed For:

VERSA DEVELOPMENT

25900 W. 11 MILE ROAD
SUITE 250
SOUTHFIELD, MI 48034
(248) 416-1985

PROPOSED DRAINAGE AREA PLAN

VERSA PITTSFIELD PHASE 2

PITTSFIELD TOWNSHIP
WASHTENAW COUNTY
MICHIGAN

Date:	12.14.2012
Scale:	1" = 50'
Sheet:	16
Project:	18270.00

Copyright © 2012 Giffels Webster.
No reproduction shall be made without the prior written consent of Giffels Webster.

H:\18\18200\18270 Versa Pittsfield\Drawing Files\Engineering\Phase 2\16 Drainage Area Plan.dwg

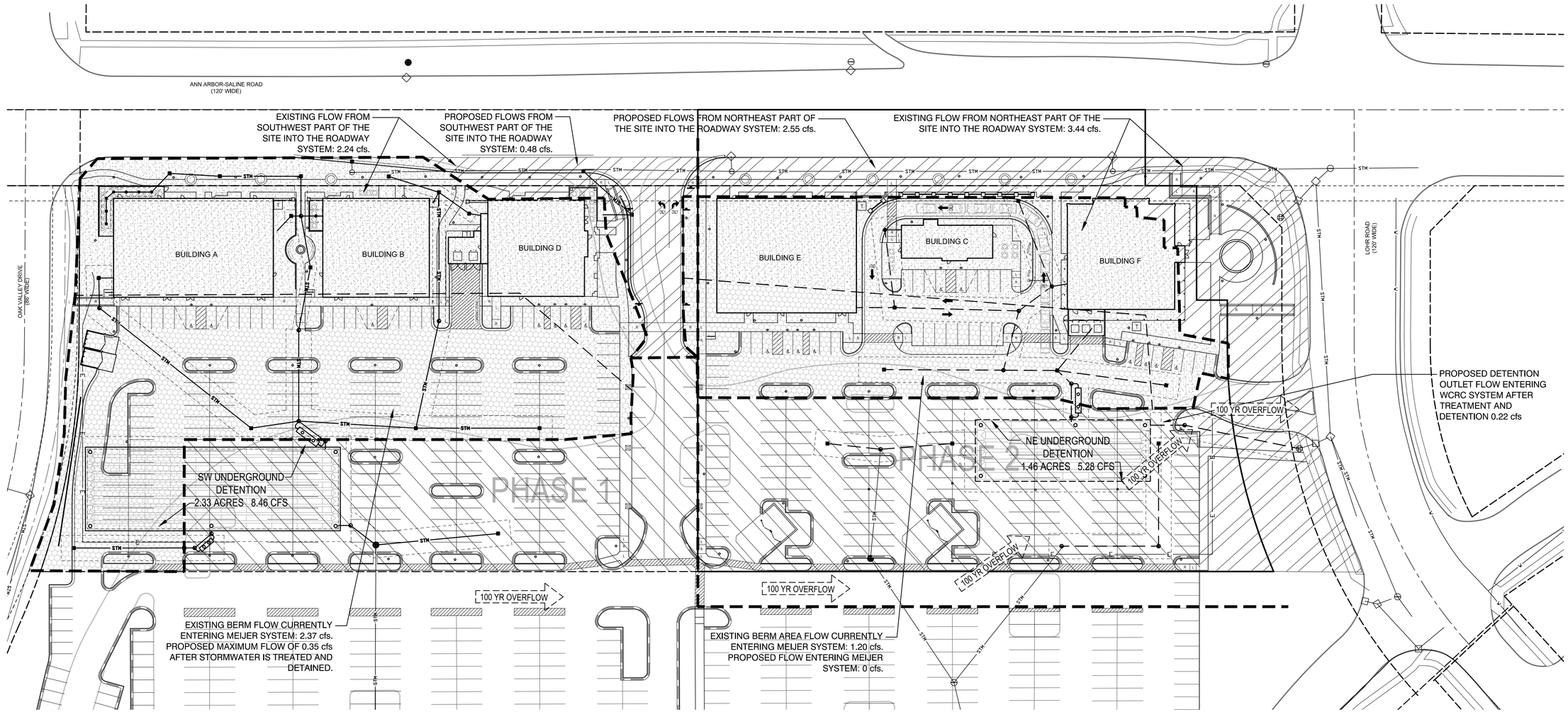

giffels webster
Engineers
Surveyors
Planners
Landscape Architects
Environmental Specialists

1025 E. Maple Road
Suite 100
Birmingham, MI 48009
p (248) 852-3100
f (248) 852-6372
www.giffelswebster.com

Executive:	M.P.
Manager:	J.K.A.
Designer:	N.M.T.
Quality Control:	
Section:	7
	T-3-S R-6-E

Professional Seal:

811 Know what's below. Call before you dig.

DATE:	ISSUE:
06.26.2014	SUBMIT PRELIMINARY SITE PLAN
07.29.2014	RESUBMIT PRELIMINARY SITE PLAN WITH REVISED LAYOUT
09.03.2014	SUBMIT FINAL SITE PLAN

Developed For:

VERSA DEVELOPMENT

25900 W. 11 MILE ROAD
SUITE 250
SOUTHFIELD, MI 48034
(248) 416-1985

SITE STORMWATER MANAGEMENT PLAN

VERSA PITTSFIELD PHASE 2

PITTSFIELD TOWNSHIP
WASHTENAW COUNTY
MICHIGAN

Date:	12.14.2012
Scale:	1" = 50'
Sheet:	17
Project:	18270.00

Copyright © 2013 Giffels Webster.
No reproduction shall be made without the prior written consent of Giffels Webster.

LEGEND

- EXISTING DRAINAGE AREA INTO WCRC SYSTEM AND WILL CONTINUE INTO WCRC SYSTEM
- EXISTING PARKING LOT INTO MEIJER SYSTEM AND WILL CONTINUE INTO MEIJER SYSTEM
- EXISTING BERM AREA INTO WCRC SYSTEM WILL NOW BE TREATED AND DETAINED ONSITE
- EXISTING BERM AREA INTO MEIJER SYSTEM WILL NOW BE TREATED AND DETAINED ONSITE

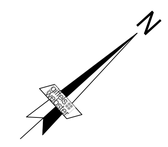

H:\18\18200\18270 Versa Pittsfield\Drawing Files\Engineering\Phase 2\17 SWM Plan.dwg

giffels webster **Detention Design**
Versa Pittsfield - East
18270.00

Completed By NMT
Working Date November 15, 2013
Jurisdiction Washtenaw County

Weighted "C" Calculation

	Area (acres)	C	Area x C						
Building Roofs and Pavement	1.21	0.95	1.15						
Lawn/Open Areas <4%	0.25	0.30	0.08						
Total	1.46		1.22						
C_W = Area x C / Area	1.22	=	1.46	=	0.84				

Allowable Outflow Calculation

Based on Acreage:					Property Area=	1.46	acres	
Q_a=	0.15	cfs/acre						
=	0.15	cfs/acre	x	1.46	acres			
=	0.22	cfs						

10YEAR STORM EVENT
Required Storage Volume

Q_D=	Q_a / A x C	=	0.22							
=	0.18	cfs per acres impervious	1.46	acres	x	0.84				
T_{100}=	-25	+	$\sqrt{10{,}313 \, Q_D}$							
=	-25	+	$\sqrt{10{,}313 \times 0.18}$							
=	215.13	minutes								
V_{R100}=	16,500 / T_{100}	x	T_{100} + 25	-	40	x	Q_D=	x	T_{100}	
=	16,500 / 215.13	x	215.13 + 25	-	40	x	0.18	x	215.13	
=	13243	cubic feet per acre imprevious								
V_{R100}=	V_{R100}	x	A	x	C					
=	13243	x	1.46	x	0.84					
=	16216	cubic feet								

giffels webster **Detention Design**
Versa Pittsfield - East
18270.00

Completed By NMT
Working Date November 15, 2013
Jurisdiction Washtenaw County

Required First Flush Storage Volume

First flush volume, or first half inch of rain in a 24-hour storm

V_{ff}=	1,815	x	A	x	C					
=	1,815	x	1.46	x	0.84					
=	2222	cubic feet								

Bankfull Storage Volume

V_{bf}=	8,170	x	A	x	C					
=	8,170	x	1.46	x	0.84					
=	10004	cubic feet								

First Flush Elevation Calculation

Elevation of Outlet E_O=	E_O=	916.25								
Elevation at First Flush E_{ff}=	E_{ff}=	917.22			h_{ff}=	0.97	ft			

Bankfull Storage Elevation Calculation

Elevation at bankfull storage volume V_{BF}=	E_O=	916.25								
Elevation at bankfull storage volume V_{BF}=	E_{BF}=	919.19			h_{bf}=	2.94	ft			

Total Storage Elevation Calculation

Elevation at total storage volume V_{tf}=	E_O=	916.25								
Elevation at total storage volume V_{tf}=	E_{100}=	921.25			$h_{t-100yr}$=	5.00	ft			

Outlet Structure Calculations

First Flush Volume:
Must be detained for a minimum of 24 hours.

V_R Release time = 24.00 hours

$Q_{ff} = \frac{V_{ff}}{\text{Release Time}} = \frac{2222}{86400} = 0.0257$ cfs

$Q_{ff} = c \times A_{ff} \times (2 \times 32.2 \times h_{ff})^{0.5}$ c = 0.62

h_{ff} = 0.97 ft Use 2/3h = 0.65 ft

$A_{ff} = \frac{Q_{ff}}{0.62(64.4 \times h_{ff})^{0.5}} = \frac{0.0257}{0.62(64.4 \times h_{ff})^{0.5}} = 0.0064$ ft²

Use 1 - 1" hole at outlet elevation A_{ff} = 0.0054 ft²

$Q_{ff} = c \times A_{ff} \times (64.4 \times h_{ff})^{0.5} = 0.022$ cfs

giffels webster **Detention Design**
Versa Pittsfield - East
18270.00

Completed By NMT
Working Date November 15, 2013
Jurisdiction Washtenaw County

Dewatering Time = $\frac{V_R}{Q_R} = \frac{2222}{0.022} = 28.57$ hr

Bankfull Volume:
Must be detained for a minimum of 24 hours and no longer than 40 hours.

V_R Release time = 24.00 hours

$Q_{bf\,max} = \frac{V_{bf}}{\text{Release Time}} = \frac{10004}{86400} = 0.116$ cfs

$Q_R = c \times A_{ff} \times (2 \times 32.2 \times h_{ff})^{0.5}$ c = 0.62

h_{ff} = 2.94 ft Use 2/3h = 1.96 ft

Q_R = 0.038 cfs

$Q_{bf} = Q_{bf\,max} - Q_R$ = 0.078 cfs

$h_{bf} = h_{bf} - h_{ff}$ = 1.97 ft Use 2/3h = 1.31 ft

$A_{bf} = \frac{Q_{bf}}{0.62(64.4 \times h_{bf})^{0.5}} = \frac{0.078}{0.62(64.4 \times h_{bf})^{0.5}} = 0.014$ ft²

Use 2 - 1" holes at first flush elevation $A_{bf\,tot}$ = 0.0108 ft²

$Q_{bf} = c \times A_{bf\,tot} \times (64.4 \times h_{bf})^{0.5} = 0.062$ cfs

Dewatering Time = $\frac{V_{bf}}{Q_{bf}} = \frac{10004}{0.099} = 28.01$ hr

100 Year Outflow:

$Q_{allowable}$ = 0.22 cfs

$h_{t-100yr}$ = 5.00 ft

$Q_R = c \times A_{ff} \times (2 \times 32.2 \times h_{t-100yr})^{0.5}$ c = 0.62

Q_R = 0.060 cfs

$h_{t-100yr}$ = 4.03 ft

$Q_R = c \times A_{ff} \times (2 \times 32.2 \times h_{t-100yr})^{0.5}$ c = 0.62

Q_R = 0.108 cfs

$Q_{100} = Q_{allowable} - Q_R - Q_{ff}$ = 0.051 cfs

$h_{bf-100yr}$ = 2.06 ft Use 2/3h = 1.37 ft

$A_{bf-100} = \frac{Q_{100}}{0.62(64.4 \times h_{bf-100yr})^{0.5}} = \frac{0.051}{0.62(64.4 \times h_{bf-100yr})^{0.5}} = 0.009$ ft²

Use 1 - 1" hole at bankfull flush elevation A_{bf-100} = 0.0054 ft²

$Q_{100} = c \times A_{bf-100} \times (64.4 \times h_{bf-100yr})^{0.5} = 0.031$ cfs

$Q_{total} = Q_{100} + Q_R + Q_{ff}$ = 0.20 cfs < 0.22 cfs

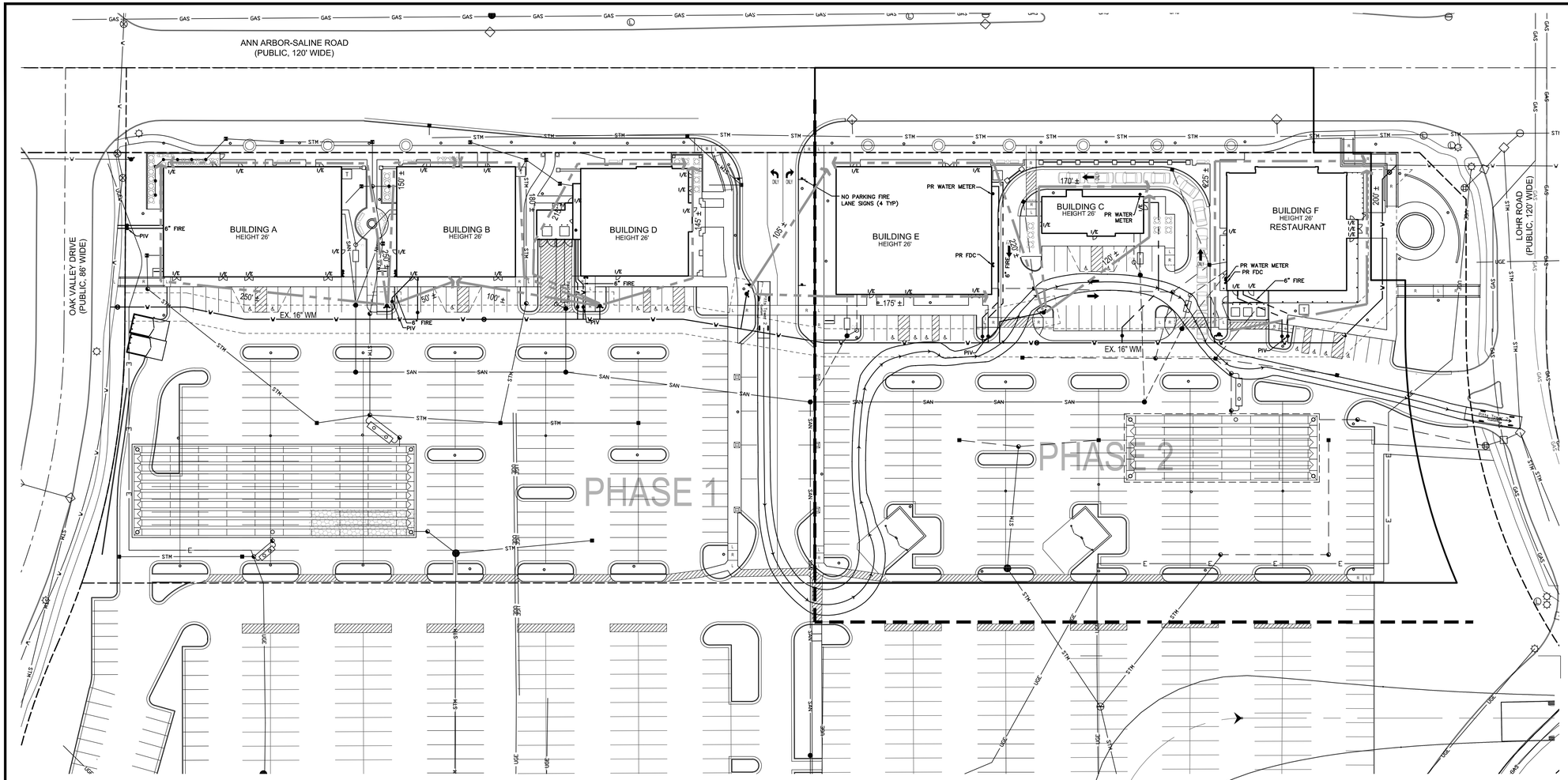

LEGEND

I/E	POINTS OF INGRESS/EGRESS
	FIRE LANE – NO STANDING SIGN

NOTES:

1. BOTH SIDES OF BUILDING MUST BE ADDRESSED (PARKING LOT & ANN ARBOR-SALINE ROAD SIDES)
2. FINAL BUILDING USES WILL BE DETERMINED ONCE TENANT LINEUPS ARE FINALIZED
3. GAS & ELECTRIC FRANCHISED UTILITIES WILL BE ADDED TO THE PLANS ONCE RECEIVED FROM UTILITY COMPANIES AND WILL BE SHOWN ON THE ASBUILTS
4. EACH TENANT WILL HAVE KNOX BOX AND THE LOCATION WILL BE SHOWN ON THE BUILDING PLANS.

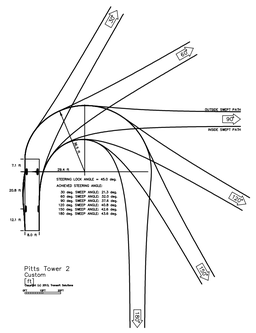

PITTS TOWER 2 TURNING TEMPLATE
(AUTOTURN DATA)

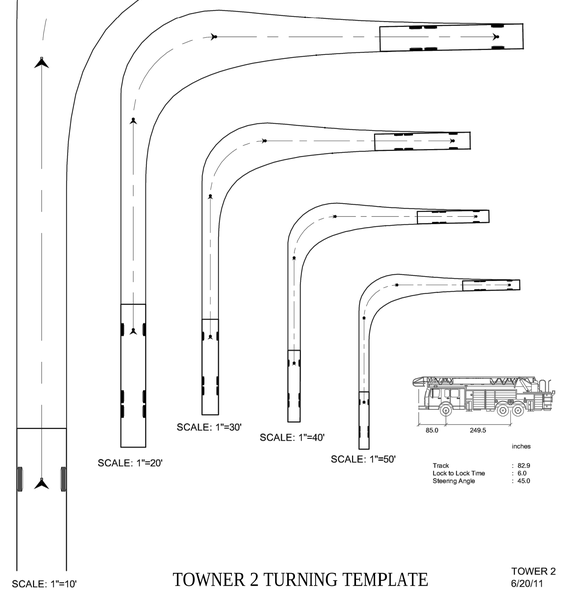

TOWNER 2 TURNING TEMPLATE

TOWER 2
6/20/11

NO PARKING
FIRE
LANE

NO PARKING SIGN 'B'
WHITE REFLECTIVE SIGN WITH
RED LETTERING/LINES - SIZE
12"x18"
NO SCALE

giffels webster
Engineers
Surveyors
Planners
Landscape Architects
Environmental Specialists

1025 E. Maple Road
Suite 100
Birmingham, MI 48009
p (248) 852-3100
f (248) 852-6372
www.giffelswebster.com

Executive:	M.P.
Manager:	J.K.A.
Designer:	N.M.T.
Quality Control:	
Section:	7
	T-3-S R-6-E

Professional Seal:

811 Know what's below. Call before you dig.

DATE:	ISSUE:
06.26.2014	SUBMIT PRELIMINARY SITE PLAN
07.29.2014	RESUBMIT PRELIMINARY SITE PLAN WITH REVISED LAYOUT
09.03.2014	SUBMIT FINAL SITE PLAN

Developed For:

VERSA DEVELOPMENT

25900 W. 11 MILE ROAD
SUITE 250
SOUTHFIELD, MI 48034
(248) 416-1985

FIRE PROTECTION PLAN

VERSA PITTSFIELD PHASE 2

PITTSFIELD TOWNSHIP
WASHTENAW COUNTY
MICHIGAN

Date:	12.14.2012
Scale:	1" = 40'
Sheet:	18
Project:	18270.00

Copyright © 2012 Giffels Webster.
No reproduction shall be made without the prior written consent of Giffels Webster.

H:\18\18200\18270 Versa Pittsfield\Drawing Files\Engineering\Phase 2\18 Fire Protection.dwg

PROJECT INFORMATION	
ENGINEERED PRODUCT MANAGER:	CHRIS OWEN 248-431-1361 CHRIS.OWEN@ADS-PIPE.COM
ADS SALES REP:	ANDY KELLER 248-417-4693 ANDY.KELLER@ADS-PIPE.COM
PROJECT NO:	31533

ADVANCED DRAINAGE SYSTEMS, INC.

VERSA DEVELOPMENT

PITTSFIELD, MICHIGAN

ADS STORM WATER QUALITY UNIT SPECIFICATION

SCOPE
THIS SPECIFICATION DESCRIBES 36-60 INCH (900-1500 mm) STORM WATER QUALITY UNITS FOR USE IN ONSITE POINT SOURCE STORM WATER TREATMENT APPLICATIONS.

REQUIREMENTS
STORM WATER QUALITY UNITS SHALL HAVE A SMOOTH INTERIOR AND ANNULAR EXTERIOR CORRUGATIONS MEETING THE REQUIREMENTS OF ASTM F2737. THE UNIT SHALL HAVE AT LEAST THREE CONTAINMENT ZONES, EACH ZONE SEPARATED FROM THE NEXT BY USE OF A WEIR OR BAFFLE PLATE WEIR AND BAFFLE PLATES SHALL BE WELDED AT ALL INTERFACES BETWEEN THE PLATE AND WATER QUALITY UNIT. FIRST WEIR PLATE SHALL INCORPORATE A SAW TOOTH DESIGN AND SHALL BE REINFORCED WITH STIFFENERS POSITIONED HORIZONTALLY ON THE DOWNSTREAM SIDE OF THE PLATE TO BE RETAINED. STORM WATER QUALITY UNITS SHALL PROVIDE ADEQUATE CLEAN-OUT AND INSPECTION ACCESS.

JOINT PERFORMANCE
CONNECTIONS FOR THE BYPASS LINE AND THE UNIT SHALL UTILIZE THE SAME JOINT QUALITY AS SPECIFIED FOR THE MAIN STORM SEWER PIPE. COUPLERS FOR THE BYPASS LINE MAY BE EITHER SPLIT COUPLERS, IN-LINE BELL COUPLERS, SNAP COUPLERS, BELL-BELL COUPLERS, OR WELDED BELL COUPLERS.

MATERIAL PROPERTIES
VIRGIN MATERIAL FOR PIPE & FITTINGS USED TO PRODUCE STORM WATER QUALITY UNITS SHALL BE HIGH DENSITY POLYETHYLENE CONFORMING WITH THE MINIMUM REQUIREMENTS OF CELL CLASSIFICATION 424420C FOR 4-10 INCH (100-250 mm) DIAMETERS, AND 435400C FOR 12-60 INCH (300-1500 mm) DIAMETERS AS DEFINED AND DESCRIBED IN THE LATEST VERSION OF ASTM D3350. THE VIRGIN PIPE MATERIAL SHALL BE EVALUATED USING THE NOTCHED CONSTANT LIGAMENT-STRESS (NCLS) TEST AS SPECIFIED IN SECTIONS 9.5 AND 5.1 OF AASHTO M 294 AND ASTM F2306, RESPECTIVELY. ALL SMOOTH BAFFLE AND WEIR PLATES SHALL BE HIGH DENSITY POLYETHYLENE.

INSTALLATION
INSTALLATION SHALL BE IN ACCORDANCE WITH THE ADS RECOMMENDED INSTALLATION GUIDELINES, UTILIZING A CLASS I (ASTM D2321) STRUCTURAL BACKFILL MATERIAL OR FLOWABLE FILL (CLSM – CONTROLLED LOW STRENGTH MATERIAL). CONTACT YOUR LOCAL ADS REPRESENTATIVE OR VISIT WWW.ADS-PIPE.COM FOR THE LATEST INSTALLATION INSTRUCTIONS.

ADS RECOMMENDS THE USE OF "FLEXSTORM CATCH IT" INSERTS DURING CONSTRUCTION FOR ALL INLETS TO PROTECT THE SUBSURFACE STORMWATER MANAGEMENT SYSTEM FROM CONSTRUCTION SITE RUNOFF.

PERFORMANCE
WATER QUALITY UNITS SHALL REMOVE A MINIMUM OF 80% OF THE FIRST FLUSH TOTAL SUSPENDED SOLIDS (TSS) BASED ON FLOW RATES AND CORRESPONDING SIEVE SIZES SHOWN IN TABLE 1. WATER QUALITY UNITS SHALL BE INSTALLED “OFFLINE” TO PREVENT RE-SUSPENSION OF SOLIDS IN HIGH FLOW SITUATIONS. OFFLINE INSTALLATION SHALL BE CONSTRUCTED UTILIZING AN ADS BY-PASS STRUCTURE. FLOW THROUGH THE UNIT SHALL BE CONTROLLED BY AN ORIFICE FABRICATED ON THE OUTLET END OF THE STRUCTURE.

TABLE 1

I.D. IN (mm)	INLET SIZE IN (mm)	OUTLET SIZE IN (mm)	LENGTH FT (m)	TREATED FLOW RATE (CFS)	SEDIMENT VOLUME FT³ (m³)	FLOATABLES VOLUME FT³ (m³)	SIEVE SIZE
36 (900)	10 (250)	10 (250)	20 (6.1)	1.50	65 (1.8)	30 (0.8)	140
			40 (12.2)	2.38	137 (3.9)	63 (1.8)	
			20 (6.1)	0.70	65 (1.8)	30 (0.8)	200
			40 (12.2)	1.60	137 (3.9)	63 (1.8)	
42 (1050)	12 (300)	12 (300)	20 (6.1)	1.73	83 (2.3)	38 (1.1)	140
			40 (12.2)	3.66	175 (4.9)	81 (2.3)	
			20 (6.1)	0.86	83 (2.3)	38 (1.1)	200
			40 (12.2)	1.83	175 (4.9)	81 (2.3)	
48 (1200)	12 (300)	12 (300)	20 (6.1)	2.26	116 (3.3)	55 (1.6)	140
			40 (12.2)	3.94	245 (6.9)	115 (3.3)	
			20 (6.1)	1.13	116 (3.3)	55 (1.6)	200
			40 (12.2)	2.39	245 (6.9)	115 (3.3)	
60 (1500)	15 (375)	15 (375)	20 (6.1)	2.95	183 (5.2)	87 (2.5)	140
			40 (12.2)	6.23	385 (10.9)	184 (5.2)	
			20 (6.1)	1.47	183 (5.2)	87 (2.5)	200
			40 (12.2)	3.12	385 (10.9)	184 (5.2)	

©2013 ADS, INC.

4820WQA18 ADS WATER QUALITY UNIT - #3

NTS
(RIGHT HAND UNIT SHOWN)

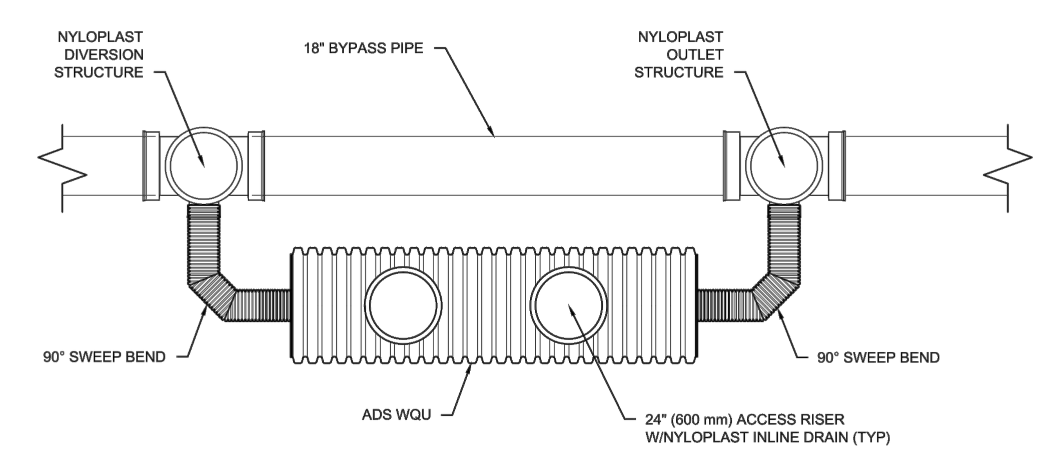

PLAN VIEW

DIRECTION OF FLOW

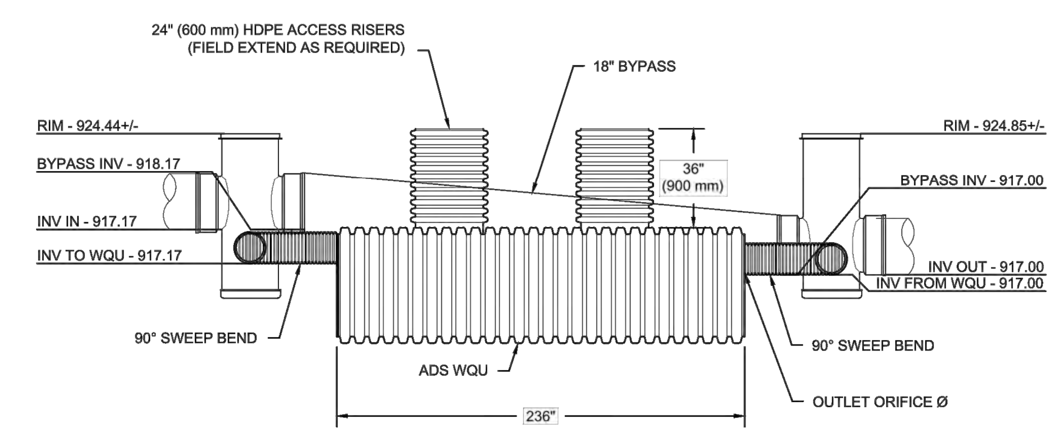

PROFILE VIEW

ADS MODEL #	MAIN PIPE Ø	SIEVE SIZE	PARTICLE SIZE (CM)	TREATED FLOW RATE (CFS)	INLET Ø	OUTLET Ø	OUTLET ORIFICE Ø	ELEVATION CHANGE*
4820WQAXX	48" (1200 mm)	140	0.0106	2.26	12" (300 mm)	12" (300 mm)	9.24" (235 mm)	14.15" (360 mm)
4820WQBXX	48" (1200 mm)	200	0.0075	1.13	12" (300 mm)	12" (300 mm)	6.53" (166 mm)	14.15" (360 mm)

XX DENOTES A BY-PASS SIZE OF 12, 15, 18, 24, 30, 36, 42, 48, OR 60" (300, 375, 450, 600, 750, 900, 1050, 1200, OR 1500 mm)
XX=00 DENOTES UNITS W/OUT A BY-PASS. THE OUTLET PIPE Ø WILL MATCH THE INLET PIPE Ø.
* ELEVATION CHANGE FOR UNITS WITHOUT A BY-PASS IS 2" (50 mm)

NOTES:
1. REFERENCE TECHNICAL NOTE 1.03 FOR ADDITIONAL INFORMATION
2. ELEVATION CHANGE DENOTES THE ELEVATION DROP FROM INVERT OF BYPASS AT INLET TO INVERT OF BYPASS AT OUTLET.

VERSA DEVELOPMENT
PITTSFIELD, MICHIGAN
DATE: 4-9-14 DRAWN: SKR
PROJECT #: 31533 CHECKED: GFI

REV	DRW	CHK	DESCRIPTION
6-17-2014	GFI		REVISED STRUCTURE ELEVATIONS
8-7-14	SKR	GFI	PER ENGINEER'S PLANS

3620WQA
RIGHT HAND
ADS WQU

ADS 4640 TRUEMAN BLVD
HILLIARD, OH 43026
1-800-733-7473
ADVANCED DRAINAGE SYSTEMS, INC

THIS DRAWING HAS BEEN PREPARED BASED ON INFORMATION PROVIDED TO ADS UNDER THE DIRECTION OF THE SITE DESIGN ENGINEER OR OTHER PROJECT REPRESENTATIVE. THE SITE DESIGN ENGINEER SHALL REVIEW THIS DRAWING PRIOR TO CONSTRUCTION. IT IS THE ULTIMATE RESPONSIBILITY OF THE SITE DESIGN ENGINEER TO ENSURE THAT THE PRODUCT(S) DEPICTED AND ALL ASSOCIATED DETAILS MEET ALL APPLICABLE LAWS, REGULATIONS, AND PROJECT REQUIREMENTS.

SHEET
4 OF 5

1. TRENCH AND BEDDING PREPARATION FOR UNIT

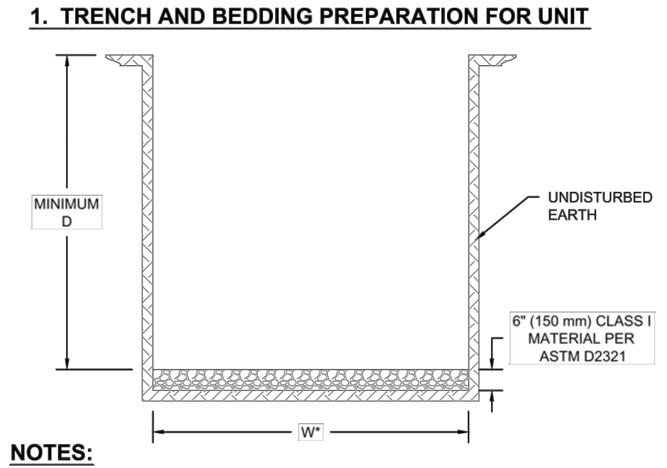

NOTES:
1. AVOID EXCESSIVE GROUND WATER IN THE TRENCH, DE-WATER AS NECESSARY.
2. PROVIDE SHEETING OR SHORING AS REQUIRED.
3. MAXIMUM COVER HEIGHT MEASURED FROM THE TOP OF THE UNIT TO FINAL GRADE SHALL NOT EXCEED 8 FEET.
4. MODIFIED TRENCH BOTTOM REQUIRED IF SOFT OR ROCK MATERIAL IS FOUND.

ADS UNIT SIZE	MIN D	MIN W*
36" (900 mm)	4.5' (1.4 m)	6.5' (2.0 m)
42" (1050 mm)	5.0' (1.5 m)	7.0' (2.1 m)
48" (1200 mm)	5.5' (1.7 m)	7.5' (2.3 m)
60" (1500 mm)	7.5' (2.3 m)	8.5' (2.6 m)

* TRENCH WIDTH DOES NOT ACCOUNT FOR BYPASS PIPE, THIS ESTIMATE IS FOR THE MAIN UNIT ONLY

2. PLACING UNIT AND INITIAL BACKFILL

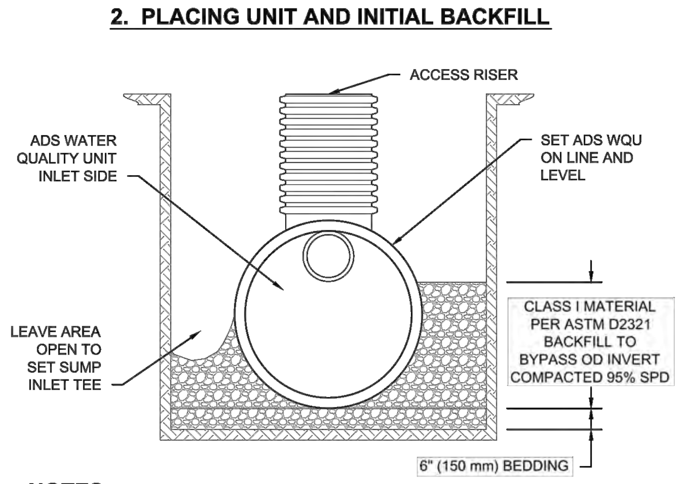

NOTES:
1. UTILIZE CARE WHEN LOWERING UNIT INTO THE TRENCH. HANDLE USING NYLON SLINGS AND TWO PICK POINTS.
2. PLACE BACKFILL AROUND THE UNIT IN UNIFORM 8-12" (200-300 mm) LIFTS, COMPACTED TO 95% SPD.
3. WHEN THE UNIT CONSISTS OF 2 SECTIONS, PLACE THE DOWNSTREAM SECTION FIRST. PROPERLY LUBE THE BELL AND SPIGOT. CONNECT AND HOME THE REMAINING SECTIONS.

3. CONNECTING THE BYPASS (OUTLET END)

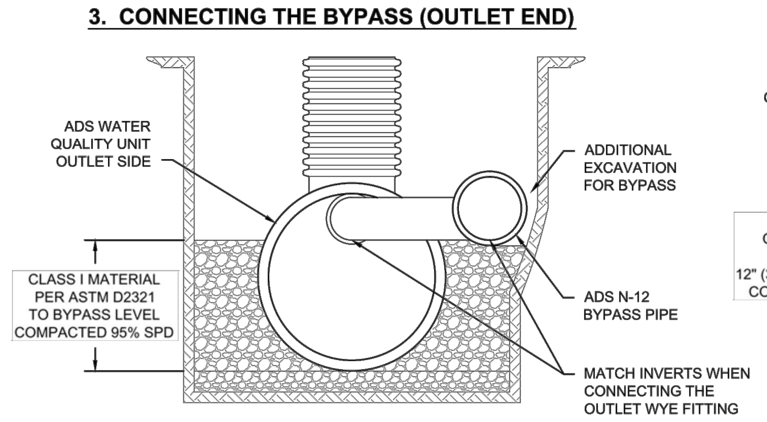

NOTES:
1. START ON THE DOWNSTREAM END BY CONNECTING THE OUTLET FITTING: BE SURE TO MATCH INVERTS OF UNIT OUTLET AND BYPASS PIPE.
2. BY-PASS FITTINGS CAN BE CONNECTED USING THE SAME COUPLERS AS THE MAIN STORM SEWER PIPE. COUPLERS MAY BE SPLIT COUPLERS, IN-LINE BELL COUPLERS, SNAP COUPLERS, BELL-BELL COUPLERS OR WELDED COUPLERS

4. CONNECTING THE BY-PASS (INLET END)

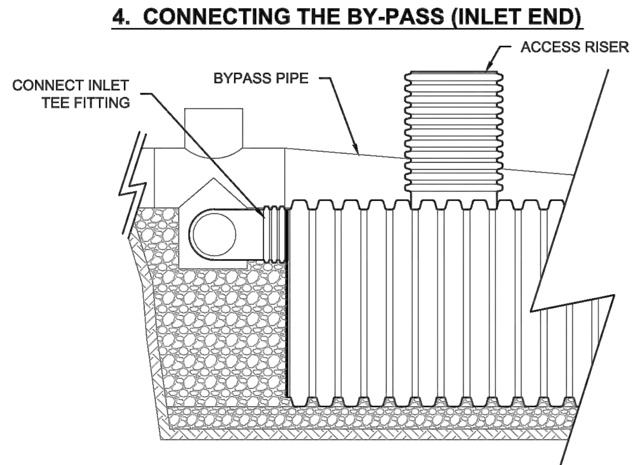

NOTES:
1. CONTINUE CONNECTING THE BY-PASS PIPE TO THE UPSTREAM END OF THE UNIT.
2. FINISH THE BY-PASS CONNECTION TO THE UNIT BY CONNECTING THE INLET TEE FITTING
3. PLEASE CONSULT WITH YOUR ADS REPRESENTATIVE ON THE AMOUNT OF FALL FROM THE BY-PASS INLET INVERT TO THE BY-PASS OUTLET INVERT

5. BACKFILL AROUND THE UNIT AND BY-PASS

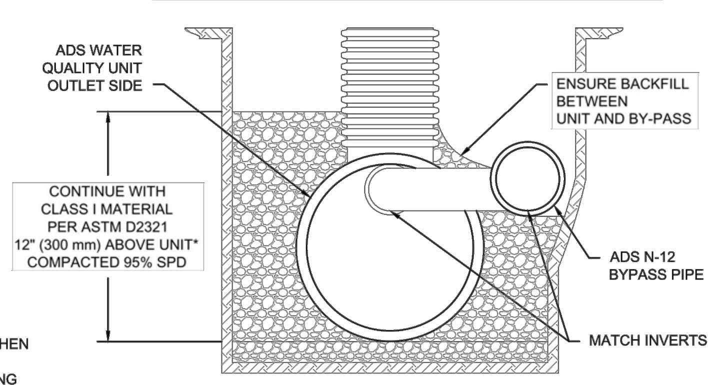

NOTES:
1. CONTINUE BACKFILL WITH CLASS I MATERIAL PER ASTM D2321 TO 12" (300 mm) ABOVE WATER QUALITY UNIT.
2. FILL UNIT WITH WATER TO THE TOP OF THE SEDIMENT WEIR PLATE ONCE BACKFILL IS PLACED AND COMPACTED 12" (300 mm) ABOVE THE UNIT.

* FOR 60" UNITS CONTINUE BACKFILL WITH CLASS I MATERIAL PER ASTM D2321 TO 24" (600 mm) ABOVE WATER QUALITY UNIT.

6. FINAL COVER AND RISER EXTENSIONS

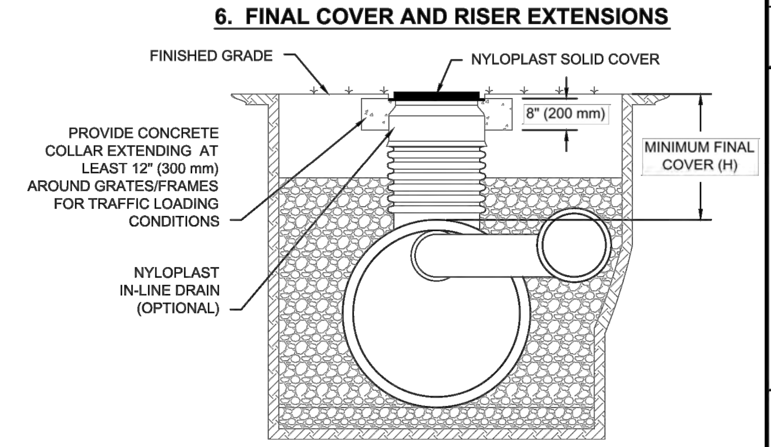

NOTES:
1. PLEASE FOLLOW THE INSTALLATION GUIDELINES OF ADS PRODUCT NOTE 3.115 WHEN INSTALLING ADS N-12 PIPE ON THE BY-PASS CONNECTION OR IN OTHER DRAINAGE APPLICATIONS ON THE SITE.
2. ALL RISER EXTENTIONS TO GRADE SHOULD BE COORDINATED THROUGH YOUR ADS REPRESENTATIVE.

ADS UNIT SIZE	MIN H TRAFFIC	MIN H NON-TRAFFIC
36" (900 mm)	24" (600 mm)	12" (300 mm)
42" (1050 mm)	24" (600 mm)	12" (300 mm)
48" (1200 mm)	24" (600 mm)	12" (300 mm)
60" (1500 mm)	24" (600 mm)	24" (600 mm)

MEASURED FROM THE TOP OF THE PIPE TO THE BOTTOM OF BITUMINOUS PAVEMENT OR TOP OF RIGID PAVEMENT..

SHEET
5 OF 5

MANUFACTURED PRETREATMENT STRUCTION - ADS SYSTEM OR TOWNSHIP APPROVED EQUAL

giffels webster
Engineers
Surveyors
Planners
Landscape Architects
Environmental Specialists

1025 E. Maple Road
Suite 100
Birmingham, MI 48009
p (248) 852-3100
f (248) 852-6372
www.giffelswebster.com

Executive:	M.P.
Manager:	J.K.A.
Designer:	N.M.T.
Quality Control:	
Section:	7
	T-3-S R-6-E

Professional Seal:

811 Know what's below. Call before you dig.

DATE:	ISSUE:
06.26.2014	SUBMIT PRELIMINARY SITE PLAN
07.29.2014	RESUBMIT PRELIMINARY SITE PLAN WITH REVISED LAYOUT
09.03.2014	SUBMIT FINAL SITE PLAN

Developed For:
VERSA DEVELOPMENT

25900 W. 11 MILE ROAD
SUITE 250
SOUTHFIELD, MI 48034
(248) 416-1985

PRETREATMENT STRUCTURE DETAILS WQU 3

VERSA PITTSFIELD PHASE 2

PITTSFIELD TOWNSHIP
WASHTENAW COUNTY
MICHIGAN

Date:	12.14.2012
Scale:	NA
Sheet:	19
Project:	18270.00

Copyright © 2012 Giffels Webster.
No reproduction shall be made without the prior written consent of Giffels Webster.

H:\18\18200\18270 Versa Pittsfield\Drawing Files\Engineering\Phase 2\19 Pretreatment-Detention Details.dwg

PROJECT INFORMATION	
ENGINEERED PRODUCT MANAGER:	CHRIS OWEN (248) 431-1361 CHRIS.OWEN@ADS-PIPE.COM
ADS SALES REP:	ANDY KELLER (248) 417-4693 ANDY.KELLER@ADS-PIPE.COM
PROJECT NO:	31533

ADVANCED DRAINAGE SYSTEMS, INC.

VERSA DEVELOPMENT

PITTSFIELD, MICHIGAN

ADS RETENTION/DETENTION PIPE SYSTEM SPECIFICATION

SCOPE
THIS SPECIFICATION DESCRIBES ADS RETENTION/DETENTION PIPE SYSTEMS FOR USE IN NON-PRESSURE GRAVITY-FLOW STORM WATER COLLECTION SYSTEMS UTILIZING A CONTINUOUS OUTFALL STRUCTURE.

PIPE REQUIREMENTS
ADS RETENTION/DETENTION SYSTEMS MAY UTILIZE ANY OF THE VARIOUS PIPE PRODUCTS BELOW:
- N-12® STIB PIPE (PER AASHTO) SHALL MEET AASHTO M 294, TYPE S OR ASTM F2306

ALL PRODUCTS SHALL HAVE A SMOOTH INTERIOR AND ANNULAR EXTERIOR CORRUGATIONS. ALL STIB PIPE PRODUCTS ARE AVAILABLE AS PERFORATED OR NON-PERFORATED. WTIB PIPE PRODUCTS ARE ONLY AVAILABLE AS NON-PERFORATED. PRODUCT-SPECIFIC PIPE SPECIFICATIONS ARE AVAILABLE IN THE DRAINAGE HANDBOOK SECTION 1 "SPECIFICATIONS".

JOINT PERFORMANCE
PLAIN END / SOIL-TIGHT (STIB):
STIB PIPE SHALL BE JOINED USING A BELL AND SPIGOT JOINT. THE BELL AND SPIGOT JOINT SHALL MEET THE SOIL-TIGHT REQUIREMENTS OF ASTM F2306 AND GASKETS SHALL MEET THE REQUIREMENTS OF ASTM F477.

PLAIN END PIPE AND FITTINGS CONNECTIONS SHALL BE JOINED WITH COUPLING BANDS COVERING AT LEAST TWO FULL CORRUGATIONS ON EACH END OF THE PIPE. GASKETED SOIL-TIGHT COUPLING BAND CONNECTIONS SHALL INCORPORATE A CLOSED-CELL SYNTHETIC EXPANDED RUBBER GASKET MEETING THE REQUIREMENTS OF ASTM D1056 GRADE 2A2. GASKETS, WHEN APPLICABLE, SHALL BE INSTALLED BY THE PIPE MANUFACTURER.

FITTINGS
FITTINGS SHALL CONFORM TO ASTM F2306 AND MEET JOINT PERFORMANCE INDICATED ABOVE FOR FITTINGS CONNECTIONS. CUSTOM FITTINGS ARE AVAILABLE AND MAY REQUIRE SPECIAL INSTALLATION CRITERION.

INSTALLATION
INSTALLATION SHALL BE IN ACCORDANCE WITH ASTM D2321 AND ADS RECOMMENDED INSTALLATION GUIDELINES, WITH THE EXCEPTION THAT MINIMUM COVER IN NON-TRAFFIC AREAS FOR 12-60 INCH (300-1500 mm) DIAMETERS SHALL BE 1 FT (0.3 m). MINIMUM COVER IN TRAFFICKED AREAS FOR 12-36 INCH (300-900 mm) DIAMETERS SHALL BE 1 FT (0.3 m) AND FOR 42-60 INCH (1050-1500 mm) DIAMETERS, THE MINIMUM COVER SHALL BE 2 FT (0.6 m). BACKFILL SHALL CONSIST OF CLASS I (COMPACTED) OR CLASS II (MINIMUM 90% SPD) MATERIAL, WITH THE EXCEPTION THAT 60 INCH (1500 mm) SYSTEMS SHALL USE CLASS I MATERIAL ONLY. MINIMUM COVER HEIGHTS DO NOT ACCOUNT FOR PIPE BUOYANCY. REFER TO ADS TECHNICAL NOTE 5.05 "PIPE FLOTATION" FOR BUOYANCY DESIGN CONSIDERATIONS. MAXIMUM COVER OVER SYSTEM USING STANDARD BACKFILL IS 8 FT (2.4 m); CONTACT A REPRESENTATIVE WHEN MAXIMUM FILL HEIGHT MAY BE EXCEEDED. ADDITIONAL INSTALLATION REQUIREMENTS ARE PROVIDED IN THE DRAINAGE HANDBOOK SECTION 6 "RETENTION/DETENTION".

ADS RECOMMENDS THE USE OF "FLEXSTORM CATCH IT" INSERTS DURING CONSTRUCTION FOR ALL INLETS TO PROTECT THE SUBSURFACE STORMWATER MANAGEMENT SYSTEM FROM CONSTRUCTION SITE RUNOFF.

NOTES:

1) ALL ELEVATIONS, DIMENSIONS AND LOCATIONS OF RISERS, INLETS AND OUTLETS, SHALL BE VERIFIED BY THE ENGINEER PRIOR TO RELEASING FOR FABRICATION.
2) IN SITUATIONS WHERE A FINE-GRAINED BACKFILL MATERIAL IS USED ADJACENT TO THE PIPE SYSTEM, AND ESPECIALLY INVOLVING GROUND WATER CONDITIONS, CONSIDERATION SHOULD BE GIVEN TO THE USE OF GASKETED PIPE JOINTS. AT THE VERY LEAST THE PIPE JOINTS SHOULD BE WRAPPED IN A SUITABLE, NON-WOVEN GEOTEXTILE FABRIC TO PREVENT INFILTRATION OF FINES INTO THE PIPE SYSTEM.
3) CONSIDERATION FOR CONSTRUCTION EQUIPMENT LOADS MUST BE TAKEN INTO ACCOUNT.
4) ALL PIPE DIMENSIONS ARE SUBJECT TO MANUFACTURERS TOLERANCES.
5) ALL RISERS TO BE FIELD EXTENDED OR TRIMMED TO FINAL GRADE.

THE UNDERSIGNED HERBY APPROVES THE ATTACHED PAGES.

CUSTOMER ____________ DATE

©2013 ADS, INC.

NORTHEAST BED

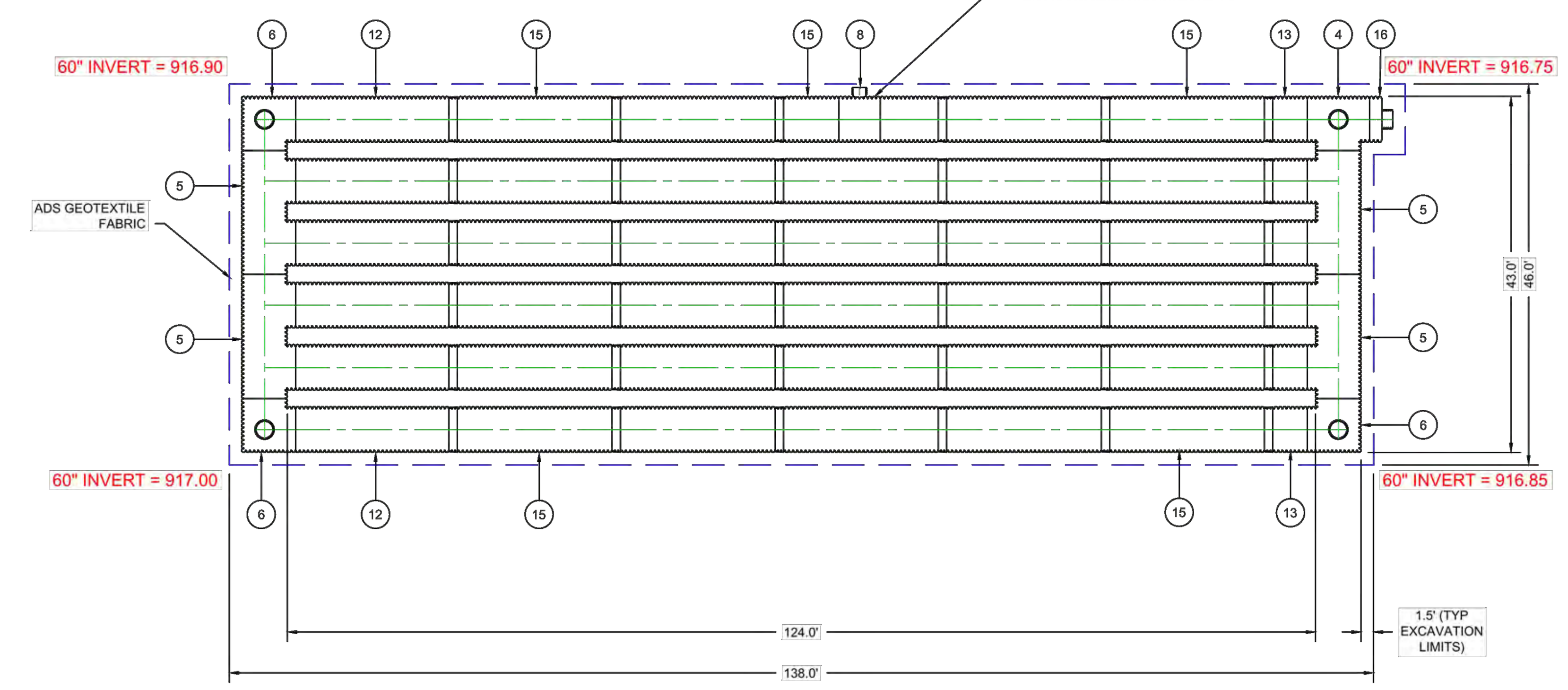

* SYSTEM INVERTS TO BE VERIFIED BY DESIGN ENGINEER.

VERSA DEVELOPMENT
PITTSFIELD, MICHIGAN
DATE: 9-23-13 | DRAWN: SKR
PROJECT #: 31533 | CHECKED: KAM

REV	DRW	CHK	DESCRIPTION
10-22-13	AJD	KAM	REVISED LATERAL LENGTHS
1-29-14	SKR	KAM	BED CONNECTIONS REVISED
4-7-14	SKR	KAM	PIPE INVERTS ADDED
5-13-14	SKR	KAM	FLOWABLE FILL ADDED & REDUCERS
8-19-14	SKR	KAP	PER ENGINEER'S REVISIONS

48" & 60" STUB SOLID DETENTION SYSTEM
HDPE N-12

4640 TRUEMAN BLVD
HILLIARD, OH 43026
1-800-733-7473

0 15' 30'

THIS DRAWING HAS BEEN PREPARED BASED ON INFORMATION PROVIDED TO ADS UNDER THE DIRECTION OF THE SITE DESIGN ENGINEER OR OTHER PROJECT REPRESENTATIVE. THE SITE DESIGN ENGINEER SHALL REVIEW THIS DRAWING PRIOR TO CONSTRUCTION. IT IS THE ULTIMATE RESPONSIBILITY OF THE SITE DESIGN ENGINEER TO ENSURE THAT THE PRODUCT(S) DEPICTED AND ALL ASSOCIATED DETAILS MEET ALL APPLICABLE LAWS, REGULATIONS, AND PROJECT REQUIREMENTS.

SHEET 3 OF 7

60" DOUBLE MANIFOLD TEE

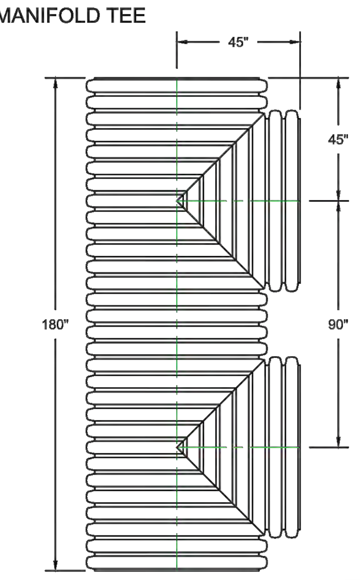

ITEM #: 5
QTY: 4
6052AN

48" X 90° MANIFOLD BEND W/24" RISER
PHASE 1 COMPONENT

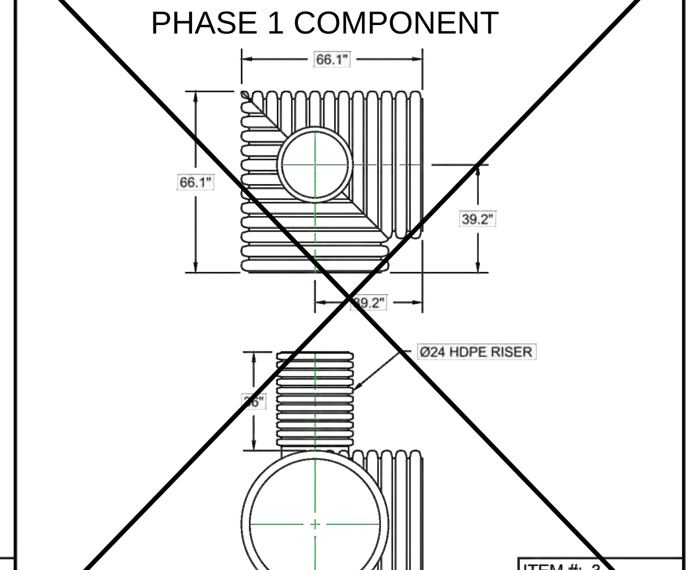

ITEM #: 3
QTY: 3
4898ANC-1

48" SINGLE MANIFOLD TEE W/24" RISER
PHASE 1 COMPONENT

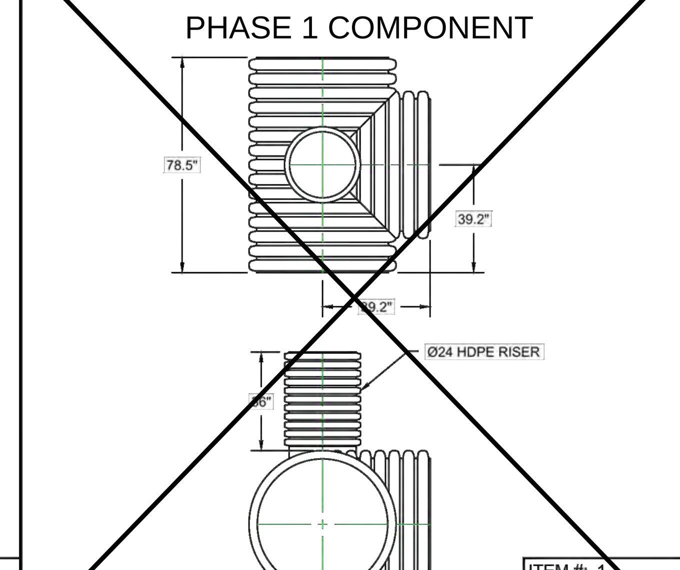

ITEM #: 1
QTY: 1
4851ANC-1

60" X 90° MANIFOLD BEND

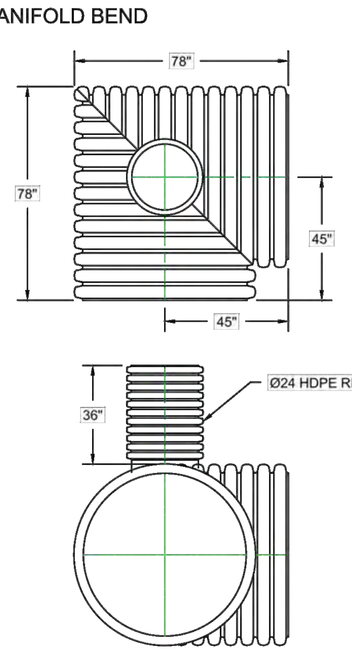

ITEM #: 6
QTY: 3
6098ANC-1

60" SINGLE MANIFOLD TEE W/24" RISER

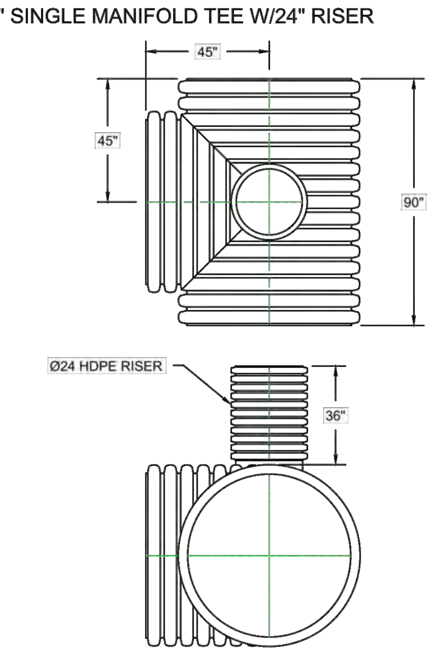

ITEM #: 4
QTY: 1
6051ANC_1

48" DOUBLE MANIFOLD TEE
PHASE 1 COMPONENT

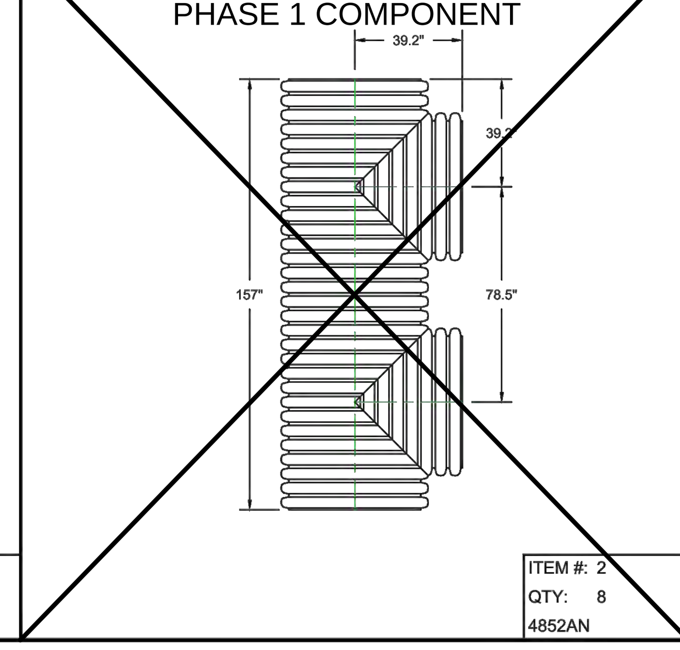

ITEM #: 2
QTY: 8
4852AN

VERSA DEVELOPMENT
PITTSFIELD, MICHIGAN
DATE: 9-23-13 | DRAWN: SKR
PROJECT #: 31533 | CHECKED: KAM

SHEET 4 OF 7

48" X 18" ECCENTRIC REDUCING TEE
PHASE 1 COMPONENT

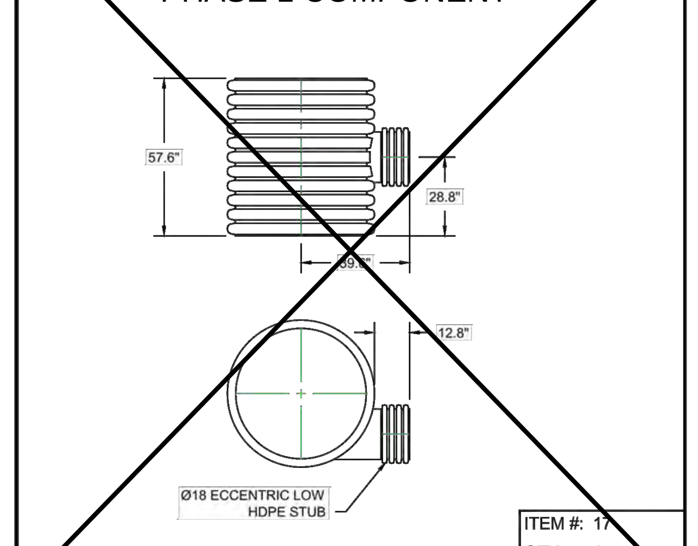

ITEM #: 17
QTY: 1
TEE_3

48" X 18" REDUCING
PHASE 1 COMPONENT

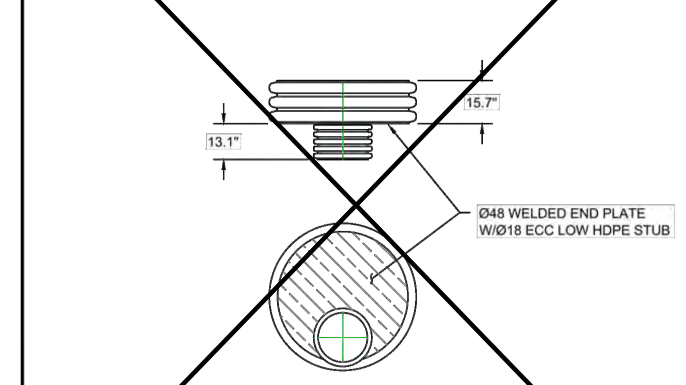

ITEM #: 9
QTY: 1
4876AN

48" X 12" ECCENTRIC REDUCING TEE
PHASE 1 COMPONENT

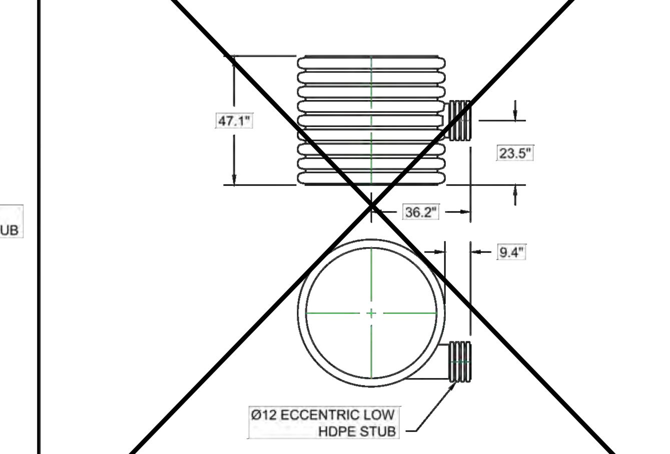

ITEM #: 7
QTY: 1
TEE_1

INTENTIONALLY LEFT BLANK

60" X 24" REDUCING

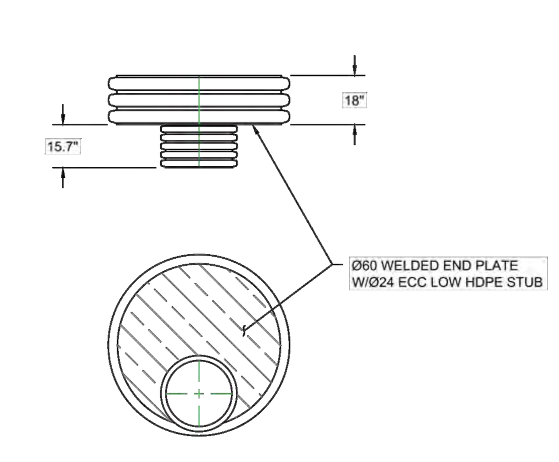

ITEM #: 16
QTY: 1
6077AN

60" X 18" ECCENTRIC REDUCING TEE

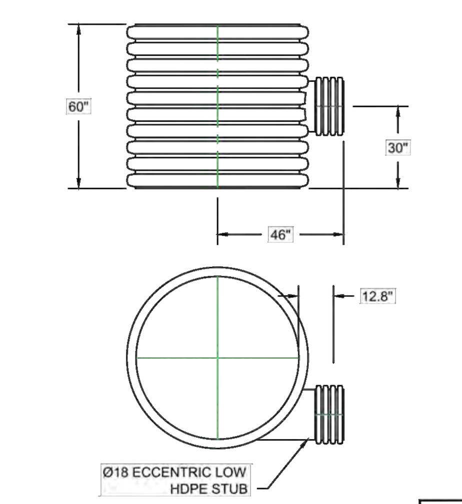

ITEM #: 8
QTY: 1
TEE_2

SHEET 5 OF 7

giffels webster
Engineers
Surveyors
Planners
Landscape Architects
Environmental Specialists

1025 E. Maple Road
Suite 100
Birmingham, MI 48009
p (248) 852-3100
f (248) 852-6372
www.giffelswebster.com

Executive:	M.P.
Manager:	J.K.A.
Designer:	N.M.T.
Quality Control:	
Section:	7
	T-3-S R-6-E

Professional Seal:

811 Know what's below. Call before you dig.

DATE:	ISSUE:
06.26.2014	SUBMIT PRELIMINARY SITE PLAN
07.29.2014	RESUBMIT PRELIMINARY SITE PLAN WITH REVISED LAYOUT
09.03.2014	SUBMIT FINAL SITE PLAN

Developed For:
VERSA DEVELOPMENT

25900 W. 11 MILE ROAD
SUITE 250
SOUTHFIELD, MI 48034
(248) 416-1985

UNDERGROUND DETENTION DETAILS

VERSA PITTSFIELD PHASE 2

PITTSFIELD TOWNSHIP
WASHTENAW COUNTY
MICHIGAN

UNDERGROUND DETENTION DETAILS - ADS SYSTEM OR TOWNSHIP APPROVED EQUAL

Date:	12.14.2012
Scale:	NA
Sheet:	20
Project:	18270.00

Copyright © 2012 Giffels Webster.
No reproduction shall be made without the prior written consent of Giffels Webster.

H:\18\18200\18270 Versa Pittsfield\Drawing Files\Engineering\Phase 2\19 Pretreatment-Detention Details.dwg

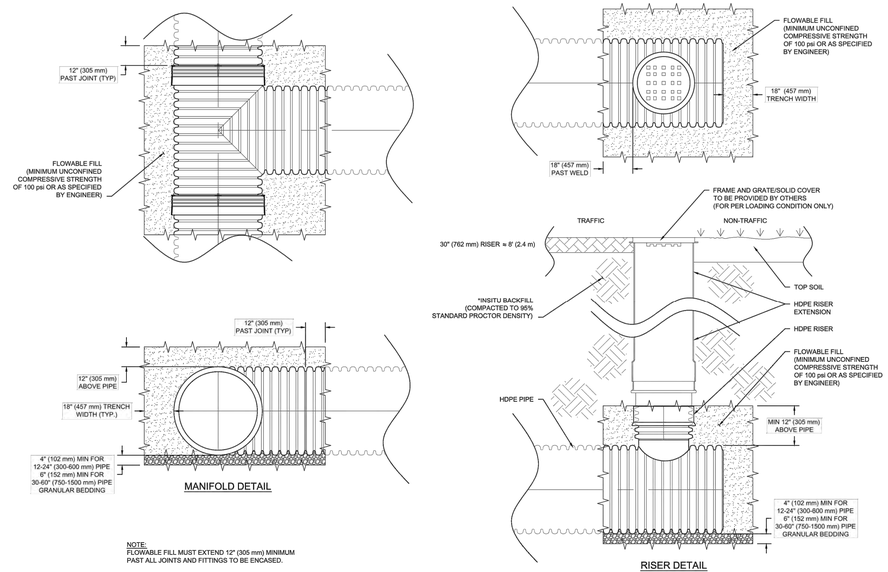

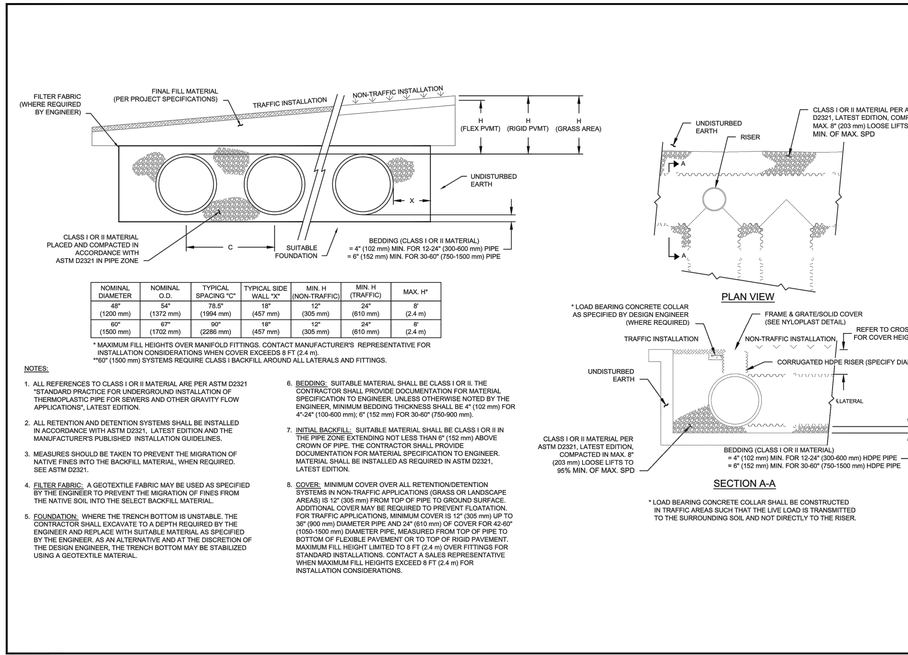

NOMINAL DIAMETER	NOMINAL O.D.	TYPICAL SPACING "C"	TYPICAL SIDE WALL "X"	MIN. H (NON-TRAFFIC)	MIN. H (TRAFFIC)	MAX. H*
48" (1200 mm)	54" (1372 mm)	78.5" (1994 mm)	18" (457 mm)	12" (305 mm)	24" (610 mm)	8' (2.4 m)
60" (1500 mm)	67" (1702 mm)	90" (2286 mm)	18" (457 mm)	12" (305 mm)	24" (610 mm)	8' (2.4 m)

* MAXIMUM FILL HEIGHTS OVER MANIFOLD FITTINGS. CONTACT MANUFACTURER'S REPRESENTATIVE FOR INSTALLATION CONSIDERATIONS WHEN COVER EXCEEDS 8 FT (2.4 m).
**60" (1500 mm) SYSTEMS REQUIRE CLASS I BACKFILL AROUND ALL LATERALS AND FITTINGS.

NOTES:

1. ALL REFERENCES TO CLASS I OR II MATERIAL ARE PER ASTM D2321 "STANDARD PRACTICE FOR UNDERGROUND INSTALLATION OF THERMOPLASTIC PIPE FOR SEWERS AND OTHER GRAVITY FLOW APPLICATIONS", LATEST EDITION.
2. ALL RETENTION AND DETENTION SYSTEMS SHALL BE INSTALLED IN ACCORDANCE WITH ASTM D2321, LATEST EDITION AND THE MANUFACTURER'S PUBLISHED INSTALLATION GUIDELINES.
3. MEASURES SHOULD BE TAKEN TO PREVENT THE MIGRATION OF NATIVE FINES INTO THE BACKFILL MATERIAL, WHEN REQUIRED. SEE ASTM D2321.
4. FILTER FABRIC: A GEOTEXTILE FABRIC MAY BE USED AS SPECIFIED BY THE ENGINEER TO PREVENT THE MIGRATION OF FINES FROM THE NATIVE SOIL INTO THE SELECT BACKFILL MATERIAL.
5. FOUNDATION: WHERE THE TRENCH BOTTOM IS UNSTABLE, THE CONTRACTOR SHALL EXCAVATE TO A DEPTH REQUIRED BY THE ENGINEER AND REPLACE WITH SUITABLE MATERIAL AS SPECIFIED BY THE ENGINEER. AS AN ALTERNATIVE AND AT THE DISCRETION OF THE DESIGN ENGINEER, THE TRENCH BOTTOM MAY BE STABILIZED USING A GEOTEXTILE MATERIAL.
6. BEDDING: SUITABLE MATERIAL SHALL BE CLASS I OR II. THE CONTRACTOR SHALL PROVIDE DOCUMENTATION FOR MATERIAL SPECIFICATION TO ENGINEER. UNLESS OTHERWISE NOTED BY THE ENGINEER, MINIMUM BEDDING THICKNESS SHALL BE 4" (102 mm) FOR 4"-24" (100-600 mm); 6" (152 mm) FOR 30-60" (750-900 mm).
7. INITIAL BACKFILL: SUITABLE MATERIAL SHALL BE CLASS I OR II IN THE PIPE ZONE EXTENDING NOT LESS THAN 6" (152 mm) ABOVE CROWN OF PIPE. THE CONTRACTOR SHALL PROVIDE DOCUMENTATION FOR MATERIAL SPECIFICATION TO ENGINEER. MATERIAL SHALL BE INSTALLED AS REQUIRED IN ASTM D2321, LATEST EDITION.
8. COVER: MINIMUM COVER OVER ALL RETENTION/DETENTION SYSTEMS IN NON-TRAFFIC APPLICATIONS (GRASS OR LANDSCAPE AREAS) IS 12" (305 mm) FROM TOP OF PIPE TO GROUND SURFACE. ADDITIONAL COVER MAY BE REQUIRED TO PREVENT FLOATATION. FOR TRAFFIC APPLICATIONS, MINIMUM COVER IS 12" (305 mm) UP TO 30" (900 mm) DIAMETER PIPE AND 24" (610 mm) OF COVER FOR 42-60" (1050-1500 mm) DIAMETER PIPE, MEASURED FROM TOP OF PIPE TO BOTTOM OF FLEXIBLE PAVEMENT OR TO TOP OF RIGID PAVEMENT. MAXIMUM FILL HEIGHT LIMITED TO 8 FT (2.4 m) OVER FITTINGS FOR STANDARD INSTALLATIONS. CONTACT A SALES REPRESENTATIVE WHEN MAXIMUM FILL HEIGHTS EXCEED 8 FT (2.4 m) FOR INSTALLATION CONSIDERATIONS.

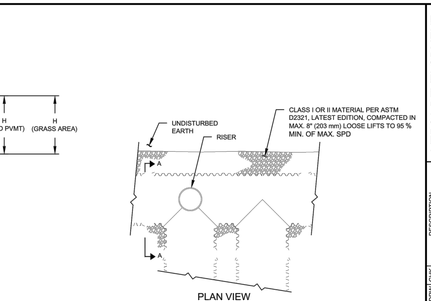

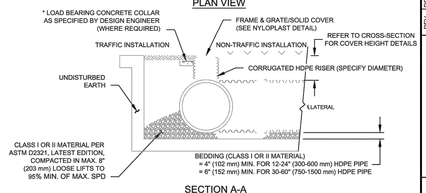

SECTION A-A

* LOAD BEARING CONCRETE COLLAR SHALL BE CONSTRUCTED IN TRAFFIC AREAS SUCH THAT THE LIVE LOAD IS TRANSMITTED TO THE SURROUNDING SOIL AND NOT DIRECTLY TO THE RISER.

UNDERGROUND DETENTION DETAILS - ADS SYSTEM OR TOWNSHIP APPROVED EQUAL

VERSA DEVELOPMENT
PITTSFIELD, MICHIGAN

REV	DRW	CHK	DESCRIPTION
5-23-13	KJO	KAM	REVISED LATERAL LENGTHS
9-25-13	SKR	KAM	REVISED OUTLET PIPE
4-7-14	SKR	KAM	PIPE INVERTS ADDED
5-15-14	SKR	KAM	FLOWABLE FILL ADDED & REVISIONS
5-30-14	SKR	KAM	ADDED TYP. SECTION

DATE: 9-23-13
DRAWN: SKR
CHECKED: KAM
PROJECT #: 31533

THESE PLANS ARE THE PROPERTY OF ADS AND ARE NOT TO BE USED IN WHOLE OR IN PART, FOR ANY PROJECT OTHER THAN THE ONE FOR WHICH THEY WERE PREPARED, WITHOUT THE EXPRESSED PRIOR CONSENT OF ADS. © 2014 ADS

ADS TRUEMAN BLVD
HILLIARD, OH 43026
1-800-733-3413

40' & 60" STOR SOLID DETENTION SYSTEM

HDPE N-12

ADS DESIGNED AND DETAILED THIS INFORMATION PURSUANT TO THE CURRENT AASHTO LRFD BRIDGE DESIGN SPECIFICATIONS AND ASTM F2418. IT IS THE ENGINEER OF RECORD'S RESPONSIBILITY TO DESIGN THE PROJECT SPECIFIC INSTALLATION AND ALL ASPECTS OF THE SITE DESIGN INCLUDE BUT ARE NOT LIMITED TO: SITE GRADING, SURFACE LOADS, ADJACENT STRUCTURES AND ALL APPLICABLE LOCAL REGULATIONS. ADS ASSUMES NO RESPONSIBILITY FOR SITE DESIGN AND/OR TO ENSURE THAT THE PRODUCTS SPECIFIED, INCLUDING THIS DRAWING, ARE SUITABLE FOR THE INTENDED USE. IT IS THE ENGINEER OF RECORD'S RESPONSIBILITY TO REVIEW THESE DRAWINGS AND ALL OTHER PROJECT DOCUMENTS.

SHEET 6 OF 7

SHEET 7 OF 7

giffels webster
Engineers
Surveyors
Planners
Landscape Architects
Environmental Specialists
1025 E. Maple Road
Suite 100
Birmingham, MI 48009
p (248) 852-3100
f (248) 852-6372
www.giffelswebster.com

Executive:	M.P.
Manager:	J.K.A.
Designer:	N.M.T.
Quality Control:	
Section:	7
	T-3-S R-6-E

Professional Seal:

811 Know what's below. Call before you dig.

DATE:	ISSUE:
06.26.2014	SUBMIT PRELIMINARY SITE PLAN
07.29.2014	RESUBMIT PRELIMINARY SITE PLAN WITH REVISED LAYOUT
09.03.2014	SUBMIT FINAL SITE PLAN

Developed For:

VERSA DEVELOPMENT
25900 W. 11 MILE ROAD
SUITE 250
SOUTHFIELD, MI 48034
(248) 416-1985

UNDERGROUND DETENTION DETAILS

VERSA PITTSFIELD PHASE 2

PITTSFIELD TOWNSHIP
WASHTENAW COUNTY
MICHIGAN

Date:	12.14.2012
Scale:	NA
Sheet:	21
Project:	18270.00

Copyright © 2012 Giffels Webster.
No reproduction shall be made without the prior written consent of Giffels Webster.

H:\18\18200\18270 Versa Pittsfield\Drawing Files\Engineering\Phase 2\19 Pretreatment-Detention Details.dwg

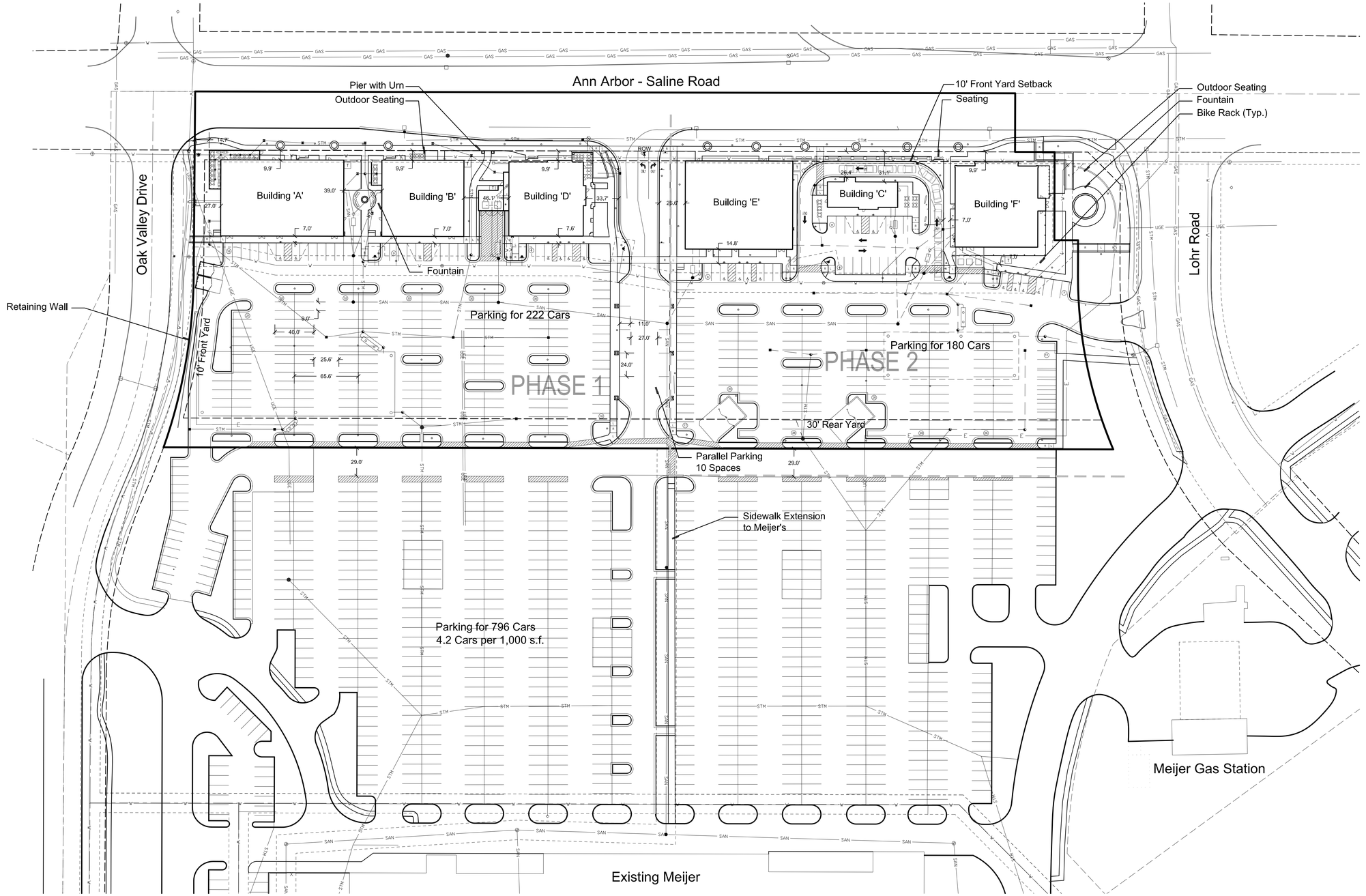

Site Summary

Existing Zoning	FB (Form Based Zoning)	Building Frontage Length	676 l.f. (Excluding Access Drive)	Building Height	
Site Area	7.50 Acres	2 Story Frontage Required	473' (70% x 676)	Minimum Height	26'
Less ROW	1.16 Acres	2 Story Frontage Provided	478' (566' with 12'-15' Screen Walls)	Height Shown	23'
Net Site Area	6.34 Acres	3 Story Frontage Required	338' (50% x 676)		
		3 Story Frontage Provided	0	Parking	
Setbacks				Building Area	41,902 s.f.
Front Yard Setback Required (Ann Arbor-Saline Road)	10' to the Building Line	Impervious Surface Allowed	5.7 s.f. (6.34 Ac x 90%)	Parking Required	TBD *
Front Yard Setback Provided	9.9' to Buildings A-E	Pervious Area Provided	0.86 Acres	Parking Shown	412 Spaces
	12.7' to Building F	Impervious Surface Provided	5.48 s.f. (6.34 - 0.86)	Parking Ratio	10.0 per 1,000 s.f. Gross
	0' to Outdoor Seating	Landscape Area Required	1.27 Ac (6.34 ac x 20%)		
Front Yard Setback Required (Oak Valley Drive)	10' to the Building Line	Open Space 0.86 Ac		Restaurant Parking Standards are Based on Number of Employees and Seating Capacity. These Quantities are not Known at this Time.	
Front Yard Setback Provided	27.0' to Building	Outdoor Seating 0.09 Ac			
	14.7' to Outdoor Seating	Streetscape 0.06 Ac		Meijer	
Rear Yard Required	30'	Landscape Area Provided	1.01 Ac (15.9%)	Building Area	235,396 s.f.
Rear Yard Provided	196'	ROW Improvements 0.13 Ac		Parking Required	784 Spaces (1 per 300 s.f.)
Side Yard Required	0'	Corner Fountain 0.16 Ac		Parking Provided	796 Spaces
Side Yard Provided	NA	Landscape Area Provided With Off-Site Ammenities	1.30 Ac (20.5%)		

ULI-Shared Parking Standards

Scenario A - Peak Hour	Parking Spaces Required	Area	Visitor	Employee
2 Community Shopping Center (Retail)	65.48	16,372	3.20	0.80
3 Fine / Causal Dining	476.1	23,570	17.00	3.20
1 Fast Food (Coffee)	27.44	1,960	12.00	2.00
Total Parking	569.02	41902		

Scenario B - Peak Hour	Parking Spaces Required	Area	Area	Area
5 Fine / Casual Dining	682.54	39,942	39,942	39,942
1 Fast Food (Coffee)	21.6	1,960	1,960	1,960
Total Parking	704.14	41902	41902	41902
Parking based on Weekend Standards per 1,000 s.f. Gross Leasable Area				

Peak Hours (100% Capacity)	
Fine / Casual Dining	8:00 PM
Fast Food (Coffee)	Noon and 1:00 PM
Community Shopping Center (Retail)	2:00 and 3:00 PM

© 2013 Allen Design L.L.C.

ALLEN DESIGN
LAND PLANNING / LANDSCAPE ARCHITECTURE
557 CARPENTER • NORTHVILLE, MI 48167
248 467 4668 • Fax 248 349 0559
Email: jca@wideopenwest.com

Versa | real estate

Seal:

STATE OF MICHIGAN
JAMES C. ALLEN
Landscape Architect
REGISTERED LANDSCAPE ARCHITECT

Title:

Site Plan

Project:

Pittsfield Commercial
Pittsfield Township, Michigan

Prepared for:

Versa Development
25900 West 11 Mile, Suite 250
Southfield, Michigan 48034

Revision:	Issued:
Submission	December 14, 2012
Resubmit Site Plan	April 25, 2013
Revised	August 15, 2013
Revised	September 26, 2013
Revised	October 17, 2013
Revised	November 22, 2013
Revised	January 30, 2014
Revised	March 17, 2014
Revised	June 27, 2014
Revised	July 25, 2014
Revised	September 3, 2014

Job Number:

12-028

Drawn By:	Checked By:
jca	jca

0' 25' 50'

NORTH
1"=50'

Sheet No.

22-SP-1

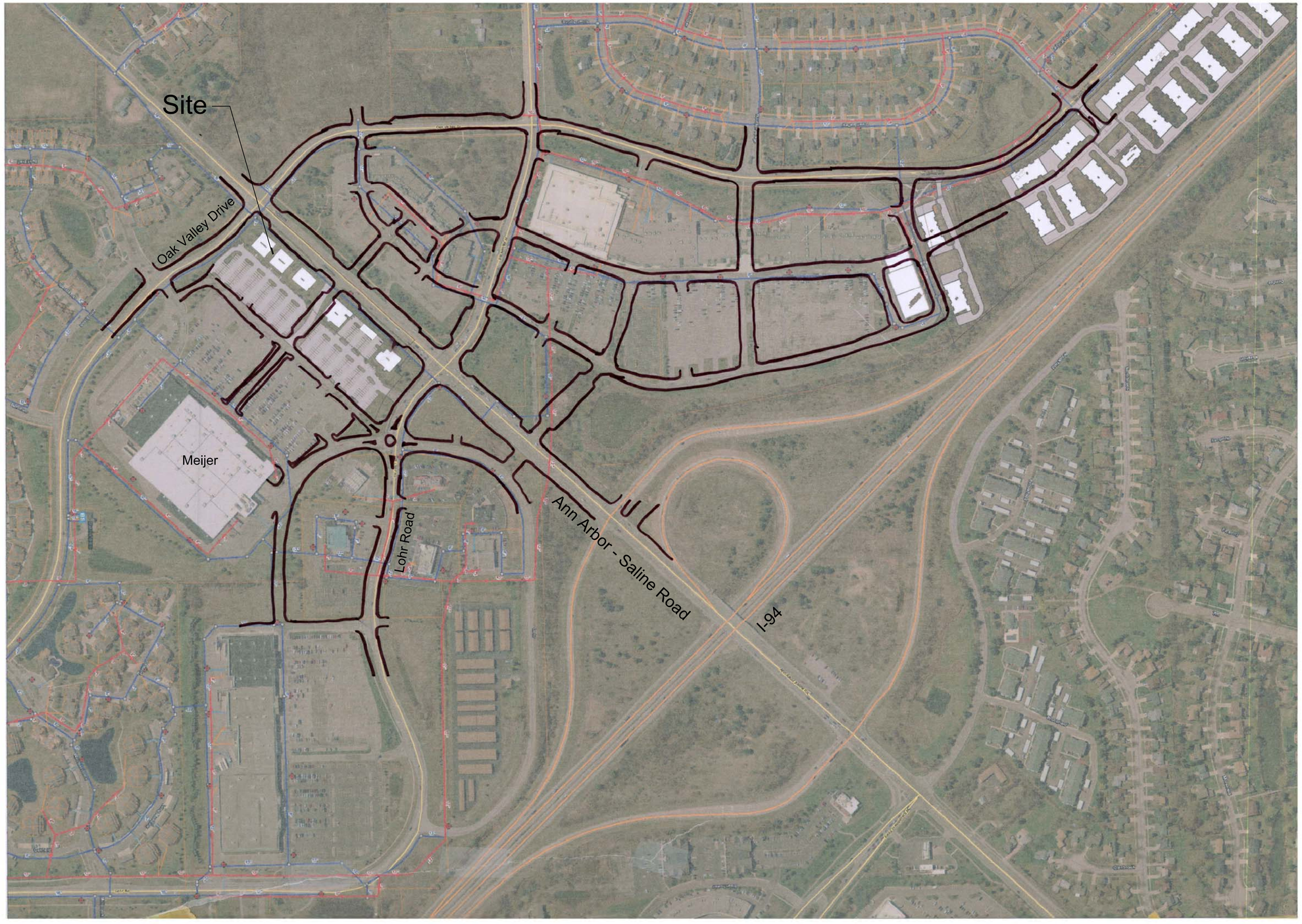

Plan Courtesy of Pittsfield Charter Township Planning Department

© 2013 Allen Design L.L.C.

ALLEN DESIGN
LAND PLANNING / LANDSCAPE ARCHITECTURE
557 CARPENTER • NORTHVILLE, MI 48167
248 467 4668 • Fax 248 349 0559
Email: jca@wideopenwest.com

Versa | real estate

Seal:

Title:
Context Plan

Project:
Pittsfield Commercial
Pittsfield Township, Michigan

Prepared for:
Versa Development
25900 West 11 Mile, Suite 250
Southfield, Michigan 48034

Revision:	Issued:
Submission	December 14, 2012
Resubmit Site Plan	April 25, 2013
Revised	June 21, 2013
Revised	August 15, 2013
Revised	September 26, 2013
Revised	October 17, 2013
Revised	November 22, 2013
Revised	January 30, 2014
Revised	March 17, 2014
Revised	June 27, 2014
Revised	July 25, 2014

Job Number:
Revised

Drawn By:	Checked By:
September 3, 2014	jca

0' 50' 100' 200'

NORTH
1"=200'

Sheet No.

23-SP-2

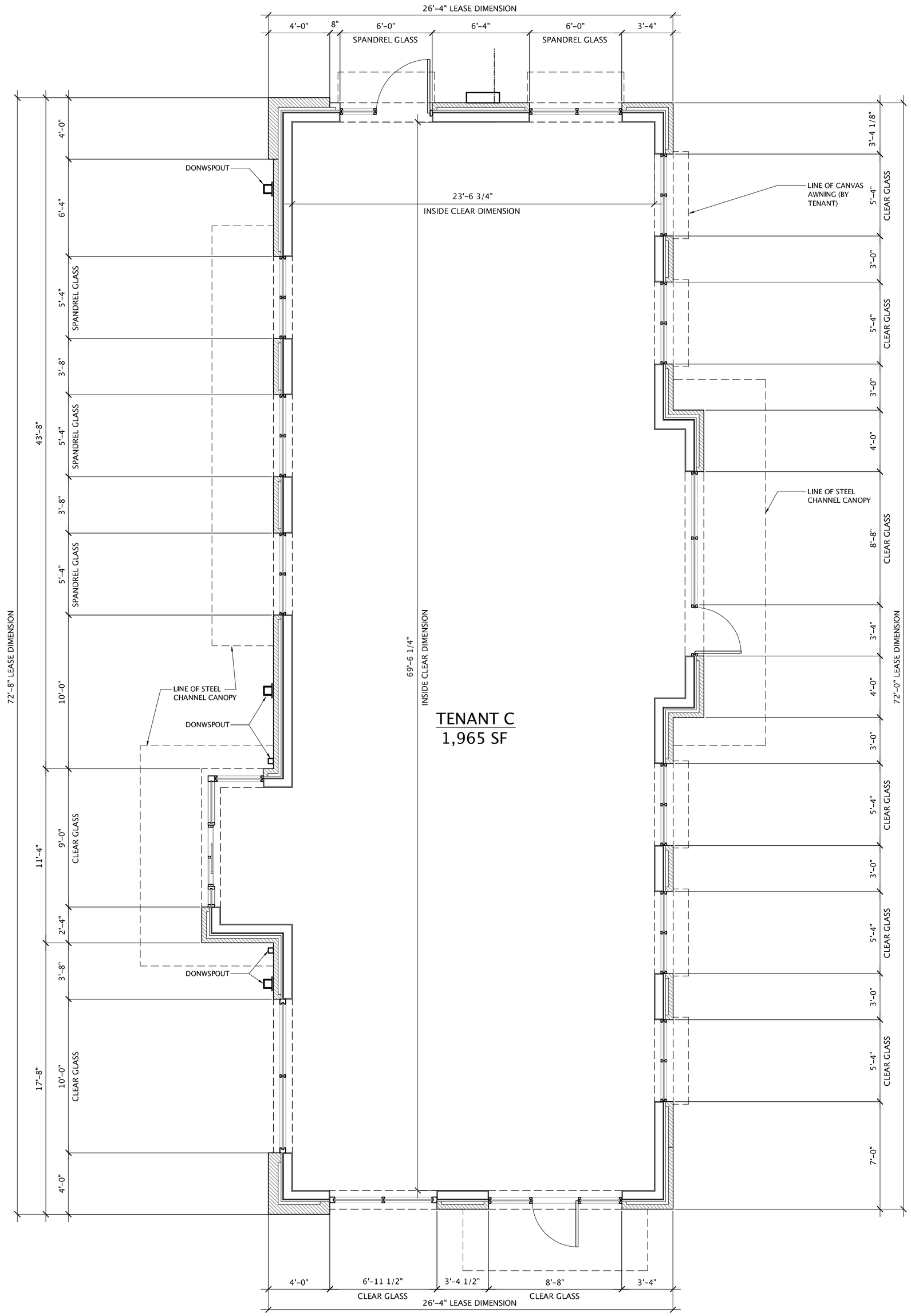

1 LEASE PLAN - BUILDING 'C'

Scale: 1/4" = 1'-0"

OCCUPANT LOAD & EGRESS REQUIREMENTS

THIS SUBMITTAL IS INTENDED FOR BUILDING SHELL ONLY. AS PLANS FOR INDIVIDUAL TENANT SPACES ARE DEVELOPED, ADDITIONAL DOORS SHALL BE LOCATED AS NECESSARY TO CONFORM WITH THE EXIT REQUIREMENTS OF CHAPTER 10.

NORR

CONSULTANT:

Giffels-Webster Engineers, Inc.

ENGINEERS · LAND SURVEYORS
PLANNERS · LANDSCAPE ARCHITECTS
4871 BOND STREET
ROCHESTER HILLS, MI 48309
PHONE (248) 852-3100
FAX (248) 852-6372

SEAL:

THIS DRAWING SHALL NOT BE USED FOR CONSTRUCTION PURPOSES UNTIL THE SEAL AND SIGNATURE OF THE RESPONSIBLE REGISTRANT APPEARS ON THE DRAWING, AND PROPER PERMIT FORMS AND RELATED FEES ARE TRANSMITTED BY THE OWNER, OWNER'S AGENT OR CONTRACTOR TO THE AUTHORITY HAVING JURISDICTION.

DATE	ISSUED FOR	REV
11/08/2012	OWNER REVIEW	
12/14/2012	SITE PLAN SUBMITTAL	
04/25/2012	RE-SUBMITTAL SITE PLAN	
06/21/2013	RE-SUBMITTAL SITE PLAN	
08/20/2013	TENANT COORDINATION	
03/14/2014	RE-SUBMIT ENGINEERING PLANS	
06/26/2014	PHASE II SITE SUBMITTAL	
09/02/2014	PHASE II SITE RE-SUBMITTAL	

Project Manager A.RICCIUTI	**Drawn** B.COLBURN
Project Leader B.COLBURN	**Checked**
Date 06/26/2014	**Dept Mgr Approval**

Client

VERSA DEVELOPMENT
25900 W. 11 Mile Road
Southfield, MI - Sutie 250 48034
Office: (248) 996-1412

Contact: Steve Robinson

Project

PITTSFIELD DEVELOPMENT
Ann Arbor-Saline Road
Pittsfield Township, Michigan

Drawing Title

BUILDING 'C'
LEASE PLAN

DO NOT SCALE DRAWING

Project No.	Drawing No.
JCDT.12.0314	24

1 EAST ELEVATION - BUILDING C (PARKING LOT)

Scale: 1/8" = 1'-0"

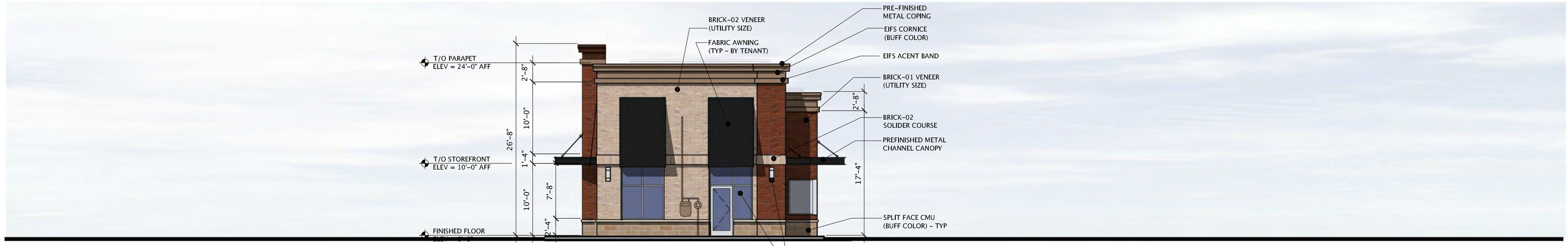

2 NORTH ELEVATION - BUILDING C

Scale: 1/8" = 1'-0"

3 WEST ELEVATION - BUILDING C (ANN ARBOR-SALINE)

Scale: 1/8" = 1'-0"

4 SOUTH ELEVATION - BUILDING C

Scale: 1/8" = 1'-0"

NORR

CONSULTANT:

GWE
Giffels-Webster Engineers, Inc.
ENGINEERS · LAND SURVEYORS
PLANNERS · LANDSCAPE ARCHITECTS
2871 BOND STREET
ROCHESTER HILLS, MI 48309
PHONE (248) 852-3100
FAX (248) 852-6372

SEAL:

THIS DRAWING SHALL NOT BE USED FOR CONSTRUCTION PURPOSES UNTIL THE SEAL AND SIGNATURE OF THE RESPONSIBLE REGISTRANT APPEARS ON THE DRAWING, AND PROPER PERMIT FORMS AND RELATED FEES ARE TRANSMITTED BY THE OWNER, OWNER'S AGENT OR CONTRACTOR TO THE AUTHORITY HAVING JURISDICTION.

DATE	ISSUED FOR	REV
11/08/2012	OWNER REVIEW	
12/14/2012	SITE PLAN SUBMITTAL	
04/25/2012	RE-SUBMITTAL SITE PLAN	
06/21/2013	RE-SUBMITTAL SITE PLAN	
08/20/2013	TENANT COORDINATION	
03/14/2014	RE-SUBMIT ENGINEERING PLANS	
06/26/2014	PHASE II SITE SUBMITTAL	
09/02/2014	PHASE II SITE RE-SUBMITTAL	

Project Manager A.RICCIUTI	**Drawn** B.COLBURN
Project Leader B.COLBURN	**Checked**
Date 06/26/2014	**Dept Mgr Approval**

Client

VERSA DEVELOPMENT
25900 W. 11 Mile Road
Southfield, MI - Sutie 250 48034
Office: (248) 996-1412

Contact: Steve Robinson

Project

PITTSFIELD DEVELOPMENT
Ann Arbor-Saline Road
Pittsfield Township, Michigan

Drawing Title

EXTERIOR ELEVATIONS
BUILDING 'C'

DO NOT SCALE DRAWING

Project No.	**Drawing No.**
JCDT.12.0314	**24**

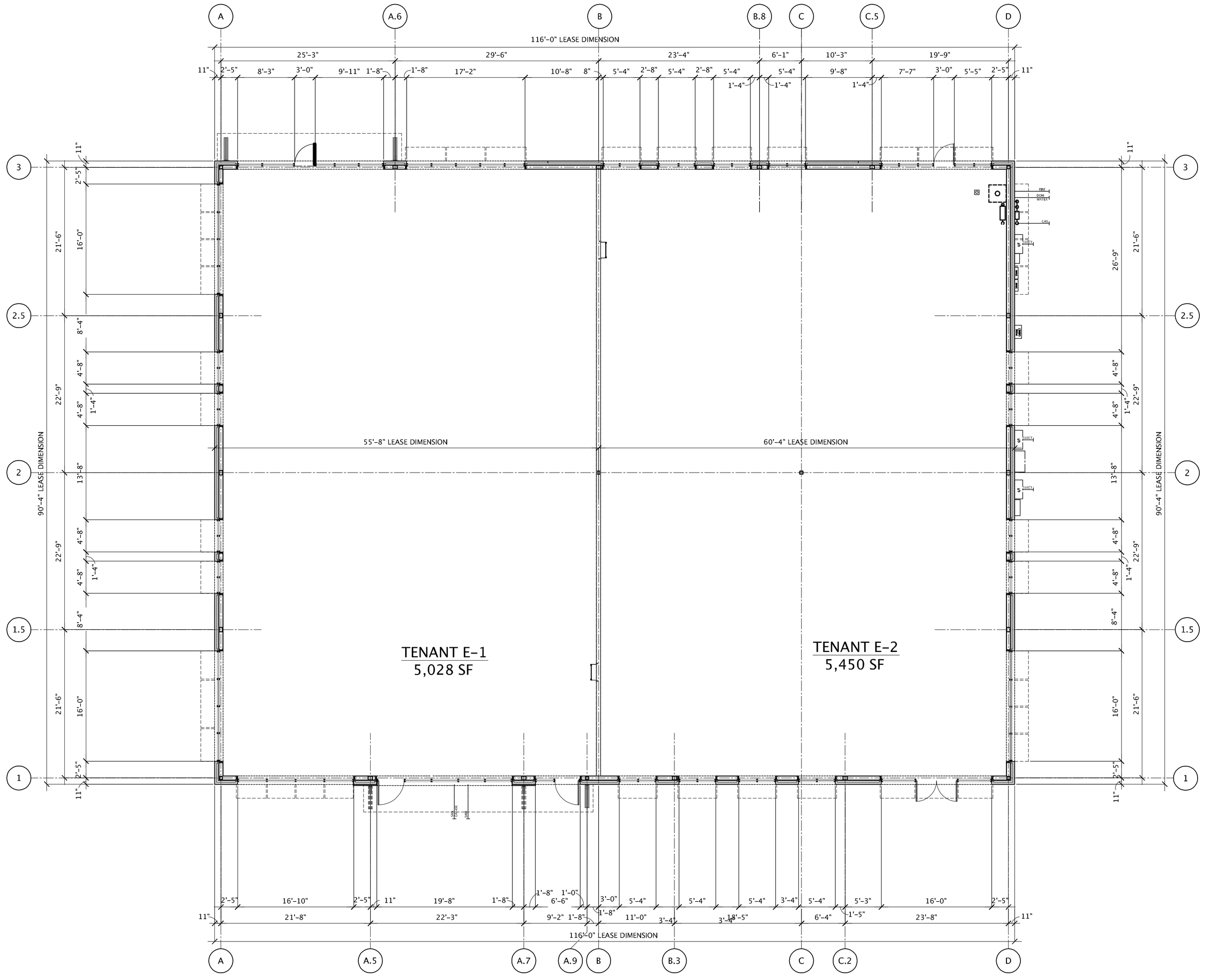

1 LEASE PLAN - BUILDING 'E'

Scale: 1/8" = 1'-0"

NORR

CONSULTANT:

Giffels-Webster Engineers, Inc.

ENGINEERS · LAND SURVEYORS
PLANNERS · LANDSCAPE ARCHITECTS
2871 BOND STREET
ROCHESTER HILLS, MI 48309
PHONE (248) 852-3100
FAX (248) 852-6372

SEAL:

THIS DRAWING SHALL NOT BE USED FOR CONSTRUCTION PURPOSES UNTIL THE SEAL AND SIGNATURE OF THE RESPONSIBLE REGISTRANT APPEARS ON THE DRAWING, AND PROPER PERMIT FORMS AND RELATED FEES ARE TRANSMITTED BY THE OWNER, OWNER'S AGENT OR CONTRACTOR TO THE AUTHORITY HAVING JURISDICTION.

DATE	ISSUED FOR	REV
11/08/2012	OWNER REVIEW	
12/14/2012	SITE PLAN SUBMITTAL	
04/25/2012	RE-SUBMITTAL SITE PLAN	
06/21/2013	RE-SUBMITTAL SITE PLAN	
08/20/2013	TENANT COORDINATION	
03/14/2014	RE-SUBMIT ENGINEERING PLANS	
06/26/2014	PHASE II SITE SUBMITTAL	
09/02/2014	PHASE II SITE RE-SUBMITTAL	

Project Manager A.RICCIUTI	**Drawn** B.COLBURN
Project Leader B.COLBURN	**Checked**
Date 06/26/2014	**Dept Mgr Approval**

Client

VERSA DEVELOPMENT
25900 W. 11 Mile Road
Southfield, MI - Sutie 250 48034
Office: (248) 996-1412

Contact: Steve Robinson

Project

PITTSFIELD DEVELOPMENT
Ann Arbor-Saline Road
Pittsfield Township, Michigan

Drawing Title

BUILDING 'E'
LEASE PLAN

DO NOT SCALE DRAWING

Project No.	Drawing No.
JCDT.12.0314	26

1 EAST ELEVATION - BUILDING E (PARKING LOT)

Scale: 1/8" = 1'-0"

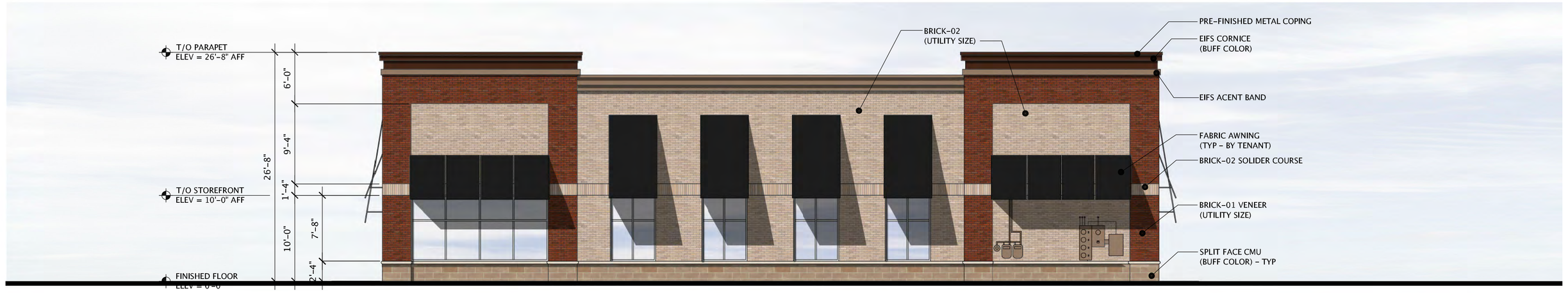

2 NORTH ELEVATION - BUILDING E

Scale: 1/8" = 1'-0"

ROOF MOUNTED EQUIPTMENT NOTE:

ALL ROOF MOUNTED EQUIPTMENT SHALL BE SCREEN BY PARAPET AS REQUIRED

3 SOUTH ELEVATION - BUILDING E (ACCESS DRIVE)

Scale: 1/8" = 1'-0"

4 WEST ELEVATION - BUILDING E

Scale: 1/8" = 1'-0"

NORR

CONSULTANT:

GWE
Giffels-Webster Engineers, Inc.
ENGINEERS · LAND SURVEYORS
PLANNERS · LANDSCAPE ARCHITECTS
2871 BOND STREET
ROCHESTER HILLS, MI 48309
PHONE (248) 852-3100
FAX (248) 852-6372

SEAL:

THIS DRAWING SHALL NOT BE USED FOR CONSTRUCTION PURPOSES UNTIL THE SEAL AND SIGNATURE OF THE RESPONSIBLE REGISTRANT APPEARS ON THE DRAWING, AND PROPER PERMIT FORMS AND RELATED FEES ARE TRANSMITTED BY THE OWNER, OWNER'S AGENT OR CONTRACTOR TO THE AUTHORITY HAVING JURISDICTION.

DATE	ISSUED FOR	REV
11/08/2012	OWNER REVIEW	
12/14/2012	SITE PLAN SUBMITTAL	
04/25/2012	RE-SUBMITTAL SITE PLAN	
06/21/2013	RE-SUBMITTAL SITE PLAN	
08/20/2013	TENANT COORDINATION	
03/14/2014	RE-SUBMIT ENGINEERING PLANS	
06/26/2014	PHASE II SITE SUBMITTAL	
09/02/2014	PHASE II SITE RE-SUBMITTAL	

Project Manager A.RICCIUTI	**Drawn** B.COLBURN
Project Leader B.COLBURN	**Checked**
Date 06/26/2014	**Dept Mgr Approval**

Client

VERSA DEVELOPMENT
25900 W. 11 Mile Road
Southfield, MI - Sutie 250 48034
Office: (248) 996-1412

Contact: Steve Robinson

Project

PITTSFIELD DEVELOPMENT
Ann Arbor-Saline Road
Pittsfield Township, Michigan

Drawing Title

EXTERIOR ELEVATIONS
BUILDING 'E'

DO NOT SCALE DRAWING

Project No.	Drawing No.
JCDT.12.0314	27

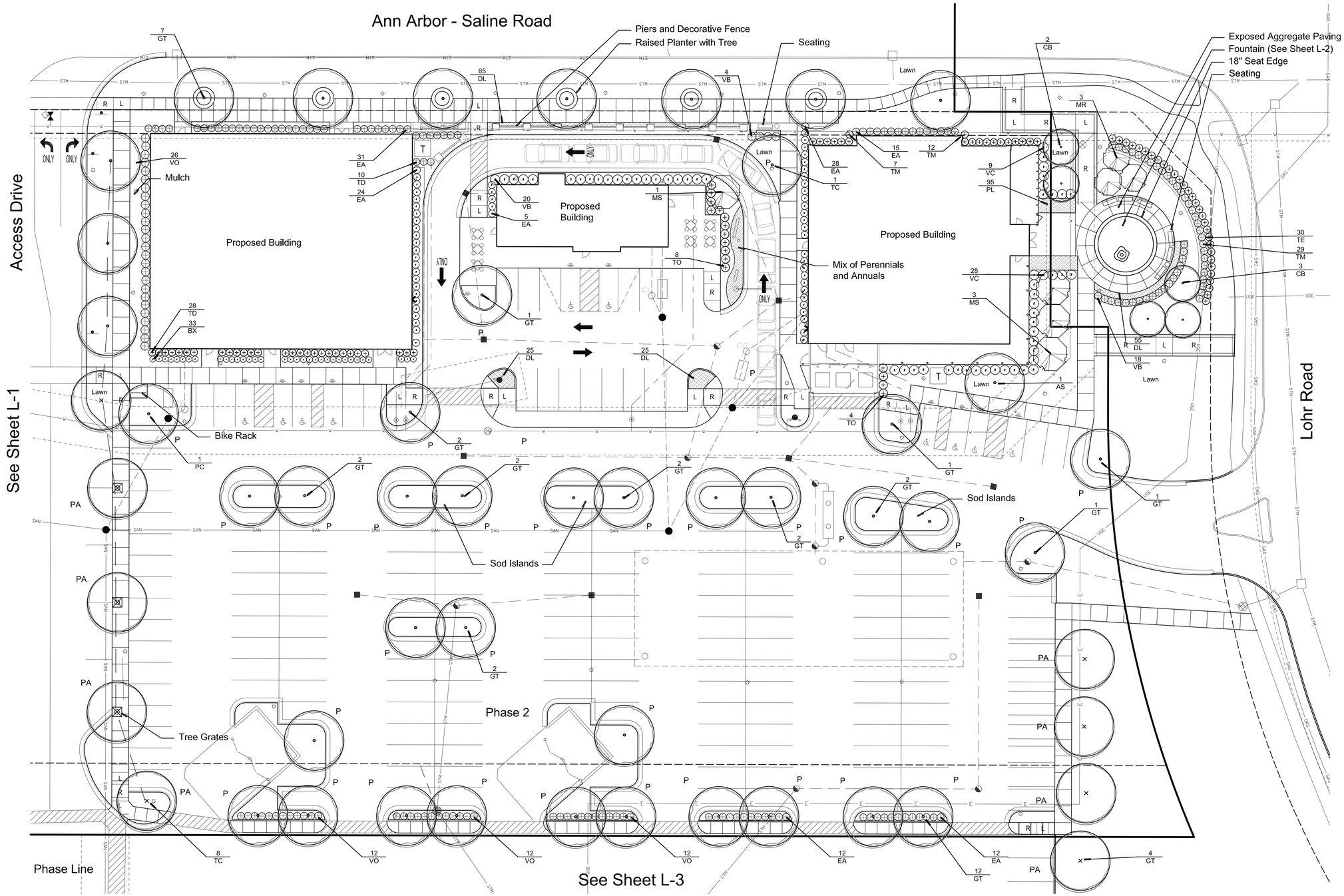

Plant List

sym.	qty.	botanical name	common name	caliper	spacing	root	height
AS	1	Acer saccharum	Sugar Maple	2.5"	as shown	B&B	
BX	33	Buxus microphylla	Boxwood		as shown		24"
CB	5	Carpinus betula	European Hornbeam	2.5"	as shown	B&B	
DL	170	Hemerocallis 'Happy Returns'	Happy Returns Daylily		No. 2 Cont.		
EA	131	Euonymus alta 'Compact'	Compact Burning Bush		as shown		30"
GT	41	Gleditsia triacanthos var. 'Inermis'	Honey Locust	2.5"	as shown	B&B	
MR	3	Malus sargentii	Sargent Crab	2.0"	as shown	B&B	
MS	7	Malus 'Spring Snow'	Spring Snow Crab	2.0"	as shown	B&B	
PC	1	Pyrus calleryana 'Cleveland Select'	Cleveland Select Pear	2.5"	as shown	B&B	
PL	105	Pennisetum a. 'Little Bunnies'	Little Bunnies Dwarf Fountain Grass		No. 2 Cont.		
TC	9	Tilia cordata 'Greenspire'	Greenspire Linden	2.5"	as shown	B&B	
TD	38	Taxus x. m. 'Hicksii'	Hicks Yew		as shown	B&B	36"
TE	30	Taxus x m. 'Everlow'	Everlow Yew		as shown		18"
TM	37	Taxus x. m. 'Densiformis'	Dense Yew		as shown		30"
TO	12	Thuja occidentalis 'Dark Green Heavy'	Dark Green Arborvitae		as shown	B&B	6'
VB	35	Viburnum x. burkwoodii	Burkwood Viburnum		as shown		30"
VC	37	Viburnum carlesii	Korean Spice Viburnum		as shown		30"
VO	52	Viburnum opulus 'Compacta'	European Cranberry Bush		as shown		30"

Notes:
"P" Denotes Required Parking Lot Tree
"PA" Denotes Required Parking Lot Perimeter Trees
See Sheet L-3 for Site Furnishings

Landscape Summary

Interior Parking Lot Landscape
- Parking Lot Area: 146,161 s.f.
- Interior Landscape Required: 14,616 s.f. (146,161 s.f. x 10%)
- Interior Landscape Provided: 12,921 s.f. (8.8%)

Parking Lot Trees
- Spaces Shown: 412 Spaces
- Trees Required: 41 Trees (412 / 10)
- Trees Provided: 70 Trees

Perimeter Trees
- Parking Lot Perimeter: 704'
- Trees Required: 18 Trees (704' / 40)
- Trees Provided: 18 Trees

Street Trees
Oak Valley
- Street Frontage: 252'
- Trees Required: 8 Trees (1 per 30')
- Trees Provided: 8 Trees

Ann Arbor Saline Road
- Street Frontage: 840'
- Trees Required: 28 Trees (1 per 30')
- Trees Provided: 29 Trees

19 Trees of the Required Parking Lot Trees are Located in the Meijer Parking Lot

© 2014 Allen Design L.L.C.

ALLEN DESIGN
LAND PLANNING / LANDSCAPE ARCHITECTURE
557 CARPENTER • NORTHVILLE, MI 48167
248 467 4668 • Fax 248 349 0559
Email: jca@wideopenwest.com

Versa | real estate

Seal:

STATE OF MICHIGAN
JAMES C. ALLEN
Landscape Architect
REGISTERED LANDSCAPE ARCHITECT

Title:
Landscape Plan

Project:
Pittsfield Commercial
Pittsfield Township, Michigan

Prepared for:
Versa Development
25900 West 11 Mile, Suite 250
Southfield, Michigan 48034

Revision:	Issued:
Submission	December 14, 2012
Resubmit Site Plan	April 23, 2013
Revised	June 21, 2013
Revised	August 15, 2015
Revised	September 26, 2013
Revised	October 17, 2013
Revised	November 22, 2013
Revised	January 30, 2014
Revised	March 17, 2014
Revised	June 27, 2014
Revised	July 25, 2014
Revised	September 3, 2013

Job Number:
12-028

Drawn By:	Checked By:
JCA	jca

0' 5' 10' 20'

NORTH
1"=20'

Sheet No.
28-L-1

Bench

Kennsington Bench by Conceptual Site
Powdercoat Finish - Silver

Litter

Urbane Litter by Conceptual Site
Powdercoat Finish - Silver

Raised Planter

Wall and Cap - Country Manor by Keystone
16" Height

Pier with Urn

Country Manor by Keystone
Urn to be Determined

Bike Rack

M Bike Rack by Conceptual Site
Powdercoat Finish - Silver

Fountain Spray Pattern

Fountain Cross Section

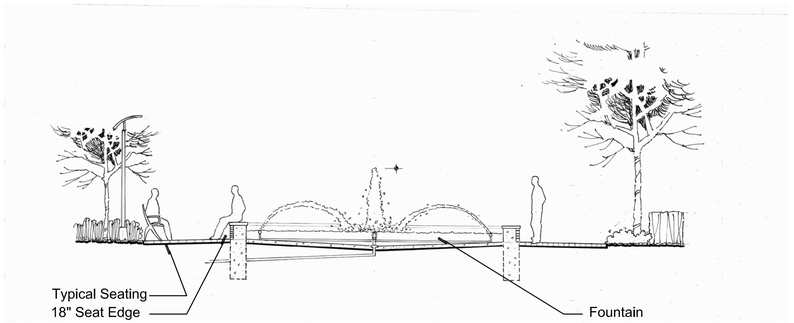

Maintenance Statement

The owner of the property shall be responsible for all maintenance of site landscaping, as follows:

Continuing Care
Landscaping shall be kept in a neat, orderly and healthy growing condition, free from debris and refuse. All landscape materials shall be maintained by a regular program or mowing, watering, weeding, feeding and pruning. Pruning shall be minimal at the time of installation, only to remove dead or diseased branches. Subsequent pruning shall assure proper maturation of plants to achieve their approved purpose.

Replenishment
All dead or diseased plant material shall be removed and replaced within six (6) months after it dies or in the next planting season, whichever occurs first. For purposes of this the planting season for deciduous plants shall be between March 1 and June 1 and from October 1 until the prepared soil becomes frozen. The planting season for evergreen plants shall be between March 1 and June 1. Plant material installed to replace dead or diseased material shall be as close as practical to the size of the material it is intended to replace.

Watering
The developer, at the time of submission of the final site plan shall demonstrate that adequate provisions have been made to supply water to all landscape areas. This shall be accomplished by installation of an underground irrigation system to provide water for the landscape areas specified on the landscape plan.

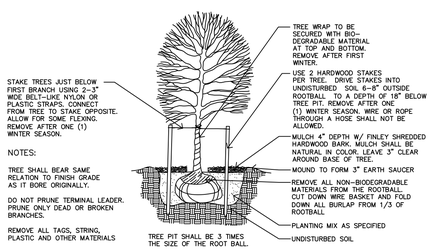

DECIDUOUS TREE PLANTING DETAIL
NTS

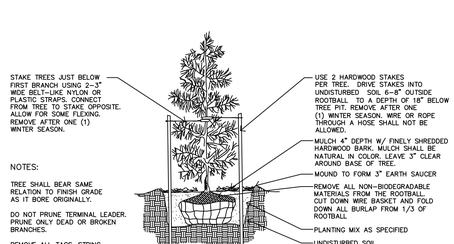

EVERGREEN TREE PLANTING DETAIL
NTS

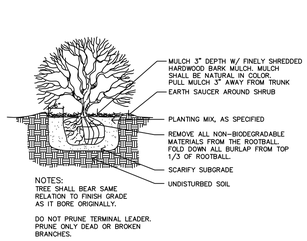

SHRUB PLANTING DETAIL
NTS

LANDSCAPE REQUIREMENTS

1. The work shall consist of providing all necessary materials, labor, warrants, equipment, tools and supervision required for the completion as shown on the drawings.
2. The plant materials shall conform to type stated on the plant list. Sizes shall be the minimum stated on the plant list or larger. All measurements shall be in accordance with the latest edition of the "A.A.N. Standards for nursery stock."
3. The plant material shall be nursery grown and inspected by the owner's representative before planting. The owner's representative reserves the right to reject any plant material at any time.
4. Plants designated "B & B" shall be balled and burlapped with firm balls of earth.
5. The contractor is responsible for planting the materials at the correct grades and spacing. The plants shall be oriented as to give the best appearance.
6. When the plant has been properly set, the pit shall be backfilled with a topsoil mixture, gradually filling, patting and settling with water.
7. All plant materials shall be pruned and injuries repaired. The amount of pruning shall be limited to the removal of dead or injured twigs and to compensate for the loss of roots from transplanting. Cuts should be flush, leaving no stubs. Cuts over 1" shall be painted with tree paint.
8. The contractor agrees to guarantee all plant materials for the period of two years. At that time the owner's representative reserves the right for a final inspection. Plant material with 25% die back, as determined by the owner's representative shall be replaced. This guarantee includes the furnishing of new plants, labor and materials. These new plants shall also be guaranteed for the period of one year.
9. Topsoil shall be friable, fertile topsoil of clay loam character containing at least 5% but not more than 20% by weight of organic matter with a PH range from 6.0 to 7.0. Soil shall be free from clay lumps, coarse sand, plant roots, sticks and other foreign materials, foreign materials.
10. Seed mix shall consist of the following types and proportions:
    Kentucky Blue Grass - "Baron/Cheriadelphi" 60%
    Chewing Chewing Fescue 15%
    Creeping Reed Fescue 15%
    Perennial Rye Grass 10%
    Weed content shall not exceed 1%.
    The mix shall be applied at a rate of 200 lbs./acre
11. Sod shall be two year old "Baron/Cheriadelphi" Kentucky Blue Grass grown in a sod nursery on loam soil.
12. The Contractor shall verify all rights of way, easements, property lines and limits of work, etc, prior to commencing work.
13. The Contractor shall be responsible for contacting and coordinating with all pertinent utility companies 72 hours in advance of any digging to make himself familiar with all underground utilities, pipes and structures. The Contractor shall take sole responsibility for any cost incurred due to damage of said utilities.
14. The Contractor shall not willfully proceed with construction as designed when it is obvious that unknown obstructions and/or grade differences exist. Such conditions shall be immediately brought to the attention of the owner's representative and/or Landscape Architect. The Contractor shall assume full responsibility for all necessary revisions due to failure to give such notification.
15. Any discrepancies between dimensioned layout and actual field conditions shall be reported to the Owner's representative and Landscape Architect. Failure to make such discrepancies known will result in Contractor's responsibility and liability for any changes and associated cost.
16. The Contractor to verify percolation of all planting pits prior to installation of plant material.

Additional Notes:
1. All Landscaped Areas Shall be Irrigated with an Automatic, Underground System.
2. Planting Shall Occur Between March 1 - May 15 and October 15 - December 15

© 2014 Allen Design L.L.C.

ALLEN DESIGN
LAND PLANNING / LANDSCAPE ARCHITECTURE
557 CARPENTER • NORTHVILLE, MI 48167
248 467 4668 • Fax 248 349 0559
Email: jca@wideopenwest.com

Versa | real estate

Seal:

STATE OF MICHIGAN
JAMES C. ALLEN
Landscape Architect
No. 1301 GB
REGISTERED LANDSCAPE ARCHITECT

Title:
Landscape Details

Project:
Pittsfield Commercial
Pittsfield Township, Michigan

Prepared for:
Versa Development
25900 West 11 Mile, Suite 250
Southfield, Michigan 48034

Revision:	Issued:
Submission	December 14, 2012
Resubmit Site Plan	April 23, 2013
Revised	June 21, 2013
Revised	August 15, 2013
Revised	September 26, 2013
Revised	October 17, 2013
Revised	November 22, 2013
Revised	January 30, 2014
Revised	March 17, 2014
Revised	June 27, 2014
Revised	July 25, 2014
Revised	September 3, 2013

Job Number:
12-028

Drawn By:	Checked By:
jca	jca

0' 25' 50'
NORTH
1"=50'

Sheet No.
29-L-2

FRONT ELEVATION (SOUTHEAST)

RIGHT ELEVATION (NORTHEAST)

REAR ELEVATION (NORTHWEST)

LEFT ELEVATION (SOUTHWEST)

EXTERIOR FINISH SCHEDULE

BUILDING ITEMS	DESCRIPTION
WOOD SIDING, TRIM, & WOOD SHUTTERS	PRE-STAINED CEDAR HENRY POOR LUMBER 3200 REAGAN DRIVE LAFAYETTE, IN 47906 CONTACT: DOUG MILLER PHONE: 800-255-7913 CEDARTONE TWP #1501 STAIN FORMULA
FRONT ENTRANCE DOORS	METAL DOORS (FAUX WOOD) CECO DOOR "MADERA" (CS-5) PHONE: 270.441.7171
TRIM	SHERWIN WILLIAMS PAINTS 2 COATS GREEN ENAMEL OIL OR ACRYLIC BASE. (R2 MAROON 1/32, N1 RAW UMBER 16/32, W1 WHITE 22/32, B1 BLACK 44/32, Y3 DEEP GOLD 2 OZ & 5/32, G2 NEW GREEN 4 OZ & 54/32). (DTM UD SEMI)
METAL FLASHING AND GUTTERS	SHERWIN WILLIAMS PAINTS 2 COATS GREEN ENAMEL OIL OR ACRYLIC BASE. (R2 MAROON 1/32, N1 RAW UMBER 16/32, W1 WITE 22/32, B1 BLACK 44/32, Y3 DEEP GOLD 2 OZ & 5/32, G2 NEW GREEN 4 OZ & 54/32). (DTM UD SEMI)

BUILDING ITEMS	DESCRIPTION
ENTRY DOOR FRAME, & DOWNSPOUTS	SHERWIN WILLIAMS #2195 ROADSIDE, ACRYLIC OR ENAMEL, GLOSS BASE (DTM) FINISH COLOR TO MATCH PRE-STAINED CEDAR - PRIMER/TWO FINISH COATS
METAL DOORS AND FRAMES	SHERWIN WILLIAMS ENAMEL GLOSS BLACK - PRIMER/TWO FINISH COATS
BRICK VENEER	GENERAL SHALE BRICK COMPANY "PHOENIX" #143 OVERSIZE SANFORD, NORTH CAROLINA 800-277-2700
STONE WAINSCOT	HERITAGE STONE "OTTAWA DRYSTACK" 740-450-4236
SPLIT FACE CMU & DOWNSPOUTS	PAINT TO MATCH BRICK VENEER
METAL ROOF	GALVALUME 5 RIBBED V GROOVED COLOR: GALVALUME METAL SALES 800-747-1206
DUMPSTER GATES & BOLLARDS	SHERWIN WILLIAMS ENAMEL GLOSS BLACK - PRIMER/TWO FINISH COATS

DISCLAIMER NOTE:
THE COLORS DEPICTED ON THESE ELEVATIONS ARE FOR GRAPHIC REPRESENTATION PURPOSES ONLY. PLEASE REFER TO MATERIAL BOARD FOR ACTUAL SAMPLE OF COLORS AND TEXTURES

GreenbergFarrow
21 S. Evergreen Ave. Suite 200
Arlington Heights, Illinois 60005
t: 847 788 9200 f: 847 788 9536

TEXAS ROADHOUSE
ANN ARBOR,MI
7163 SF
20140360.0

EXTERIOR ELEVATIONS

SCALE: 1/8" = 1'-0"

A2.0

09/23/14

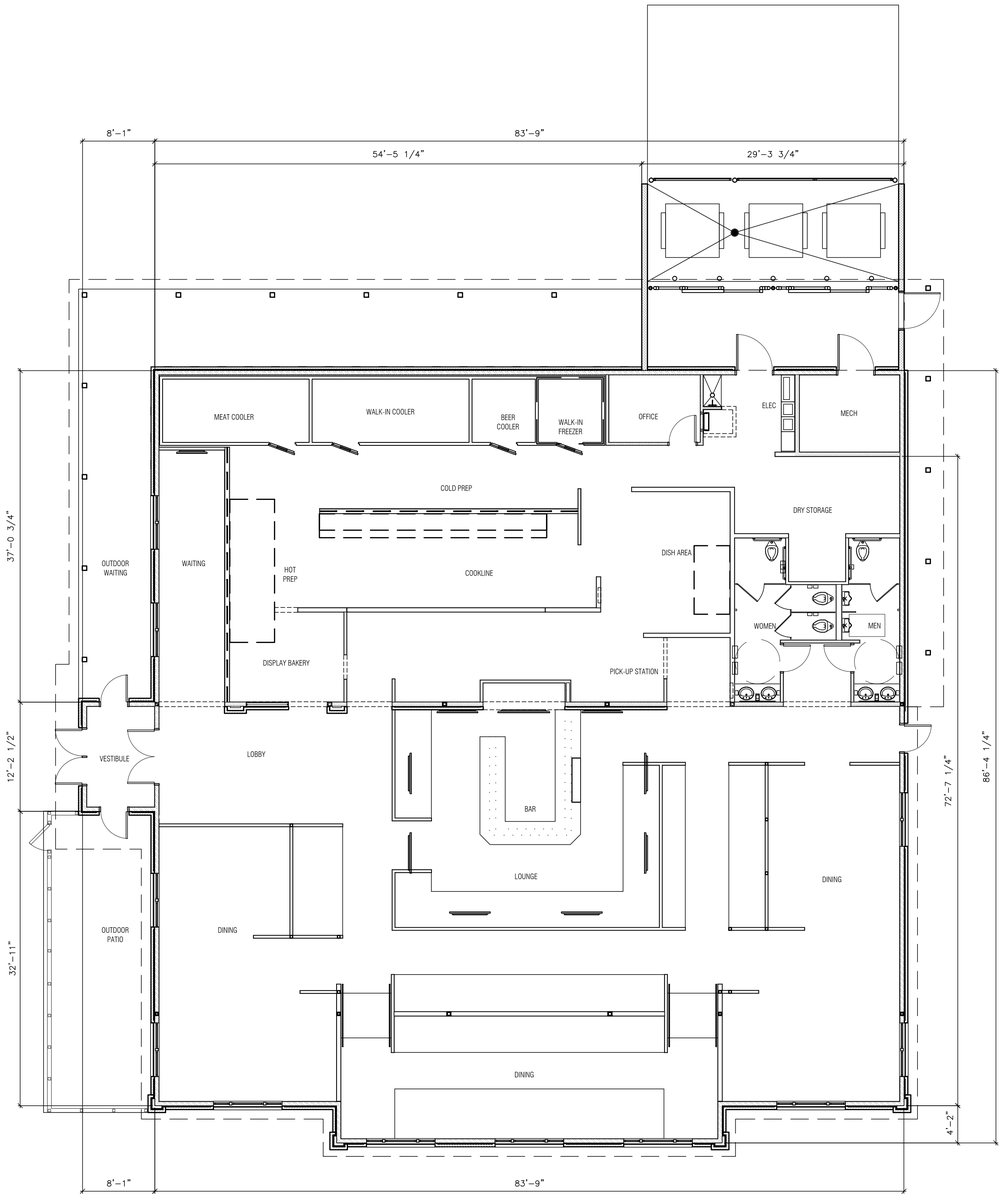

FLOOR PLAN

GreenbergFarrow
21 S. Evergreen Ave. Suite 200
Arlington Heights, Illinois 60005
t: 847 788 9200 f: 847 788 9536

TEXAS ROADHOUSE
ANN ARBOR,MI
7163 SF
20140360.0

FLOOR PLAN EXHIBIT
SCALE: 1/8" = 1'-0"

A1.0 SHEET 33

06/19/14

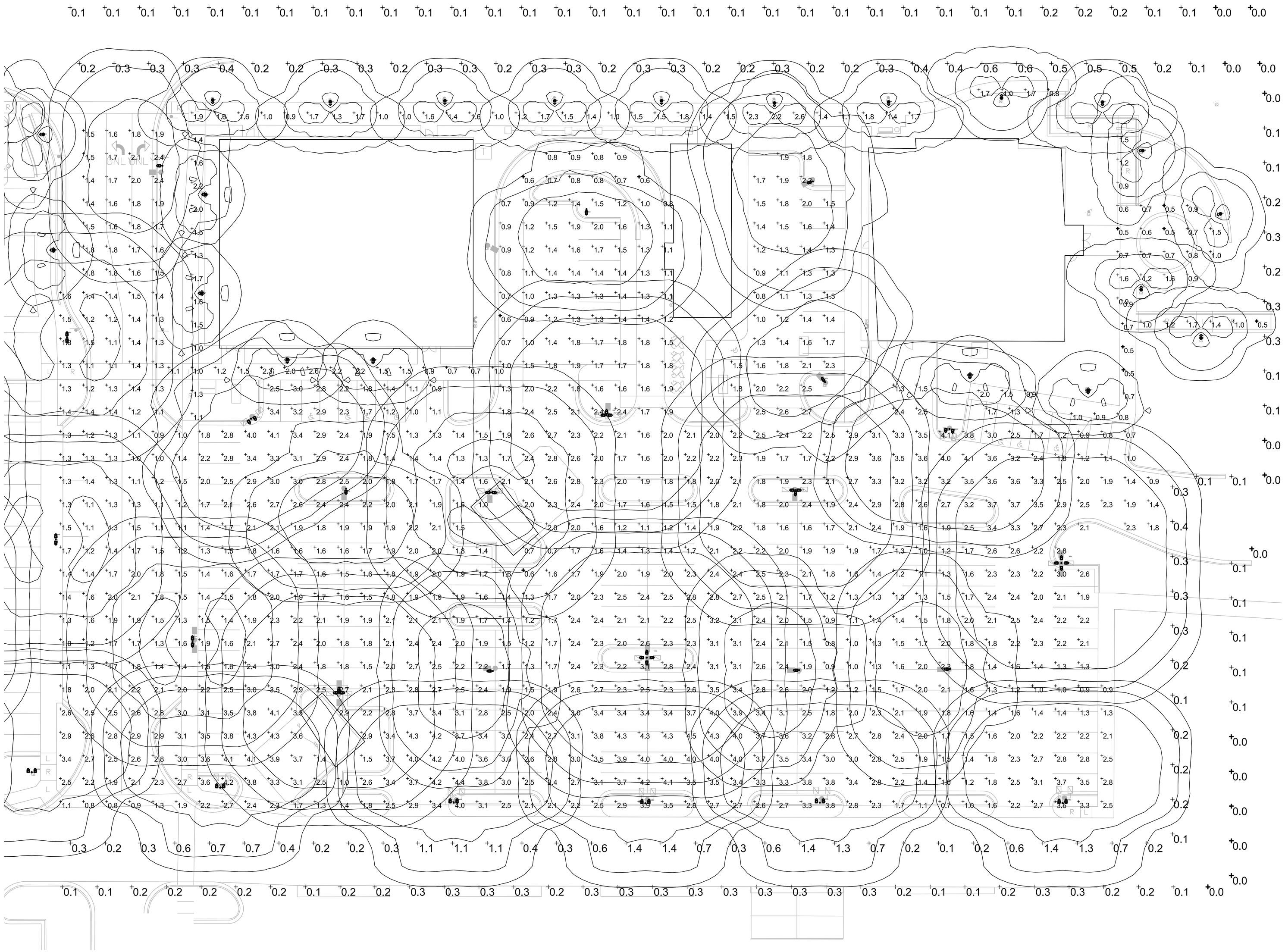

1 PROPOSED PHOTOMETRIC PLAN
Scale: 1" = 20'-0"

NORTH

NORR

CONSULTANT:

GWE
Giffels-Webster Engineers, Inc.
ENGINEERS · LAND SURVEYORS
PLANNERS · LANDSCAPE ARCHITECTS
2871 BOND STREET
ROCHESTER HILLS, MI 48309
PHONE (248) 852-3100
FAX (248) 852-6372

SEAL:

THIS DRAWING SHALL NOT BE USED FOR CONSTRUCTION PURPOSES UNTIL THE SEAL AND SIGNATURE OF THE RESPONSIBLE REGISTRANT APPEARS ON THE DRAWING, AND PROPER PERMIT FORMS AND RELATED FEES ARE TRANSMITTED BY THE OWNER, OWNER'S AGENT OR CONTRACTOR TO THE AUTHORITY HAVING JURISDICTION.

DATE	ISSUED FOR	REV
11/08/2012	OWNER REVIEW	
12/14/2012	SITE PLAN SUBMITTAL	
04/25/2012	RE-SUBMITTAL SITE PLAN	
06/21/2013	RE-SUBMITTAL SITE PLAN	
08/20/2013	TENANT COORDINATION	
03/14/2014	RE-SUBMIT ENGINEERING PLANS	
06/26/2014	PHASE II SITE SUBMITTAL	
09/02/2014	PHASE II SITE RE-SUBMITTAL	

Project Manager A.RICCIUTI	**Drawn** M. GOOD
Project Leader B.COLBURN	**Checked** S. TOWNSEND
Date 06/26/2014	**Dept Mgr Approval** A.RICCIUTI

Client

VERSA DEVELOPMENT
25900 W. 11 Mile Road
Southfield, MI - Sutie 250 48034
Office: (248) 996-1412

Contact: Steve Robinson

Project

PITTSFIELD DEVELOPMENT
Ann Arbor-Saline Road
Pittsfield Township, Michigan

Drawing Title

PHASE II
PHOTOMETRIC PLAN

DO NOT SCALE DRAWING

Project No.	Drawing No.
JCDT.12.0314	34

LITHONIA LIGHTING

Catalog Number | Notes | Type

FEATURES & SPECIFICATIONS

INTENDED USE — Square straight steel pole for up to 39-foot mounting height.

CONSTRUCTION — Weldable-grade, hot-rolled, commercial-quality carbon steel tubing with a minimum yield of 55,000 psi (11-gauge), or 50,000 psi (7-gauge). Uniform wall thickness of .1196" or .1793". Shaft is one-piece with a full-length longitudinal high-frequency electric resistance weld. Uniformly square in cross-section with flat sides, small corner radii and excellent torsional qualities. Available shaft widths are 4, 5 and 6 inches.

Anchor base is fabricated from hot-rolled carbon steel plate conforming to ASTM A36, that meets or exceeds a minimum yield strength of 36,000 psi. Base plate and shaft are circumferentially welded top and bottom. Base cover is finished to match pole.

A handhole having nominal dimensions of 3" x 5" for all shafts. Included is a cover with attachment screws.

Top cap provided with all drill-mount and open top "PT" poles.

Fasteners are high-strength galvanized, zinc-plated or stainless steel.

Finish: Must specify finish.

Grounding: Provision located immediately inside handhole rim. Grounding hardware is not included (provided by others).

Anchor bolts: Top portion of anchor bolt is galvanized per ASTM A-153. Made of steel rod having a minimum yield strength of 55,000 psi.

Note: Specifications subject to change without notice.

Actual performance may differ as a result of end-user environment and application.

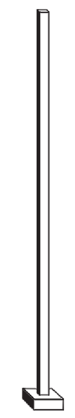

Anchor Base Poles

SSS

SQUARE STRAIGHT STEEL

ORDERING INFORMATION Lead times will vary depending on options selected. Consult with your sales representative. **Example:** SSS 20 5C DM19 DDB

SSS

Series	Nominal fixture mounting height	Nominal shaft base size/wall thickness	Mounting[1]	Options	Finish[9]
SSS	10 – 39 feet (See back page.)	(See back page.)	Tenon mounting: PT Open top (includes top cap); T20 2-3/8" O.D. (2" NPS); T25 2-7/8" O.D. (2-1/2" NPS); T30 3-1/2" O.D. (3" NPS); T35 4" O.D. (3-1/2" NPS). Drill mounting[2]: DM19 1 at 90°; DM28 2 at 180°; DM28 PL 2 at 180° with one side plugged; DM29 2 at 90°; DM39 3 at 90°; DM49 4 at 90°. CSX/DSX/AERIS™/OMERO™ Drill mounting[3]: DM19AS 1 at 90°; DM28AS 2 at 180°; DM29AS 2 at 90°; DM39AS 3 at 90°; DM49AS 4 at 90°. AERIS™ Suspend drill mounting[2,3]: DM19AST_ 1 at 90°; DM28AST_ 2 at 180°; DM29AST_ 2 at 90°; DM39AST_ 3 at 90°; DM49AST_ 4 at 90°. OMERO™ Suspend drill mounting[2,3]: DM19MRT_ 1 at 90°; DM28MRT_ 2 at 180°; DM29MRT_ 2 at 90°; DM39MRT_ 3 at 90°; DM49MRT_ 4 at 90°	Shipped installed: L/AB Less anchor bolts; VD Vibration damper; TP Tamper proof; H1-18Sxx Horizontal arm bracket (1 fixture)[4,5]; FDLxx Festoon outlet less electrical[6]; CPL12xx 1/2" coupling[6]; CPL34xx 3/4" coupling[6]; CPL1xx 1" coupling[6]; NPL12xx 1/2" threaded nipple[6]; NPL34xx 3/4" threaded nipple[6]; NPL1xx 1" threaded nipple[6]; EHHxx Extra handhole[4,6]; MAEX Match existing[7]; USPOM United States point of manufacture[8]; IC Interior coating[9]	Standard colors: DDB Dark bronze; DWH White; DBL Black; DMB Medium bronze; DNA Natural aluminum. Classic colors: DSS Sandstone; DGC Charcoal gray; DTG Tennis green; DBR Bright red; DSB Steel blue. Architectural colors (powder finish)[10]

NOTES:
1. PT open top poles include top cap. When ordering tenon mounting and drill mounting for the same pole, follow this example: DM28/T20. The combination includes a required extra handhole.
2. The drilling template to be used for a particular luminaire depends on the luminaire that is used. Refer to the Technical Data Section of the Outdoor Binder for Drilling Templates.
3. Insert "1" or "2" to designate fixture size: e.g. DM19AST2.
4. Specify location and orientation when ordering option. For 1st "x": Specify the height in feet above base of pole. Example: 5ft = 5 and 20ft = 20. For 2nd "x": Specify orientation from handhole (A,B,C,D). Refer to the Handhole Orientation diagram above.
5. Horizontal arm is 18" x 2-3/8" O.D. tenon standard.
6. Combination of tenon-top and drill mount includes extra handhole.
7. Must add original order number.
8. Use when mill certifications are required.
9. Provides enhanced corrosion resistance.
10. Additional colors available; see www.lithonia.com/archcolors or Architectural Colors brochure (Form No. 794.3). Powder finish standard.

HANDHOLE ORIENTATION

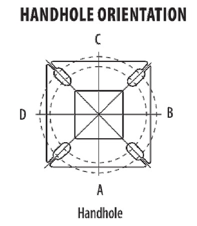

IMPORTANT INSTALLATION NOTES:
- **Do not** erect poles without having fixtures installed.
- Factory-supplied templates must be used when setting anchor bolts. Lithonia Lighting will not accept claim for incorrect anchorage placement due to failure to use Lithonia Lighting factory templates.
- If poles are stored outside, all protective wrapping must be removed immediately upon delivery to prevent finish damage.
- Lithonia Lighting is not responsible for the foundation design.

KAD LED
LED Area Luminaire

Catalog Number | Notes | Type

Hit the Tab key or mouse over the page to see all interactive elements.

Introduction

The Contour® Series luminaires offer traditional square dayforms with softened edges for a versatile look that complements many applications.

The KAD LED combines the latest in LED technology with the familiar aesthetic of the Contour® Series for stylish, high-performance illumination that lasts. It is ideal for replacing 100-250W metal halide in area lighting applications with typical energy savings of 65% and expected service life of over 100,000 hours.

Specifications

EPA: 1.2 ft² (0.11 m²)
Length: 17-1/2" (44.5 cm)
Width: 17-1/2" (44.5 cm)
Height: 7-1/8" (18.1 cm)
Weight (max): 36 lbs (16.4 kg)

Ordering Information

EXAMPLE: KAD LED 1 63B350/40K SR5 MVOLT SPD04 DDBXD

KAD LED

Series	Light Engines	Performance Package[1]	Distribution	Voltage	Mounting	Options	Finish (required)
KAD LED	1 One engine (49 or 63 LEDs)	350 mA options: 49B350/30K 3000K; 49B350/40K 4000K; 49B350/50K 5000K; 63B350/30K 3000K; 63B350/40K 4000K; 63B350/50K 5000K. 530 mA options: 63B530/30K 3000K; 63B530/40K 4000K; 63B530/50K 5000K	SR2 Type II; SR3 Type III; SR4 Type IV; SR5 Type V	MVOLT[2]; 120[2]; 208[2]; 240[2]; 277[2]; 347; 480	Shipped included. Type: SPD__ Square pole; RPD__ Round pole; WBD__ Wall bracket; WWD__ Wood pole or wall. Length: 04 4" arm; 06 6" arm; 09 9" arm; 12 12" arm	Shipped installed: PER NEMA twist-lock receptacle only (no controls); SF Single fuse (120, 277, 347V)[3]; DF Double fuse (208, 240, 480V)[3]; DMG 0-10V dimming driver (no controls)[4]; DFL Diffusing lens; BL30 Switched dimming, 30%[5]; BL50 Switched dimming, 50%[5]. Shipped separately: VG Vandal guard[6]; WG Wire guard[6]	DDBXD Dark bronze; DBLXD Black; DNAXD Natural aluminum; DWHXD White; DDBTXD Textured dark bronze; DBLBXD Textured black; DNATXD Textured natural aluminum; DWHGXD Textured white

Drilling

Template #5 Top of Pole

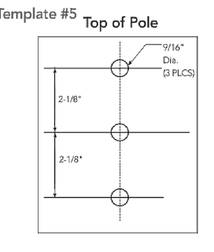

Accessories
Ordered and shipped separately.

DLL127F 1.5 JU	Photocell - SSL twist-lock (120-277V)[7]
DLL347F 1.5 CUL JU	Photocell - SSL twist-lock (347V)[7]
DLL480F 1.5 CUL JU	Photocell - SSL twist-lock (480V)[7]
SC U	Shorting cap[7]
KMA DDBXD U	Mast arm adapter (specify finish)
KADWG U	Wire guard accessory
KADVG U	Vandal guard accessory

For more control options, visit DTL and ROAM online.

Tenon Mounting Slipfitter *

Tenon O.D.	Single Unit	2 at 180°	2 at 90° †	3 at 120°	3 at 90° †	4 at 90° †
2-3/8"	T20-190	T20-280	T20-290	T20-320 †	T20-390	T20-490
2-7/8"	T25-190	T25-280	T25-290	T25-320	T25-390	T25-490
4"	T35-190	T35-280	T35-290	T35-320	T35-390	T35-490

* For round pole mounting (RPA) only. † Requires 9" or 12" arm.

NOTES
1. Configured with 4000K (/40K) provides the shortest lead times. Consult factory for 3000K (/30K) and 5000K (/50K) lead times.
2. MVOLT driver operates on any line voltage from 120-277V (50/60 Hz). Specify 120, 208, 240 or 277 options only when ordering with fusing (SF, DF options).
3. Single fuse (SF) requires 120, 277 or 347 voltage option. Double fuse (DF) requires 208, 240 or 480 voltage option.
4. Not available with 347 or 480V.
5. Requires an additional switched line. Dimming driver standard. MVOLT only.
6. Also available as a separate accessory; see Accessories information at left.
7. Requires luminaire to be specified with PER option. Ordered and shipped as a separate line item.

© 2012 Acuity Brands Lighting, Inc. All rights reserved.

ANTIQUE STREET LAMPS™ — RG LED SERIES ROUND METAL TOP

CATALOG # | PROJECT | TYPE

This acorn styled luminaire consists of a decorative luminaire base with an integral globe holder/gear housing and an acorn shaped globe.

- Injection molded, refractive, clear acrylic or polycarbonate base with curved metal top
- Optional trim selection: Finials, Bands, Medallions
- Tool-less gear housing option
- Stainless steel hardware
- 9 Different styles of bases coordinate with this luminaire
- CSA listed and labeled as suitable for wet locations
- Powder coat finish
- 3" O.D. x 3" tall tenon required for mounting

Max EPA: 1.52 sq feet
Max Height: 44-1/2" (113.0cm)
Max Width: 19-1/8" (48.5cm)
Max Weight: 30 lbs (13.6 kg)
Listing: CSA listed for wet locations

Sample Catalog number as it might appear when ordering below:

RGRL	A	32LED 525 MA	4K	ARF	R5	MVOLT	ANBK	RF
Series	Decorative Base	Wattage/Lamp	Color Temperature	Lens Options	Distribution Options	Voltage	Finish	Finial Options

ARH	MD8	BS21	—
Arm Options	Med Options	Band Options	Photocontrol Options

Ordering Guide:

Series	Decorative Base	LED/Driver	Color Temperature	Lens Options	Distribution Options	Voltage	Finial Options	Arm Options[1]
RGR4L, RGRL, RGR1L, RGR2L, RGR23L	A, D, K, N[2], X, AU[2], E, M, W	32LED 525MA, 32LED 700MA	3K, 4K, 5K	ARF, PRF	R5, R3	MVOLT[3], 347, 480	FPF, SMF, SFF, PDF, GF, RF, FSF, SAF, RPF, AMF, PGF	ARH, ARY, ARU, ARV

Med Options[1]	Band Options[1]	Photocontrol Options	Fuse Options	Finish
MD3, MD4, MD5, MD6, MD7, MD8, MD9, MD10, MD11, MD12, MD13, MD14, MD15, MD16, MD17, MD18, MD19	BS1, BS2, BS3, BS4, BS5, BS6, BS7, BS8, BS21, BS41, BS51, BS61, BS71, BS81, BL1, BL2, BL3, BL4, BL5, BL6, BL7, BL8, BL21, BL31, BL41, BL51, BL61, BL71, BL81	PEB1, PEB2, PE1[4], PE3[4], PE4[4], PE7[4], PER[4]	SF, DF	DBL, DDB, DNA, DWH, CS, CM, ANBK, ANDB, ANDG, ANVG

Notes:
1. Arm, medallion and band must be selected together. None of these options can be selected alone.
2. Not available with photocontrol options PEB1 and PEB2.
3. Electronic multivolt driver capable of handling any line voltage from 120V to 277V, 50 or 60HZ.
4. Twist-lock photo control only available with AU and N bases.

Historic / Progressive RG LED SERIES

©2013 Acuity Brands Lighting, Inc. All Rights Reserved.

SSS Square Straight Steel Poles

TECHNICAL INFORMATION

EPA (ft²) with 1.3 gust

Catalog Number	Nominal mount ht. (ft)	Pole Shaft Size (in x ft)	Wall Thickness (in)	Gauge	80 mph	Max. weight	90 mph	Max. weight	100 mph	Max. weight	Bolt Circle (in)	Bolt Size (in x in x in)	Approximate ship (lbs)
SSS 10 4C	10	4.0 x 10.0	0.1196	11	30.6	765	23.8	595	18.9	473	8–9	3/4 x 18 x 3	75
SSS 12 4C	12	4.0 x 12.0	0.1196	11	24.4	610	18.8	470	14.8	370	8–9	3/4 x 18 x 3	90
SSS 14 4C	14	4.0 x 14.0	0.1196	11	19.9	498	15.1	378	11.7	293	8–9	3/4 x 18 x 3	100
SSS 16 4C	16	4.0 x 16.0	0.1196	11	15.9	398	11.8	295	8.9	223	8–9	3/4 x 18 x 3	115
SSS 18 4C	18	4.0 x 18.0	0.1196	11	12.6	315	9.2	230	6.7	168	8–9	3/4 x 18 x 3	125
SSS 20 4C	20	4.0 x 20.0	0.1196	11	9.6	240	6.7	167	4.5	150	8–9	3/4 x 18 x 3	140
SSS 20 4G	20	4.0 x 20.0	0.1793	7	14	350	11	275	8	200	8–9	3/4 x 30 x 3	198
SSS 20 5C	20	5.0 x 20.0	0.1196	11	17.7	443	12.7	343	9.4	235	10–12	1 x 36 x 4	185
SSS 20 5G	20	5.0 x 20.0	0.1793	7	28.1	703	21.4	535	16.2	405	10–12	1 x 36 x 4	265
SSS 25 4C	25	4.0 x 25.0	0.1196	11	4.8	150	2.6	100	1	50	8–9	3/4 x 18 x 3	170
SSS 25 4G	25	4.0 x 25.0	0.1793	7	10.8	270	7.7	188	5.4	135	8–9	3/4 x 30 x 3	245
SSS 25 5C	25	5.0 x 25.0	0.1196	11	9.8	245	6.3	157	3.7	150	10–12	1 x 36 x 4	225
SSS 25 5G	25	5.0 x 25.0	0.1793	7	18.5	463	13.3	333	9.5	238	10–12	1 x 36 x 4	360
SSS 30 4G	30	4.0 x 30.0	0.1793	7	6.7	168	4.4	110	2.6	65	8–9	3/4 x 30 x 3	295
SSS 30 5C	30	5.0 x 30.0	0.1196	11	4.7	150	2	50	--	--	10–12	1 x 36 x 4	265
SSS 30 5G	30	5.0 x 30.0	0.1793	7	10.7	267	6.7	167	3.9	100	10–12	1 x 36 x 4	380
SSS 30 6G	30	6.0 x 30.0	0.1793	7	19	475	13.2	330	9	225	11–13	1 x 36 x 4	520
SSS 35 5G	35	5.0 x 35.0	0.1793	7	5.9	150	2.5	100	--	--	10–12	1 x 36 x 4	440
SSS 35 6G	35	6.0 x 35.0	0.1793	7	12.4	310	7.6	190	4.2	105	11–13	1 x 36 x 4	540
SSS 39 6G	39	6.0 x 39.0	0.1793	7	7.2	180	3	75	--	--	11–13	1 x 36 x 4	605

POLE DATA

Shaft base size	Bolt circle A	Bolt projection B	Base square C	Template description	Anchor bolt description	Anchor bolt and template number
4"C	8-1/2"	2-3/4"–4"	8"	ABTEMPLATE PJS0004	AB18-0	ABSSS-4C
4"G	8-1/2"	2-3/4"–4"	8"	ABTEMPLATE PJS0004	AB30-0	ABSSS-4G
5"	10"–12"	3-3/8"–4"	11"	ABTEMPLATE PJS0010	AB36-0	ABSSS-5
6"	11"–13"	3-3/8"–4"	12-1/2"	ABTEMPLATE PJS0011	AB36-0	N/A

BASE DETAIL

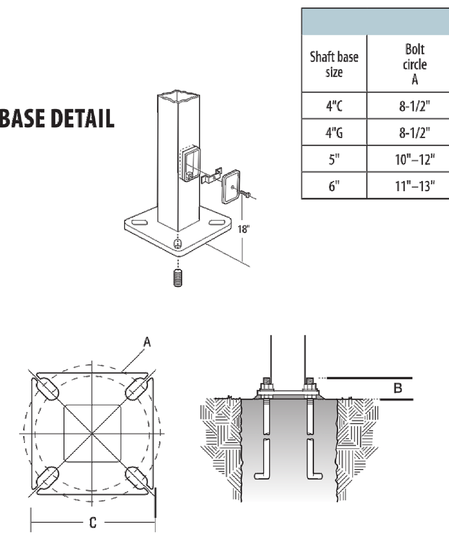

IMPORTANT:
- These specifications are intended for general purposes only. Lithonia reserves the right to change material or design, without prior notice, in a continuing effort to upgrade its products.

LITHONIA LIGHTING® An Acuity Brands Company

©1994-2012 Acuity Brands Lighting, Inc. All rights reserved. Rev. 08/08/12

Performance Data

Lumen Output

Lumen values are from photometric tests performed in accordance with IESNA LM-79-08. Data is considered to be representative of the configurations shown, within the tolerances allowed by Lighting Facts. Actual wattage may differ by +/- 8% when operating between 120-480V +/- 10%. Contact factory for performance data on any configurations not shown here.

Light Engines	Drive Current (mA)	Performance Package	System Watts	Dist. Type	40K (4000K, 67 CRI) Lumens	B	U	G	LPW
1 (49 LEDs)	350	49B350/--K	59W	SR2	5068	1	0	1	86
				SR3	4663	1	0	1	80
				SR4	4667	1	0	1	80
				SR5	4853	3	0	1	82
1 (63 LEDs)	350	63B350/--K	74W	SR2	6148	1	0	1	83
				SR3	6374	1	0	1	86
				SR4	6250	1	0	1	84
				SR5	6464	3	0	1	87
	530	63B530/--K	109W	SR2	8333	2	0	2	77
				SR3	8595	2	0	2	79
				SR4	8246	2	0	2	76
				SR5	8452	3	0	1	78

Lumen Ambient Temperature (LAT) Multipliers

Use these factors to determine relative lumen output for average ambient temperatures from 0-40°C (32-104°F).

Ambient		Lumen Multiplier
0°C	32°F	1.02
10°C	50°F	1.01
20°C	68°F	1.00
25°C	**77°F**	**1.00**
30°C	86°F	1.00
40°C	104°F	0.99

Projected LED Lumen Maintenance

Data references the extrapolated performance projections for the **KAD LED 1 63B530** platform in a **40°C ambient**, based on 10,000 hours of LED testing (tested per IESNA LM-80-08 and projected per IESNA TM-21-11).

To calculate LLF, use the lumen maintenance factor that corresponds to the desired number of operating hours below. For other lumen maintenance values, contact factory.

Operating Hours	0	25,000	50,000	100,000
Lumen Maintenance Factor	1.0	0.95	0.92	0.87

Electrical Load

Light Engines	Drive Current (mA)	System Watts	120	208	240	277	347	480
1 (49)	350	59W	0.55	0.32	0.27	0.24	0.19	0.14
1 (63)	350	74W	0.69	0.40	0.34	0.30	0.24	0.17
	530	109W	1.01	0.58	0.50	0.44	0.35	0.25

(Current (A) by voltage)

Photometric Diagrams

To see complete photometric reports or download .ies files for this product, visit Lithonia Lighting's KAD LED homepage.

Isofootcandle plots for the KAD LED 1 63B530/40K. Distances are in units of mounting height (20').

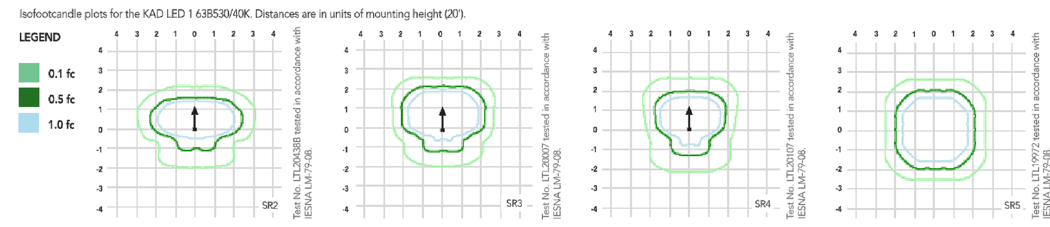

FEATURES & SPECIFICATIONS

INTENDED USE
The energy savings and long life of the KAD LED area luminaire make it a reliable choice for illuminating streets, walkways, parking lots, and surrounding areas.

CONSTRUCTION
Single-piece die-cast, aluminum housing with contoured edges has a 0.12" nominal wall thickness. Die-cast door frame has an impact-resistant, tempered glass lens that is fully gasketed with one-piece tubular silicone.

FINISH
Exterior parts are protected by a zinc-infused Super Durable TGIC thermoset powder coat finish that provides superior resistance to corrosion and weathering. A tightly controlled multi-stage process ensures a minimum 3 mils thickness for a finish that can withstand extreme climate changes without cracking or peeling.

OPTICS
Precision-molded refractive acrylic lenses housed behind the door frame lens are available in four distributions. Light engines are available in standard 4000K (67 CRI) or optional 3000K (80 CRI) or 5000K (67 CRI) configurations.

ELECTRICAL
Light engine consists of 49 or 63 high-efficacy LEDs mounted to a metal-core circuit board and aluminum heat sink, ensuring optimal thermal management and long life. Class 1 electronic driver has a power factor >90%, THD <20%, and has an expected life of 100,000 hours with <1% failure rate. Easily-serviceable surge protection device meets a minimum Category C Low (per ANSI/IEEE C62.41.2).

INSTALLATION
Extruded aluminum arm for pole or wall mounting.

LISTINGS
CSA certified to U.S. and Canadian standards. Luminaire is IP65 rated. Rated for -40°C minimum ambient.

WARRANTY
Five year limited warranty. Full warranty terms located at www.acuitybrands.com/CustomerResources/Terms_and_conditions.aspx.

Note: Specifications subject to change without notice.

© 2012 Acuity Brands Lighting, Inc. All rights reserved.

CENTURY OAK Series
Cast Aluminum Posts

SHAFT TYPES

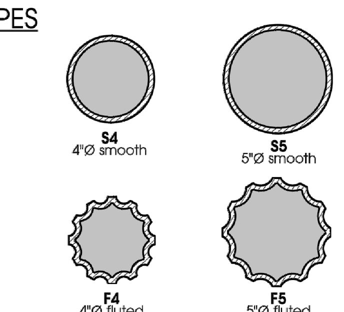

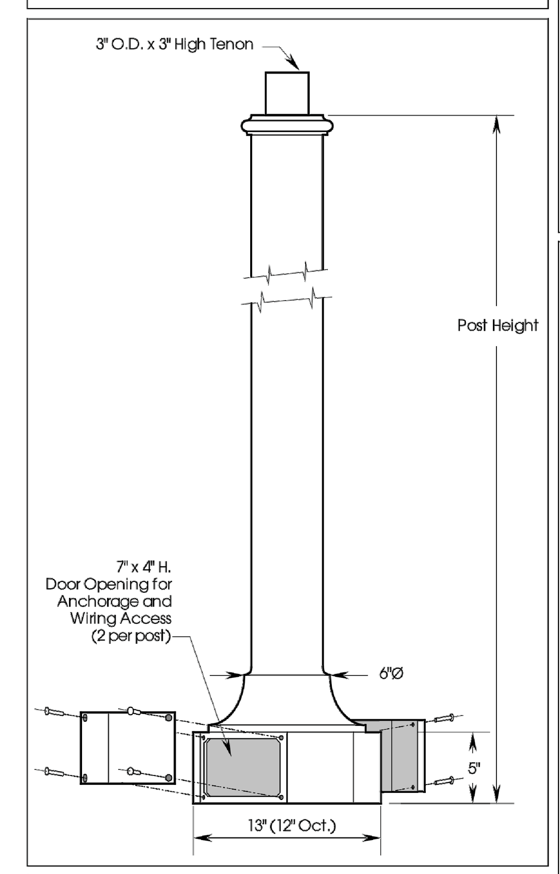

ANTIQUE Street Lamps

2011-B W. Rundberg Ln. • Austin, TX 78758 • ph(512) 977-8444 • fax(512) 977-9622

PA-22

ORDERING INFORMATION

Choose the **boldface** catalog nomenclature that best suits your needs and write it on the appropriate line.

Example: **PX CO12 12 S4 ANBK Options**

Post Series	Height	Finish[1]
PX CO12 Post, Cast Aluminum, Extruded Shaft; CENTURY OAK 12" base	**8**, **10**, **12**, **14**, **16**[2]	**ANBK** Black; **ANDB** Dark Bronze; **ANDG** Dark Green; **ANVG** Verde Green; **ANPP** Prime Painted; **CM** Custom Match; **CS** Custom Select RAL colors

Shaft Type	Options
S4 Smooth 4"Ø; **S5** Smooth 5"Ø; **F4** Fluted 4"Ø; **F5** Fluted 5"Ø	Receptacles; Banner Arms; Flagpole Holders; Custom Logos; Signage (see Signage & Accessories section in the catalog or contact Antique Street Lamps)

NOTES:
1. For finish specifications and color options, see **Finish** section in catalog or contact Antique Street Lamps.
2. 16' height not available for **S4**, **F4**, or **T4** (any 4"Ø) Shaft Type.

ANCHORAGE GUIDE

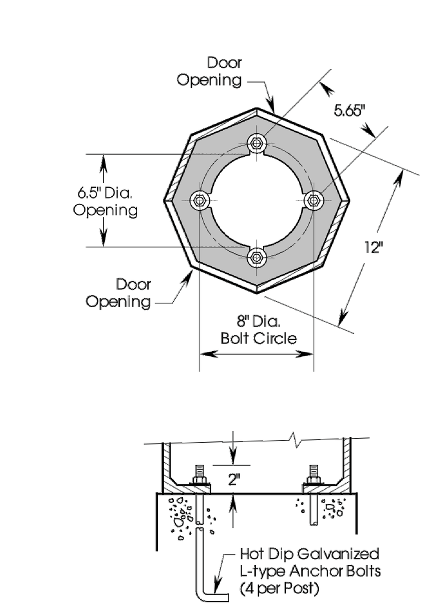

(2) FIXTURES 2A5, A32, 3A5, 4A5, 2A32

Scale: NTS

SHOE BOX STYLE FIXTURES
LED LAMP TYPE
20'-0" POLES
3'-0" AFG CONCRETE BASE X 2'-0" DIA
COLOR BLACK

(1) FIXTURES B41, B5, B4

Scale: NTS

ACORN STYLE FIXTURES
LED LAMP TYPE
12'-0" POLES
0'-6" AFG CONCRETE BASE X 1'-6" DIA
COLOR BLACK

NORR

CONSULTANT:

Giffels-Webster Engineers, Inc.
ENGINEERS · LAND SURVEYORS
PLANNERS · LANDSCAPE ARCHITECTS
2871 BOND STREET
ROCHESTER HILLS, MI 48309
PHONE (248) 852-3100
FAX (248) 852-6372

SEAL:

THIS DRAWING SHALL NOT BE USED FOR CONSTRUCTION PURPOSES UNTIL THE SEAL AND SIGNATURE OF THE RESPONSIBLE REGISTRANT APPEARS ON THE DRAWING, AND PROPER PERMIT FORMS AND RELATED FEES ARE TRANSMITTED BY THE OWNER, OWNER'S AGENT OR CONTRACTOR TO THE AUTHORITY HAVING JURISDICTION.

DATE	ISSUED FOR	REV
11/08/2012	OWNER REVIEW	
12/14/2012	SITE PLAN SUBMITTAL	
04/25/2012	RE-SUBMITTAL SITE PLAN	1
06/21/2013	RE-SUBMITTAL SITE PLAN	
08/20/2013	TENANT COORDINATION	
03/14/2014	RE-SUBMIT ENGINEERING PLANS	
06/26/2014	PHASE II SITE SUBMITTAL	
09/02/2014	PHASE II SITE RE-SUBMITTAL	

Project Manager	Drawn
A.RICCIUTI	B.COLBURN
Project Leader	**Checked**
B.COLBURN	
Date	**Dept Mgr Approval**
06/26/2014	A.RICCIUTI

Client

VERSA DEVELOPMENT
25900 W. 11 Mile Road
Southfield, MI – Sutie 250 48034
Office: (248) 996-1412

Contact: Steve Robinson

Project

PITTSFIELD DEVELOPMENT
Ann Arbor-Saline Road
Pittsfield Township, Michigan

Drawing Title

FIXTURE CUT SHEETS

DO NOT SCALE DRAWING

Project No.	Drawing No.
JCDT.12.0314	35

Statistics

Description	Symbol	Avg	Max	Min	Max/Min	Avg/Min	Avg/Max
10FI BEYOND PROP LINE	+	0.1 fc	0.3 fc	0.0 fc	N/A	N/A	0.3:1
PARKING PHASE 2	+	2.1 fc	4.5 fc	0.6 fc	7.5:1	3.5:1	0.5:1
Property Line	+	0.4 fc	1.4 fc	0.0 fc	N/A	N/A	0.3:1
WALKWAY	+	1.3 fc	2.6 fc	0.5 fc	5.2:1	2.6:1	0.5:1
WALKWAY1	+	0.7 fc	0.9 fc	0.5 fc	1.8:1	1.4:1	0.8:1

Luminaire Schedule

Symbol	Label	Catalog Number	Description	Lamp	Number Lamps	Lumens per Lamp	LLF	Wattage
	2A5	KAD LED 1 49B350/40K SR5	KAD LED WITH HLM MODULE, 49 LED's, 350mA DRIVER, 4000K COLOR TEMPERATURE, TYPE 5 LENS	ONE 59-WATT LED , DOWNLIGHT POS.	1	4853.241	0.92	118.6
	A32	KAD LED 1 63B350/40K SR3	KAD LED WITH HLM MODULE, 63 LED's, 350mA DRIVER, 4000K COLOR TEMPERATURE, TYPE 3 LENS	ONE 74-WATT LED, DOWNLIGHTPOS.	1	6373.479	0.92	74.5
	3A5	KAD LED 1 49B350/40K SR5	KAD LED WITH HLM MODULE, 49 LED's, 350mA DRIVER, 4000K COLOR TEMPERATURE, TYPE 5 LENS	ONE 59-WATT LED , DOWNLIGHT POS.	1	4853.241	0.92	177.9
	B41	RGXL X 32LED 350MA 3K ARF R3	RG LED ACORN POST TOP WITH ALUM COVER. RGS, RGR & RGC Included.	32 LED ARRAY	1	2453.672	0.92	37.7
	B4	RGXL X 32LED 530MA 3K ARF R3	RG LED ACORN POST TOP WITH ALUM COVER . RGS, RGR, RGC LED Series Included.	32 LED ARRAY	1	3245.397	0.92	56
	4A5	KAD LED 1 49B350/40K SR5	KAD LED WITH HLM MODULE, 49 LED's, 350mA DRIVER, 4000K COLOR TEMPERATURE, TYPE 5 LENS	ONE 59-WATT LED , DOWNLIGHT POS.	1	4853.241	0.92	237.2
	2A32	KAD LED 1 63B350/40K SR3	KAD LED WITH HLM MODULE, 63 LED's, 350mA DRIVER, 4000K COLOR TEMPERATURE, TYPE 3 LENS	ONE 74-WATT LED, DOWNLIGHTPOS.	1	6373.479	0.92	149

Luminaire Locations

		Location			Aim					
No.	Label	X	Y	Z	MH	Orientation	Tilt	X	Y	Z
1	2A5	430.13	94.30	23.00	23.00	180.00	0.00			
2	2A5	434.96	181.58	23.00	23.00	180.00	0.00			
5	2A5	165.39	137.41	23.00	23.00	90.00	0.00			
6	2A5	294.68	136.32	23.00	23.00	90.00	0.00			
8	2A5	489.19	50.22	23.00	23.00	180.00	0.00			
1	2A32	35.14	-12.33	23.00	23.00	0.00	0.00			
2	2A32	164.53	-12.38	23.00	23.00	0.00	0.00			
3	2A32	292.67	-16.36	23.00	23.00	0.00	0.00			
4	2A32	419.69	-6.32	23.00	23.00	0.00	0.00			
5	2A32	865.11	-19.56	23.00	23.00	0.00	0.00			
6	2A32	501.16	-12.94	23.00	23.00	0.00	0.00			
7	2A32	602.02	-19.42	23.00	23.00	0.00	0.00			
8	2A32	760.26	-19.41	23.00	23.00	0.00	0.00			
10	2A5	618.15	114.57	23.00	23.00	90.00	0.00			
14	2A32	98.88	-12.08	23.00	23.00	0.00	0.00			
15	2A32	229.56	-14.49	23.00	23.00	0.00	0.00			
16	2A32	356.02	-14.49	23.00	23.00	0.00	0.00			
18	2A32	99.49	79.63	23.00	23.00	90.00	0.00			
20	2A32	164.50	79.63	23.00	23.00	90.00	0.00			
21	2A32	294.26	78.42	23.00	23.00	90.00	0.00			
23	2A32	816.25	142.04	23.00	23.00	186.63	0.00			
24	2A32	684.88	-19.71	23.00	23.00	0.00	0.00			
28	2A32	514.48	146.46	23.00	23.00	148.78	0.00			
1	3A5	34.17	78.23	23.00	23.00	0.00	0.00			
2	3A5	100.15	138.53	23.00	23.00	90.00	0.00			
3	3A5	230.16	136.98	23.00	23.00	90.00	0.00			
4	3A5	359.56	136.16	23.00	23.00	90.00	0.00			
6	3A5	749.68	115.61	23.00	23.00	90.00	0.00			
8	3A5	668.09	147.99	23.00	23.00	270.00	0.00			
9	3A5	552.47	28.02	23.00	23.00	270.00	0.00			
2	4A5	358.93	64.28	23.00	23.00	0.00	0.00			
3	4A5	229.70	64.90	23.00	23.00	0.00	0.00			
4	4A5	864.62	84.11	23.00	23.00	0.00	0.00			
5	4A5	685.46	43.25	23.00	23.00	0.00	0.00			
1	A32	476.13	255.77	23.00	23.00	270.00	0.00	474.96	255.77	0.00
4	A32	24.51	165.11	23.00	23.00	139.04	0.00	25.28	164.22	0.00
7	A32	757.14	248.99	23.00	23.00	254.05	0.00	756.01	248.67	0.00
9	A32	816.37	38.27	23.00	23.00	270.00	0.00	815.20	38.27	0.00
10	A32	751.24	37.80	23.00	23.00	270.00	0.00	750.06	37.80	0.00
11	A32	618.88	37.44	23.00	23.00	270.00	0.00	617.71	37.44	0.00
14	A32	555.53	116.24	23.00	23.00	180.00	0.00	555.53	115.06	0.00
16	A32	762.53	162.29	23.00	23.00	-38.43	0.00	761.80	163.21	0.00
17	A32	659.43	236.97	23.00	23.00	182.21	0.00	659.39	235.80	0.00
1	B4	789.98	283.37	13.00	13.00	180.00	0.00	789.98	283.37	0.00
2	B4	740.62	282.87	13.00	13.00	180.00	0.00	740.62	282.87	0.00
3	B4	691.84	283.87	13.00	13.00	180.00	0.00	691.84	283.87	0.00
4	B4	645.71	283.87	13.00	13.00	180.00	0.00	645.71	283.87	0.00
5	B4	598.21	283.87	13.00	13.00	180.00	0.00	598.21	283.87	0.00
6	B4	548.75	283.39	13.00	13.00	180.00	0.00	548.75	283.39	0.00
8	B4	497.91	284.17	13.00	13.00	180.00	0.00	497.91	284.17	0.00
10	B4	882.35	283.29	13.00	13.00	180.00	0.00	882.35	283.29	0.00
11	B4	72.31	286.52	13.00	13.00	180.00	0.00	72.31	286.52	0.00
12	B4	121.36	286.52	13.00	13.00	180.00	0.00	121.36	286.52	0.00
13	B4	170.53	285.97	13.00	13.00	180.00	0.00	170.53	285.97	0.00
14	B4	221.30	285.83	13.00	13.00	180.00	0.00	221.30	285.83	0.00
15	B4	271.16	286.13	13.00	13.00	180.00	0.00	271.16	286.13	0.00
16	B4	424.69	269.33	13.00	13.00	270.00	0.00	424.69	269.33	0.00
17	B4	393.10	285.34	13.00	13.00	180.00	0.00	393.10	285.34	0.00
18	B4	353.21	284.95	13.00	13.00	180.00	0.00	353.21	284.95	0.00
19	B4	315.67	285.34	13.00	13.00	180.00	0.00	315.67	285.34	0.00
9	B41	278.87	206.65	13.00	13.00	90.00	0.00	278.87	206.65	0.00
20	B4	25.25	286.94	13.00	13.00	180.00	0.00	25.25	286.94	0.00
21	B4	178.52	246.16	13.00	13.00	90.00	0.00	178.52	246.16	0.00
23	B4	190.00	211.67	13.00	13.00	270.00	0.00	190.00	211.67	0.00
24	B4	302.11	246.84	13.00	13.00	270.00	0.00	302.11	246.84	0.00
25	B4	838.77	285.06	13.00	13.00	0.00	0.00	838.77	285.06	0.00
29	B4	899.73	262.34	13.00	13.00	-90.00	0.00	899.73	262.34	0.00
30	B4	924.95	181.37	13.00	13.00	0.00	0.00	924.95	181.37	0.00
31	B4	933.36	235.01	13.00	13.00	249.83	0.00	933.36	235.01	0.00
32	B4	899.08	202.25	13.00	13.00	0.00	0.00	899.08	202.25	0.00
11	B41	429.10	219.32	13.00	13.00	270.00	0.00	429.10	219.32	0.00
26	B41	825.12	165.35	13.00	13.00	180.00	0.00	825.12	165.35	0.00
28	B41	567.24	171.87	13.00	13.00	180.00	0.00	567.24	171.87	0.00
31	B41	493.20	200.68	13.00	13.00	270.00	0.00	493.20	200.68	0.00
32	B41	494.70	243.33	13.00	13.00	270.00	0.00	494.70	243.33	0.00
33	B41	530.12	171.95	13.00	13.00	180.00	0.00	530.12	171.95	0.00
34	B41	10.30	237.21	13.00	13.00	90.00	0.00	10.30	237.21	0.00
35	B41	876.16	158.79	13.00	13.00	180.00	0.00	876.16	158.79	0.00

NORR

CONSULTANT:

Giffels-Webster Engineers, Inc.
ENGINEERS · LAND SURVEYORS
PLANNERS · LANDSCAPE ARCHITECTS
2871 BOND STREET
ROCHESTER HILLS, MI 48309
PHONE (248) 852-3100
FAX (248) 852-6372

SEAL:

THIS DRAWING SHALL NOT BE USED FOR CONSTRUCTION PURPOSES UNTIL THE SEAL AND SIGNATURE OF THE RESPONSIBLE REGISTRANT APPEARS ON THE DRAWING, AND PROPER PERMIT FORMS AND RELATED FEES ARE TRANSMITTED BY THE OWNER, OWNER'S AGENT OR CONTRACTOR TO THE AUTHORITY HAVING JURISDICTION.

DATE	ISSUED FOR	REV
11/08/2012	OWNER REVIEW	
12/14/2012	SITE PLAN SUBMITTAL	
04/25/2012	RE-SUBMITTAL SITE PLAN	
06/21/2013	RE-SUBMITTAL SITE PLAN	
08/20/2013	TENANT COORDINATION	
03/14/2014	RE-SUBMIT ENGINEERING PLANS	
06/26/2014	PHASE II SITE SUBMITTAL	
09/02/2014	PHASE II SITE RE-SUBMITTAL	

Project Manager A.RICCIUTI	**Drawn** M. GOOD
Project Leader B.COLBURN	**Checked** S. TOWNSEND
Date 06/26/2014	**Dept Mgr Approval** A.RICCIUTI

Client

VERSA DEVELOPMENT
25900 W. 11 Mile Road
Southfield, MI – Sutie 250 48034
Office: (248) 996-1412

Contact: Steve Robinson

Project

PITTSFIELD DEVELOPMENT
Ann Arbor-Saline Road
Pittsfield Township, Michigan

Drawing Title

PHASE II
PHOTOMETRIC PLAN SCHEDULES

DO NOT SCALE DRAWING

Project No.	Drawing No.
JCDT.12.0314	36