Stantec

PITTSFIELD CHARTER TOWNSHIP

AOL PEDESTRIAN CROSSING IMPROVEMENTS

DRAWING INDEX:

SHEET	TITLE
1	COVER SHEET
2	GENERAL NOTE SHEET
3	LOCATION MAP
4-10	GRADING SHEETS
11-17	REMOVAL/CONSTRUCTION SHEETS
18-23	RRFB SHEETS
24-32	SIGNING/PAVEMENT MARKIING SHEETS
33-50	SPECIAL DETAILS

AUGUST 2015

Project Number: 2075133100

UTILITY AND GOVERNMENT CONTACTS

LOCAL AGENCY
Craig Lyon, PE
Pittsfield Township Office (Local Agency)
6201 W. Michigan Avenue
Ann Arbor, MI 48108
(734) 822-3101
Email: lyonc@pittsfield-mi.gov

POLICE DEPARTMENT
(734) 944-4911
EMERGENCY - 911

FIRE DEPT.
NON-EMERGENCY - (734) 944-4911
EMERGENCY - 911

WATER
Craig Lyon, PE
Pittsfield Sanitary/Water
4467 Concourse Dr.
Ann Arbor, MI 48108
(734) 822-2109
Email: lyonc@pittsfield-mi.gov

SANITARY SEWER
Craig Lyon, PE
Pittsfield Sanitary/Water
4467 Concourse Dr.
Ann Arbor, MI 48108
(734) 822-2109
Email: lyonc@pittsfield-mi.gov

PITTSFIELD TOWNSHIP PARKS & RECREATION
Mark Gasche
701 W. Ellsworth
Ann Arbor, MI 48108
(734) 822-2120

MICHIGAN DEPARTMENT OF TRANSPORTATION - BRIGHTON TSC
Craig Heidelberg, P.E.
Assistant Development Engineer
(810) 225-2630
Email: heidelbergc@michigan.gov

Wendy Ramirez
Traffic and Safety Engineer
(810) 225-2626
Email: ramirezw@michigan.gov

LANSING OFFICES
Mohammad Hammad
Signals Design Engineer
(517) 636-0289
Email: hammadm@michigan.gov

Lauri Olsen
Permit Agent
(517) 241-3028
Email: olsenl@michigan.gov

MICHIGAN DEPARTMENT OF ENVIRONMENTAL QUALITY - JACKSON OFFICE
Luke Golden
Water Resources Division
(517) 416-7001
Email: Goldenl.@Michigan.gov

ROAD COMMISSION OF WASHTENAW COUNTY
Gary Streight, PE
Washtenaw County Road Commission
555 N. Zeeb Rd
Ann Arbor, MI 48103
(734) 327-6692
Email: streightg@wcroads.org

WASHTENAW COUNTY WATER RESOURCES COMMISSIONER
Dennis Wojcik, PE
705 N. Zeeb Ave., P.O. Box 8645
Ann Arbor, MI 48107
(734) 222-6860
Emergency: 911

WASHTENAW COUNTY PARKS & RECREATION
Coy Vaughn, AICP
2230 Platt Rd.
Ann Arbor, MI 48107
(734) 971-6337

DESIGN ENGINEER
Gary Sacharski, P.E.
Stantec Michigan, LLC
3754 Ranchero Drive
Ann Arbor, MI 48108
(734) 214-2565
Email: gary.sacharski@stantec.com

GAS
Laurie Forrester
Michigan Consolidated Gas Co.
17150 Allen Road Service Center
Melvindale, MI 48122
(313) 389-7261
Email: forresterl@dtenergy.com

ELECTRIC
Clay Combee
Detroit Edison (Electric)
8001 Haggerty Road
Belleville, MI 48111
(734) 397-4112
Email: combeec@dteenergy.com

TELEPHONE
AT&T
Andy Johnson
550 S. Maple Road
Ann Arbor, MI 48103
(734) 996-5350
Email: aj1728@att.com

Debi Landstrom
Frontier Communications
109 Randolph Street Brooklyn, MI
49230 (517)592-4281
Email: Deborah.l.landstrom@ftr.com

CABLE
Ronald Southerland
Comcast Communications
24744 Eureka
Taylor, MI 48180
(313) 999-9300
Email: ronald_southerland@cable.comcast.com

FIBER OPTIC
Ryan Schaner
Fiber Link
1781 Holloway Dr.
Holt, MI 48842
Email: rschaner@comlink.com

Greg Babinski
Zayo (Communications)
737 Filley St
Lansing, MI 48906
(616) 570-9900
Email: Greg.babinski@zayo.com

Richard Chalmers
Verizon Enterprise Solutions
OSP Construction & Engineering
5688 W. Grand River Ave
Lansing, MI 48906
(517) 930-2338
Email: Rick.Chalmers@one.verizon.com

NOTE:

FOR PROTECTION OF UNDERGROUND UTILITIES AND IN CONFORMATION WITH PUBLIC ACT 53, THE CONTRACTOR SHALL DIAL 811 A MINIMUM OF THREE FULL WORKING DAYS, EXCLUDING SATURDAYS, SUNDAYS, AND HOLIDAYS PRIOR TO BEGINNING EACH EXCAVATION IN AREAS WHERE PUBLIC UTILITIES HAVE NOT BEEN PREVIOUSLY LOCATED. MEMBERS WILL THUS BE ROUTINELY NOTIFIED. THIS DOES NOT RELIEVE THE CONTRACTOR OF THE RESPONSIBILITY OF NOTIFYING UTILITY OWNERS WHO MAY NOT BE A PART OF THE "MISS DIG" ALERT SYSTEM.

V:\2075\active\207513310\Civil\Design\Drawings\133100C-01.dwg
2015/10/12 5:31 PM By: Sacharski, Gary

GENERAL NOTES

UTILITIES

MISS DIG/UNDERGROUND UTILITY NOTIFICATION
For the protection of underground utilities and in conformance with Public Act 174 of 2013, the Contractor shall contact MISS DIG System, Inc. by phone at 811 or 800-482-7171 or via the web at either elocate.missdig.org for single address or rte.missdig.org, a minimum of 3 business days prior to excavating, excluding weekends and holidays.

OUT OF SERVICE UTILITIES
If plan information indicates an existing underground utility is or will be out of service within the limits of this contract, the Contractor is cautioned to treat such a line as if it were still in service and notify "Miss Dig" when working in the area of the out of service facility.

EXISTING WATER MAINS AND SEWERS
The Contractor shall be responsible for any damage to properly identified existing water mains and/or existing sewers during the construction of this project.

ROW / REAL ESTATE

PROPERTY OWNERS
Property owner's names, where shown, are for information only, and their accuracy is not guaranteed.

MARKETABLE TIMBER
Marketable timber shall be made available to the property owner in accordance with Section 201.03 of the 2012 Standard Specifications for Construction.

LAWN SPRINKLER SYSTEMS AND LANDSCAPING
Owners of existing lawn sprinkler systems and/or landscaping shall be notified (in writing with a copy sent to the Engineer) by the Contractor two weeks in advance of any work to be done that will affect those systems and/or landscaping. If the property owner fails to relocate the lawn sprinkler system prior to the Contractor beginning work, and if the Contractor cuts the system during the construction, the Contractor shall cap the system pipe and witness the location of the cap with a wooden stake for the property owner's use. The Contractor shall place the salvaged sprinkler heads on the property owner's property. If the property owner fails to relocate the landscaping prior to the Contractor beginning work, the Contractor shall carefully salvage the landscaping items and stockpile them on the property owner's property for the property owner. Any other modification to the lawn sprinkler systems and/or landscaping is the responsibility of the owner and is not part of this contract. This work is included in other items of the project.

SURVEY

ADJUSTING MONUMENT BOXES
All government corners on this project shall be preserved, whether shown or not. It may be necessary to place or adjust monument boxes, as required.

DETAILED GRADES

GRADES FOR INTERSECTIONS
All intersections are to be considered as complete units and their grades determined before construction is started.

SIDEWALK AND RAMPS
Maximum ramp slope of 8.3% (Typical) allowed, unless otherwise specified on plan sheets.

All sidewalk and ramps are 5 feet (Typical), unless otherwise specified on plan sheets.

TEMPORARY BULKHEADS
Temporary bulkheads may be required for the part width construction of the culverts and sewers. All cost associated with the temporary bulkheads are included in the item of the pipe.

PAVEMENT

PAVEMENT AND HMA SURFACE REMOVAL QUANTITIES
Pavement and HMA Surface removal as shown on the plans will be at the discretion of the Engineer. If in his/her judgment, areas of pavement may be left in place, or additional areas added to provide the proper cross-section and base. Changes will be made in the quantities.

SOIL BORINGS AND/OR PAVEMENT CORES
The soil boring logs and/or pavement cores represent point information. No inference should be made that subsurface or pavement conditions are the same at other locations.

CONCRETE HAND FINISHING
Hand finishing of concrete pours to be struck off and consolidated by hand methods will be permitted on variable width lanes and lanes formed by flexible forms for short radius curves, as directed by the Engineer.

CURB & GUTTER

CURB CUTS FOR MEDIAN CROSSOVER ISLANDS
The Contractor shall install two 10 foot Detail L Concrete Driveway Openings (Standard Plan R-29) in all raised curb median islands for maintenance purposes. The curb cuts shall be placed as detailed on the plans. The curb cuts shall be included in the pay item for the curb and gutter.

SIGNS

GENERAL
All signs shall be installed, removed and/or salvaged according to the current edition of "Michigan Manual on Uniform Traffic Control Devices" and the current edition of Michigan Department of Transportation (MDOT) "Standard Specifications For Construction."

All signs on the plans that do not have a recommendation are to be retained.

EXISTING SIGN RELOCATION
Any permanent signs requiring relocation due to Contractor operations shall be salvaged and reset by the Contractor at locations designated by the Engineer. Signs and posts damaged during the removal and storage operations shall be replaced with new signs and posts. The cost of this work shall be borne by the Contractor.

PLAN SCALE
The final plans submitted with the proposal are not to scale. Where proposed on plan sheets, the signs and structures shall be fabricated in accordance to Typical Plans, Standards, and/or Details at locations described.

SIGN LAYOUT
Sign layouts shall be according to the current English edition of "Standard Highway Signs" manual or as detailed in plans.

SHEETING
Handling and installation of all signs shall conform with the sheeting manufacturer's specifications and guidelines.

Signs that have wrinkled or twisted sheeting may be rejected.

SIGN INSTALLATION
When attaching signs to supports, tighten the nut, not the bolt head.

Nylon washers shall be placed between the steel washer and the sign face sheeting. The nylon washers are to be considered part of the attaching devices and hardware. Nylon washers shall have a 3/8 inch inner diameter, a 7/8 inch outer diameter and a 1/16 inch thickness.

OVERHEAD STRUCTURES
All actual heights of new overhead sign structures must be determined by the Contractor and verified by the Engineer prior to end support structures being fabricated.

TURF ESTABLISHMENT
Turf establishment shall be applied to ground surface areas disturbed by signing operations and conform to necessary treatments and workmanship specified in the current edition of Michigan Department Of Transportation (MDOT) "Standard Specifications For Construction", Section 816.

SIGNALS (RRFB)

NOTIFICATIONS TO MAINTAINING AGENCIES
Contact County (and any other maintaining agency) seven working days prior to start of construction.

TREE TRIMMING
All tree trimming required to clear new or salvaged street lighting & Mast Arm Poles shall be included in the pay item & no extra payment shall be made.

FACILITIES NOT ON PLANS
Existing O.H. & T.S. facilities are not necessarily shown on plans.

WOOD POLE INSTALLATION
Install pedestals and poles so as not to interfere with traffic.

MAST ARM POLES AND FOUNDATION
Contractor shall contact Engineer 72 hours prior to pouring foundations in order to verify soil condition, depth and determine if casing is required.

EXISTING STREET SIGNS
All traffic street signs such as "no parking", "no standing", etc. shall be transferred from old std. or pole to new std. or pole at same location or in close proximity by the Contractor.

UNDERGROUND UTILITY SEPARATION
A minimum clearance of 3'-6" horizontal & 1'-0" vertical must be maintained between proposed facilities & existing U.G. water facilities.

PLAN DEVIATIONS DURING CONSTRUCTION
No changes from plans in location of supporting structures placement or RRFB Assembly equipment will be allowed without prior approval of the Engineer.

POLE BAND CLAMP ACCEPTANCE
The current basis of acceptance for this material is now part of the QPL (Qualified Product List). This can be found in the materials Acceptance Requirements Table, published in the MQAP and repeated for convenience in the Materials Source Guide.

ENVIRONMENTAL

PROTECTED TURTLES
Historical records for protected turtles exist within or near this project. These turtle species warrant special consideration as they are rare in Michigan. In the event turtles are observed within the construction zone, move the turtle(s) into adjacent vegetative cover, away from physical work activities. If possible, please take a photo and immediately contact the Environmental Services Section at (517) 373-8350 to confirm identification.

VENOMOUS SNAKES
Historical records for the Eastern Massasauga Rattlesnake exist within or near this project. This venomous snake is a state special concern and federal candidate species that warrants special consideration. In the event that this species is discovered within the construction zone, immediately move personnel away from the snake and contact the Environmental Services Section at (517) 373-8350 to confirm identification.

INDIANA BAT
No tree cutting will be conducted between April 1 and October 15 as a mitigation measure to avoid potential impacts to the Indiana Bat. Trees greater than 3 inches diameter at breast height (dbh) shall not be removed as part of vegetation clearing activities within the above dates.

EMERALD ASH BORER
All materials generated from removing ash trees or ash stumps shall be handled and disposed of as per the Michigan Department of Agriculture requirements. Any additional cost shall be included in the pay items for horticultural work, clearing, tree or stump removal.

RECREATIONAL PROPERTIES
The Contractor shall not park any vehicles or store any equipment on public recreational property. Access to the recreational properties must also be maintained at all times. Non compliance, even without the knowledge and approval of Engineer, can result in penalties up to and including termination of the construction contract and loss of federal funding for the project. Should there be any questions regarding this requirement, contact the Environmental Services Section at (517) 373-8350.

NOTES APPLYING TO STANDARD PLANS

Where the following items are called for on plans, they are to be constructed according to the standard plan given below opposite each item unless otherwise indicated.

Title	Plan No.
ROAD	
SIDEWALK RAMP AND DETECTABLE WARNING DETAILS	R-28-I
DRIVEWAY OPENINGS & APPROACHES AND CONCRETE	R-29-I
CONCRETE CURB AND CONCRETE CURB & GUTTER	R-30-G
CULVERT SLOPED END SECTION	R-95-F
BRIDGE	
PAVEMENT MARKINGS	
PAVEMENT MARKINGS FOR INTERSECTIONS	PAVE-930-B
INTERSECTION, STOP BAR AND CROSSWALK MARKINGS	PAVE-945-B
STATEWIDE TRAFFIC SIGNALS	
CONDUIT (DIRECT BURIAL/ENCASED)	SIG-023-A *
SIGN MOUNTED BEACON	SIG-027-A *
PEDESTRIAN PUSH BUTTON DETAILS	SIG-120-A *
TS MAST ARM POLE/MAST ARM DETAILS - CATEGORY III	SIG-283-A *
TS MAST ARM STANDARD FOUNDATIONS	SIG-284-A *
MACOMB COUNTY TRAFFIC SIGNALS	
OAKLAND COUNTY TRAFFIC SIGNALS	
WAYNE COUNTY TRAFFIC SIGNALS	
SIGNING	
STANDARD SIGN INSTALLATIONS	SIGN-100-F *
SIGN LOCATION CODES PLACEMENT	SIGN-115-C
ROADSIDE SIGN LOCATIONS & SUPPORT SPACING	SIGN-120-D
SIGN SUPPORT SELECTION CHARTS	SIGN-150-D *
STEEL POSTS	SIGN-200-D *
WORK ZONE DEVICES	
TEMPORARY TRAFFIC CONTROL DEVICES	WZD-125-E *

* Denotes Special Detail

NO.	DATE	AUTH	DESCRIPTION

Stantec
Stantec
3754 Ranchero Dr.
Ann Arbor, MI U.S.A.
Tel:734.761.1010
Fax:734.761.1200
www.stantec.com

C & A Engineers
119 Pere Marquette Dr.
Lansing, Michigan 48912 (517) 925-8362
www.caengineersllc@caengineersllc.com

GENERAL NOTE SHEET
DATE:10-01-15 JN: PERMIT
FILE: SCALE: NO SCALE

DRAWING SHEET 2

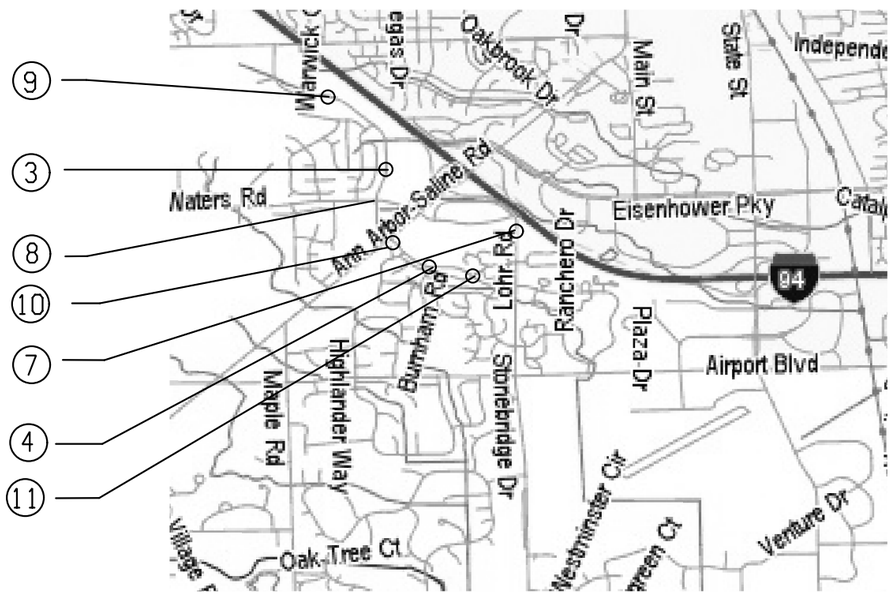

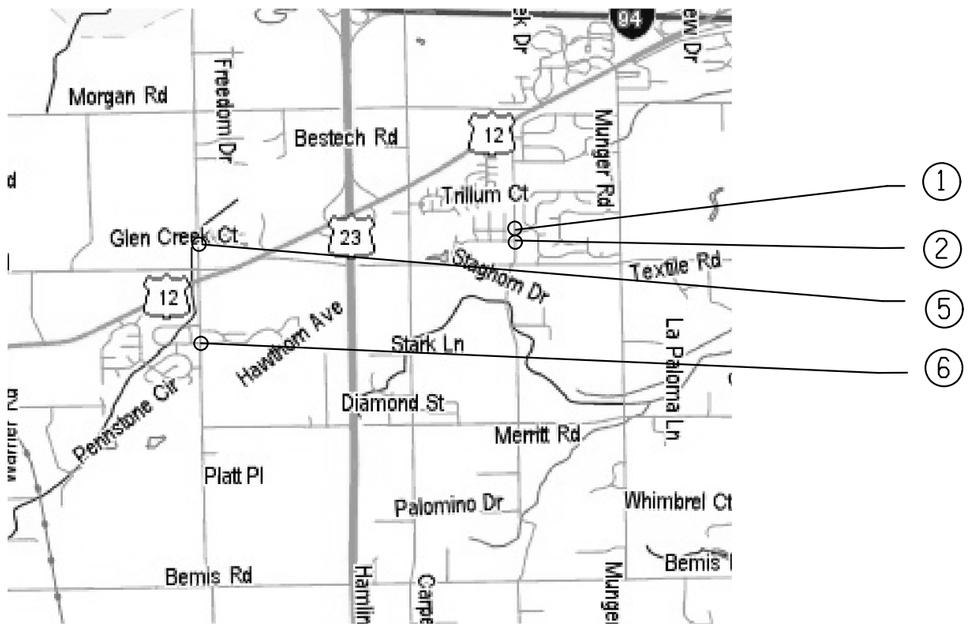

NO.	LOCATION	DRAWING	SHEET NO.
1	CRANE RD. AT AMBER WAY	ADA DETAIL GRADES/TYPICAL CROSS SECTION	4
		ADA CONSTRUCTION/REMOVAL SHEET	11
		PERMANENT SIGNING/PAVEMENT MARKING	24
2	CRANE RD AT OAKENGATES DR.	ADA DETAIL GRADES/TYPICAL CROSS SECTION	5
		ADA CONSTRUCTION/REMOVAL SHEET	12
		RRFB SHEET	18
		PERMANENT SIGNING/PAVEMENT MARKING	25
3	OAK VALLEY DR. AT BOULDER RIDGE BLVD	ADA DETAIL GRADES/TYPICAL CROSS SECTION	6
		ADA CONSTRUCTION/REMOVAL SHEET	13
		RRFB SHEET	19
		PERMANENT SIGNING/PAVEMENT MARKING	26
4	OAK VALLEY DR. AT BURNHAM RD.	ADA DETAIL GRADES/TYPICAL CROSS SECTION	7
		ADA CONSTRUCTION/REMOVAL SHEET	14
		RRFB SHEET	20
		PERMANENT SIGNING/PAVEMENT MARKING	27
5	PLATT RD. AT MULTICULTURAL ACADEMY DR.	ADA DETAIL GRADES	8
		ADA CONSTRUCTION/REMOVAL SHEET	15
		RRFB SHEET	21
		PERMANENT SIGNING/PAVEMENT MARKING	28
6	PLATT RD AT HIDDEN CREEK/LARK RD.	ADA DETAIL GRADES	9
		ADA CONSTRUCTION/REMOVAL SHEET	16
		RRFB SHEET	22
		PERMANENT SIGNING/PAVEMENT MARKING	29
7	LOHR RD AT KOHLS/WATERS PLACE DR.	PERMANENT SIGNING/PAVEMENT MARKING	30
8	OAK VALLEY DR AT WATERS RD.	PERMANENT SIGNING/PAVEMENT MARKING	31
9	OAK VALLEY DR. AT E. OF ARBOR HOSPICE DR.	RRFB SHEET	23
		PERMANENT SIGNING/PAVEMENT MARKING	32
10	OAK VALLEY DR. AT SE. OF ANN ARBOR-SALINE RD.	DETAIL GRADES/TYPICAL SHEET	10
		BUS-STOP LANDING CONSTRUCTION SHEET	17
11	OAK VALLEY DR. AT W. OF WEATHERSTONE DR.	DETAIL GRADES/TYPICAL SHEET	10
		BUS-STOP LANDING CONSTRUCTION SHEET	17

LOCATION MAP

PITTSFIELD TOWNSHIP, MICHIGAN

NO.	DATE	AUTH	DESCRIPTION

Stantec
Stantec
2194 Commons Pkwy.
Okemos, MI 48864
Phone: 517.392.7590
Fax: 517.392.7591
www.stantec.com

C & A Engineers
119 Pere Marquette Dr.
Lansing, Michigan 48912 (517) 925-6362
www.caengineers@caengineers.com

LOCATION MAP SHEET

JN: PERMIT

SCALE: 1" = 30'

DATE:10-01-15

FILE:

DRAWING SHEET 3

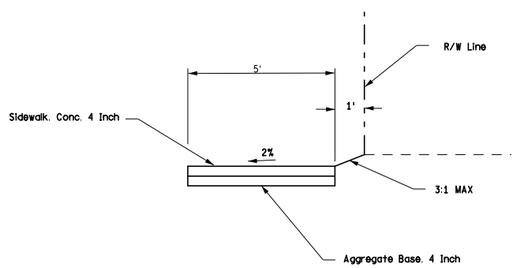

SECTION B-B

TYPICAL CROSS SECTION

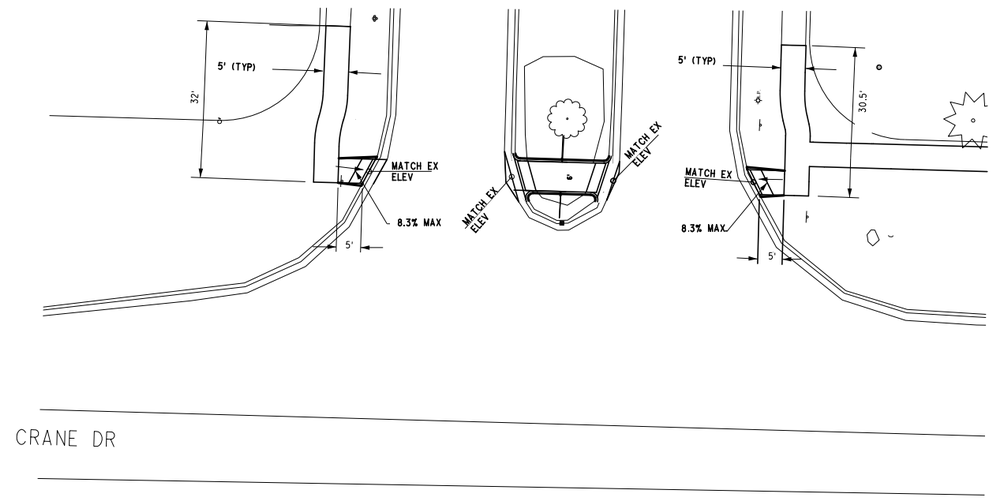

DETAIL GRADES

NO.	DATE	AUTH	DESCRIPTION

Stantec
Stantec
3950 Research Park Dr.
Ann Arbor, MI U.S.A.
Ph:734.761.1010
Fax:734.741.0038
www.stantec.com

C & A Engineers
119 Pere Marquette Dr.
Lansing, Michigan 48912 (517) 325-8362
www.caengineerlic@caengineers.com

CRANE AT AMBER WAY ADA DETAIL GRADES/TYPICAL SHEET

DATE: 10-01-15

JN: PERMIT

FILE:

SCALE: NO SCALE

DRAWING SHEET 4

N

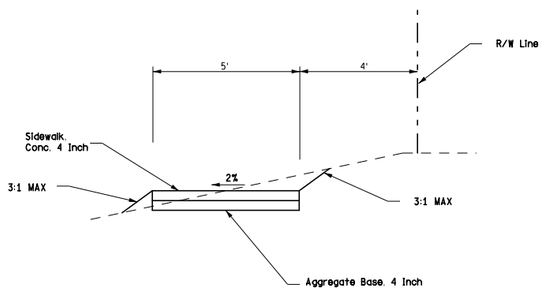

SECTION A-A

TYPICAL CROSS SECTION

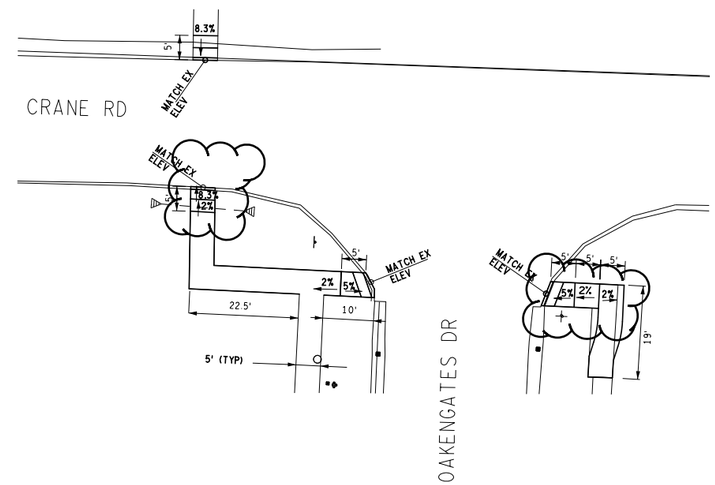

DETAIL GRADES

NO.	DATE	AUTH	DESCRIPTION

Stantec
Stantec
1961 Plymouth Rd.
Ann Arbor, MI U.S.A.
Tel:734.761.1010
Fax:734.761.1820
www.stantec.com

C & A Engineers
119 Pere Marquette Dr.
Lansing, Michigan 48912 (517) 325-8362
www.caengineers1@caengineers1.com

CRANE AT OAKENGATES ADA DETAIL GRADES/TYPICAL SHEET

DATE: 10-01-15

JN: PERMIT

FILE:

SCALE: NO SCALE

DRAWING SHEET 5

N

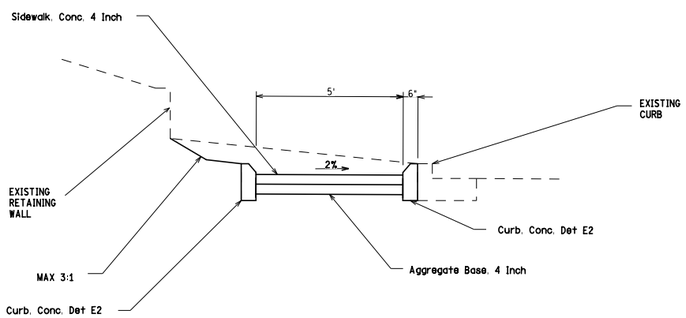

NOTE:
CONTRACTOR SHALL ESTABLISH POSITIVE DRAINAGE ON THE SIDEWALK AND THE ADA RAMP

SECTION C-C

TYPICAL CROSS SECTION

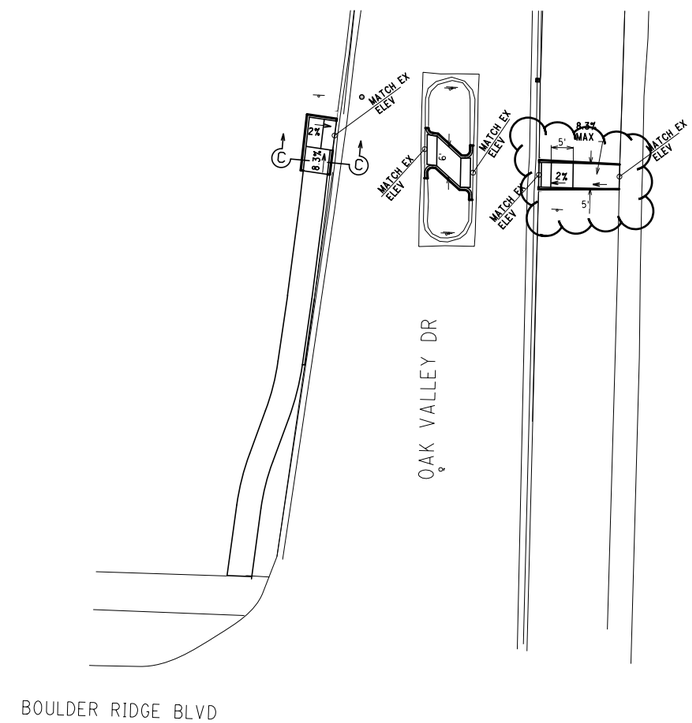

DETAIL GRADES

NO.	DATE	AUTH	DESCRIPTION

Stantec
Stantec
3950 Research Park Dr.
Ann Arbor, MI U.S.A.
Ph:734.761.1010
Fax:734.761.1086
www.stantec.com

C & A Engineers
119 Pere Marquette Dr.
Lansing, Michigan 48912 (517) 325-8362
www.caengineers@ameritech.net

OAK VALLEY AT BOULDER RIDGE ADA DETAIL GRADES/TYPICAL SHEET

DATE: 10-01-15

JN: PERMIT

FILE:

SCALE: NO SCALE

DRAWING SHEET 6

DETAIL GRADES

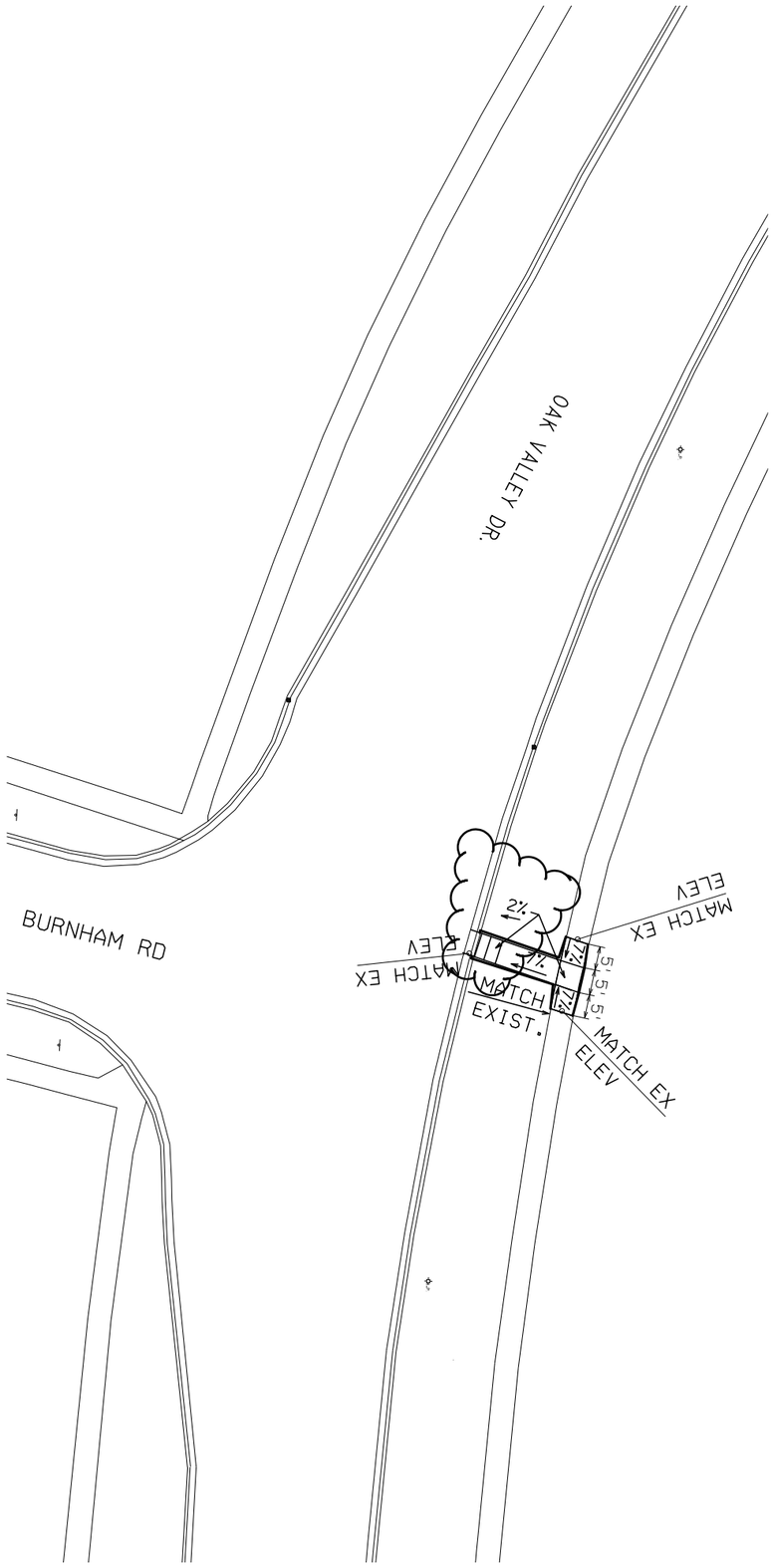

DRAWING	SHEET		OAK VALLEY DR. AT BURNHAM RD. ADA DETAIL GRADES SHEET		C & A Engineers	Stantec
	7		DATE: 10-01-15	JN: PERMIT	119 Pere Marquette Dr. Lansing, Michigan 48912 (517) 925-8362 www.caengineerlicensing@caengineerslic.com	Stantec 3154 Bensons Dr. Ann Arbor, MI U.S.A. Tel:734.761.1010 Fax:734.761.1200 Ann@stantec.com
			FILE:	SCALE: NO SCALE		

NO.	DATE	AUTH	DESCRIPTION

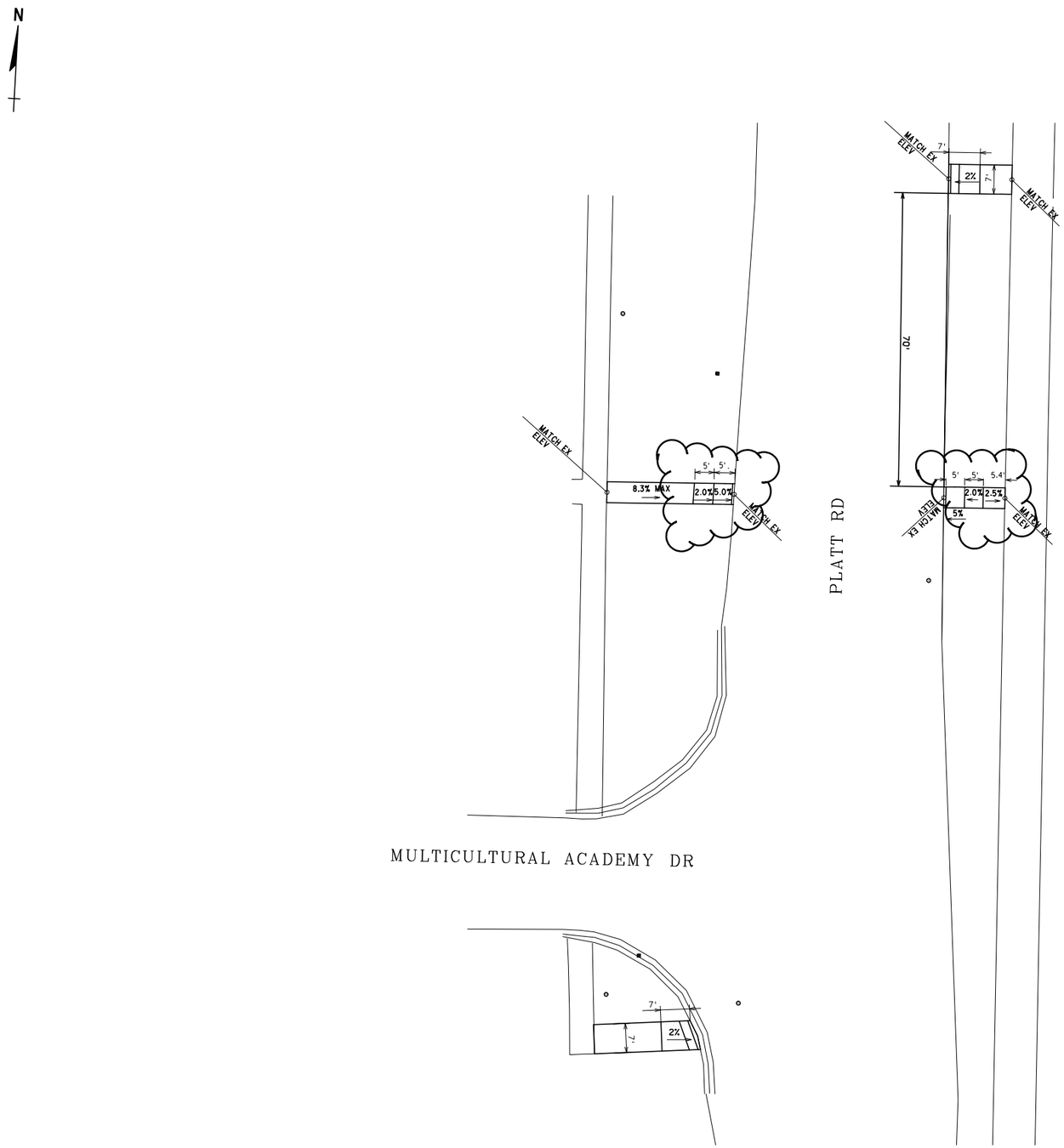

DETAIL GRADES

NO.	DATE	AUTH	DESCRIPTION

C & A Engineers
119 Pere Marquette Dr.
Lansing, Michigan 48912 (517) 325-8362
www.caengineers@ameritech.com

PLATT RD AT MULTICUTURAL ACADEMY DR ADA DETAIL GRADES SHEET

DATE: 10-01-15

JN: PERMIT

FILE:

SCALE: NO SCALE

DRAWING SHEET 8

DETAIL GRADES

NO.	DATE	AUTH	DESCRIPTION

Stantec
Stantec
3950 Research Park Blvd.
Ann Arbor, MI U.S.A.
Ph:734.761.1010
Fax:734.761.1086
www.stantec.com

C & A Engineers
119 Pere Marquette Dr.
Lansing, Michigan 48912 (517) 325-8362
www.caengineers@ameritech.net

PLATT AT LARK/HIDDEN CREEK ADA IMPROVEMENT DETAIL SHEET

DATE: 10-01-15

1 QPN: PERMIT

FILE:

SCALE: NO SCALE

DRAWING SHEET 9

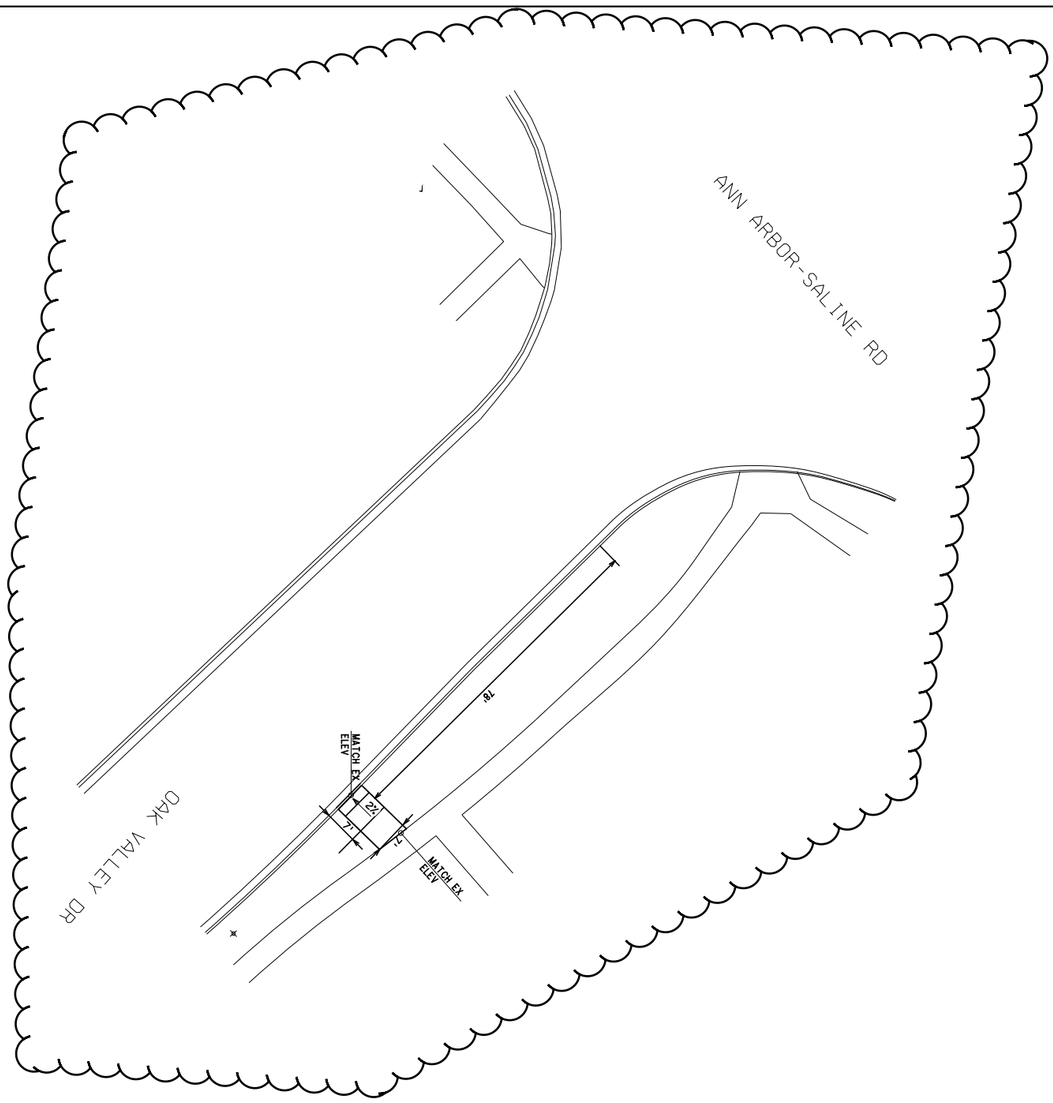

DETAIL GRADES

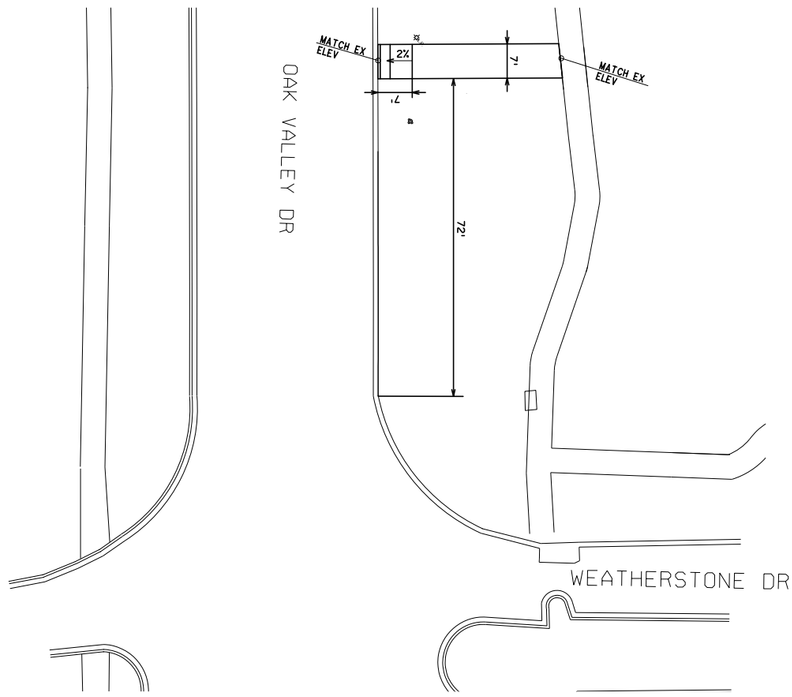

DETAIL GRADES

DRAWING	SHEET					
	10		OAK VALLEY AT WEATHERSTONE DR AND AA-SALINE RD DETAIL GRADES SHEET	C & A Engineers 119 Pere Marquette Dr. Lansing, Michigan 48912 (517) 925-8362 www.caengineerlldcaengineerllc.com	Stantec Stantec 3154 Bensdorf Dr. Ann Arbor, MI U.S.A. Tel:734.761.1010 Fax:734.761.1200 Ann@stantec.com	
			DATE: 10-01-15 / JN: PERMIT			
			FILE: / SCALE: NO SCALE			

NO.	DATE	AUTH	DESCRIPTION

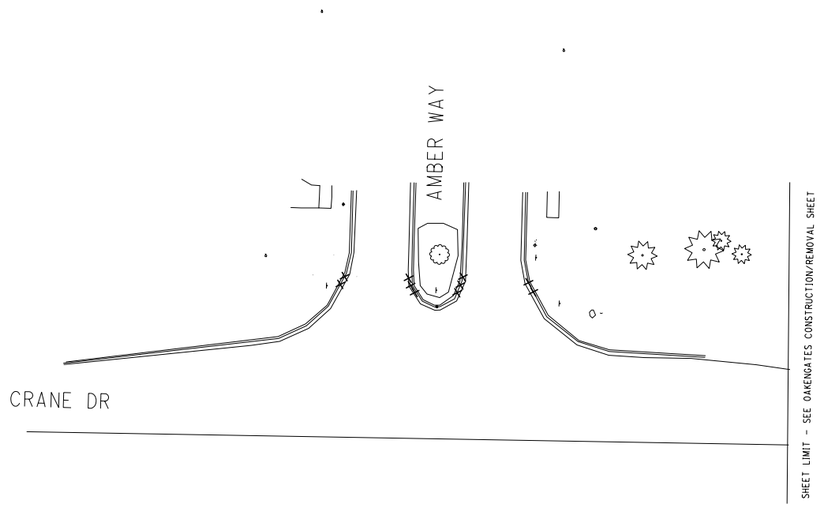

REMOVAL PLAN

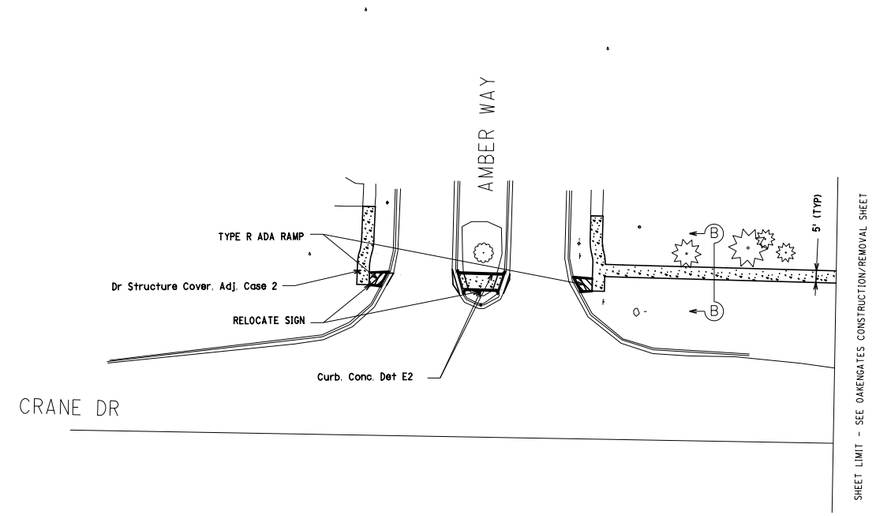

CONSTRUCTION PLAN

- Sidwalk Ramp, Conc, 4 inch
- Sidewalk, Rem
- Sidwalk Ramp, Conc, 4 inch
- Curb and Gutter, Rem
- PROPOSED CURB
- SECTION B-B SEE PLAN SHEET 4

NO.	DATE	AUTH	DESCRIPTION

Stantec
Stantec
3950 Research Dr.
Ann Arbor, MI U.S.A.
PH:734.761.1010
FAX:734.741.8080
www.stantec.com

C & A Engineers
119 Pere Marquette Dr.
Lansing, Michigan 48912 (517) 325-8362
www.caengineerllc@caengineerslic.com

CRANE AT AMBER WAY ADA REMOVAL/COONSTRUCTION SHEET

DATE: 10-01-15

JN: PERMIT

FILE:

SCALE:1" = 30'

DRAWING SHEET 11

REMOVAL PLAN

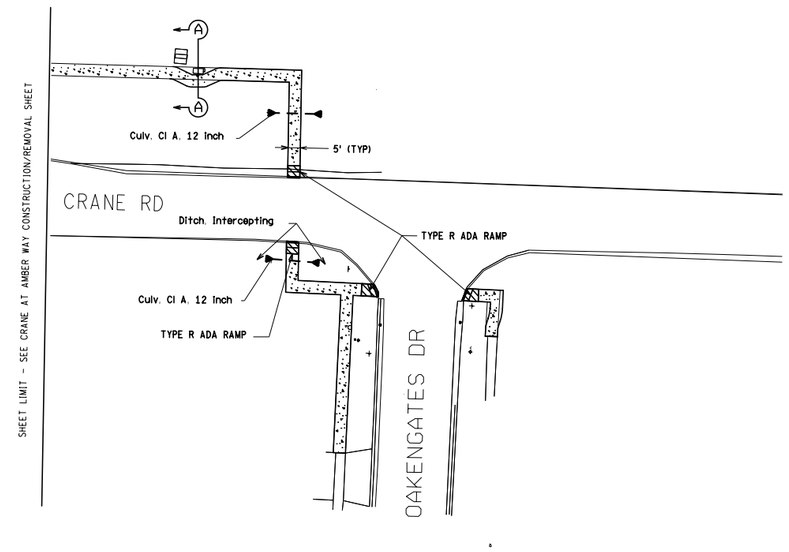

CONSTRUCTION PLAN

Sidwalk Ramp, Conc, 4 inch

Sidewalk, Rem

Sidwalk Ramp, Conc, 4 inch

xxx Curb and Gutter, Rem

PROPOSED CURB

SECTION A-A SEE PLAN SHEET 5

NO.	DATE	AUTH	DESCRIPTION

Stantec
Stantec
1961 Technology Dr.
Ann Arbor, MI U.S.A.
Tel:734.761.1010
Fax:734.741.1020
www.stantec.com
CRANE - AT - OAKENGATES/AMBER

C & A Engineers
119 Pere Marquette Dr.
Lansing, Michigan 48912 (517) 325-8362
www.caengineerlic@caengineers.llc.com

CRANE AT OAKENGATES ADA CONSTRUCTION/REMOVAL SHEET

DATE: 10-01-15

JN: PERMIT

FILE:

SCALE:1" = 30'

DRAWING SHEET 12

N

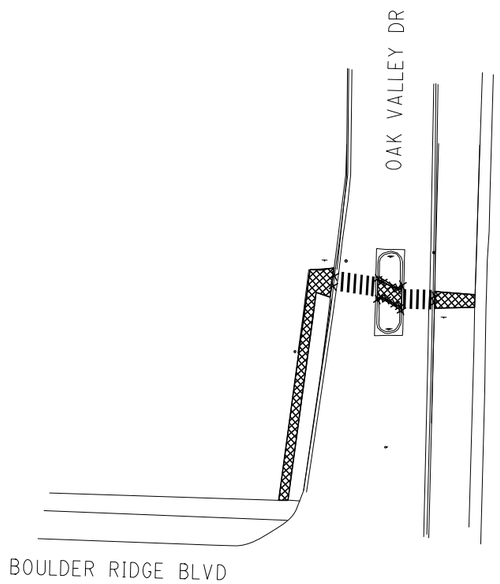

REMOVAL PLAN

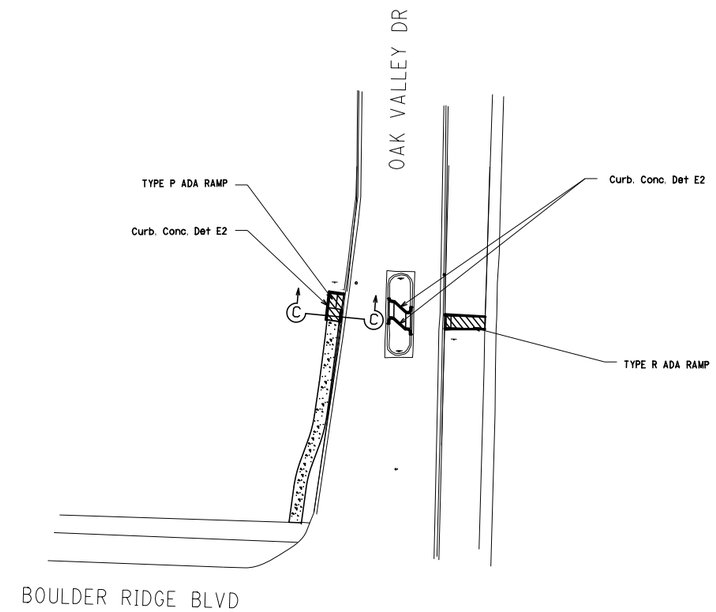

CONSTRUCTION PLAN

- Sidwalk Ramp, Conc, 4 inch
- Sidewalk, Rem
- Sidwalk Ramp, Conc, 4 inch
- Curb and Gutter, Rem
- PROPOSED CURB
- SECTIONS C-C SEE PLAN SHEET 6

NO.	DATE	AUTH	DESCRIPTION

Stantec
Stantec
3950 Research Dr.
Ann Arbor, MI U.S.A.
Tel:734.761.1010
Fax:734.761.1820
www.stantec.com

C & A Engineers
119 Pere Marquette Dr.
Lansing, Michigan 48912 (517) 325-8362
www.canglineer11@canglineerslic.com

OAK VALLEY AT BOULDER RIDGE ADA CONSTUCTION/REMOVAL SHEET

DATE: 10-01-15 JN: PERMIT

FILE: SCALE: 1" = 30'

DRAWING SHEET 13

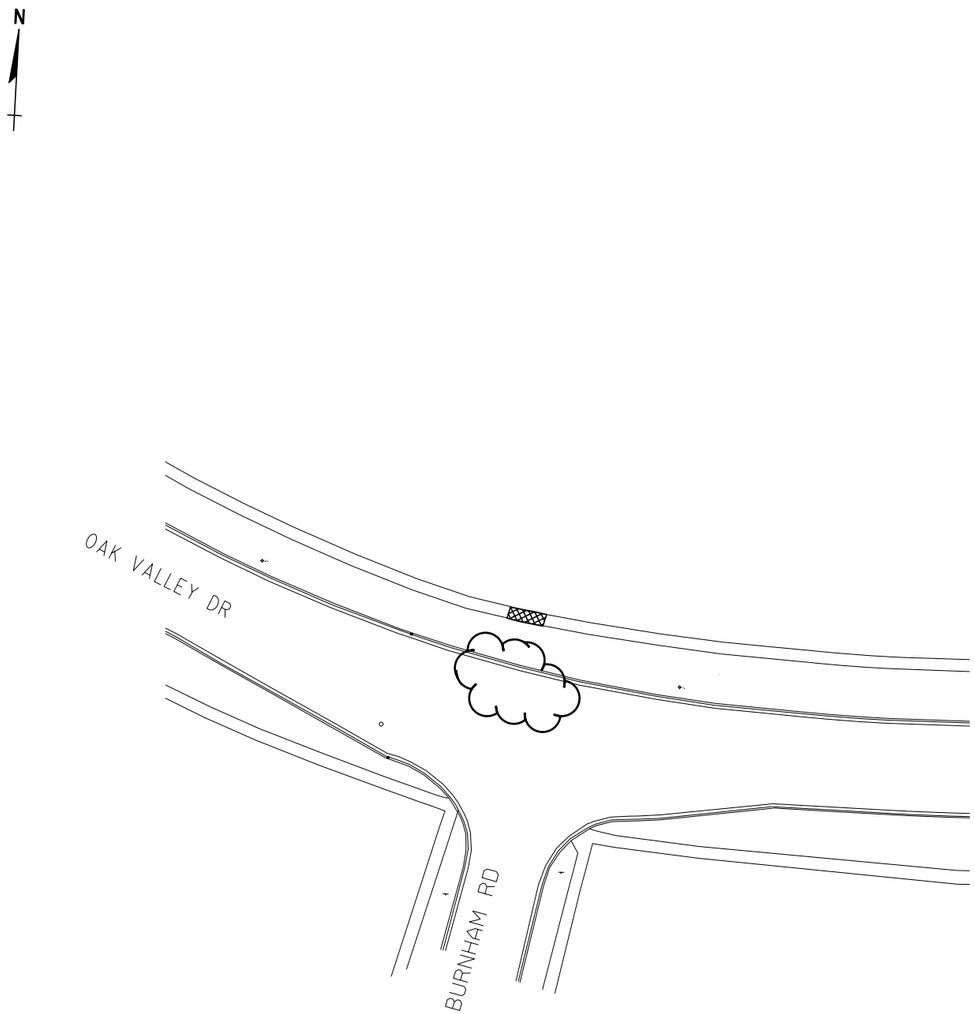

REMOVAL PLAN

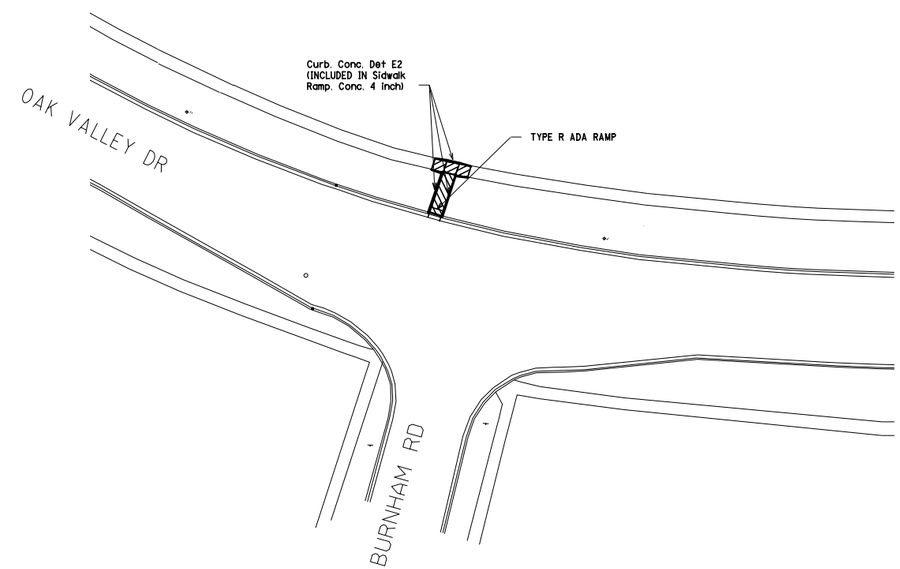

CONSTRUCTION PLAN

- Sidwalk Ramp, Conc, 4 inch
- Sidewalk, Rem
- Sidwalk Ramp, Conc, 4 inch
- xxx Curb and Gutter, Rem
- PROPOSED CURB

NO.	DATE	AUTH	DESCRIPTION

Stantec
Stantec
3950 Research Dr.
Ann Arbor, MI U.S.A.
Ph:734.761.1010
Fax:734.761.1020
www.stantec.com

C & A Engineers
119 Pere Marquette Dr.
Lansing, Michigan 48912 (517) 325-8362
www.caengineers@cacaengineers.com

OAK VALLEY DR AT BURNHAM RD ADA CONSTRUCTION/REMOVAL SHEET

DATE: 10-01-15
JN: PERMIT
FILE:
SCALE: 1" = 30'

DRAWING SHEET 14

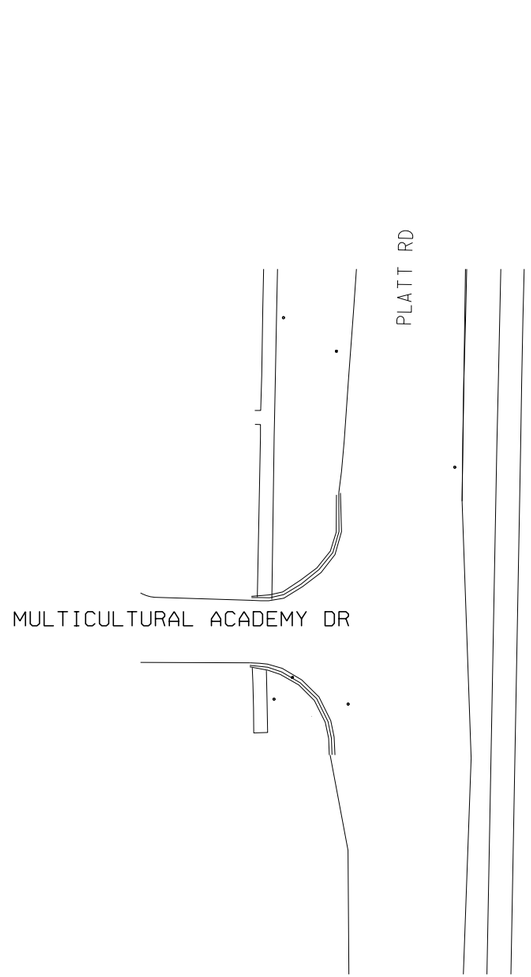

REMOVAL PLAN

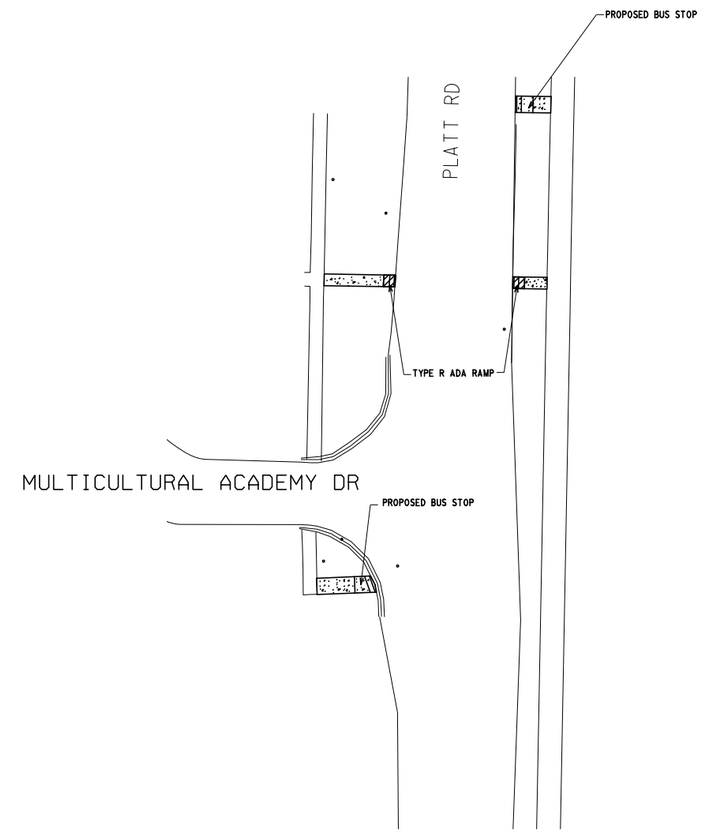

CONSTRUCTION PLAN

COORDINATE OF THE DESIGN AND CONSTRUCTION OF THE BUS STOP PADS & LANDING IS REQUIRED WITH RIDE. CONTRACTOR MUST CONTACT RIDE 72 HOURS BEFORE CONSTRUCTION BEGINS.

- Sidwalk Ramp, Conc, 4 inch
- Sidewalk, Rem
- Sidwalk Ramp, Conc, 4 inch
- xxx Curb and Gutter, Rem
- PROPOSED CURB

NO.	DATE	AUTH	DESCRIPTION

Stantec
Stantec
3950 Research Dr.
Ann Arbor, MI U.S.A.
PH:734.761.1010
FAX:734.761.1020
www.stantec.com

C & A Engineers
119 Pere Marquette Dr.
Lansing, Michigan 48912 (517) 325-8362
www.caengineers@caengineers.com

PLATT RD AT MULTICUTURAL ACADEMY DR ADA CONSTRUCTION/REMOVAL SHEET

DATE: 10-01-15
JN: PERMIT
FILE:
SCALE: 1" = 30'

DRAWING SHEET 15

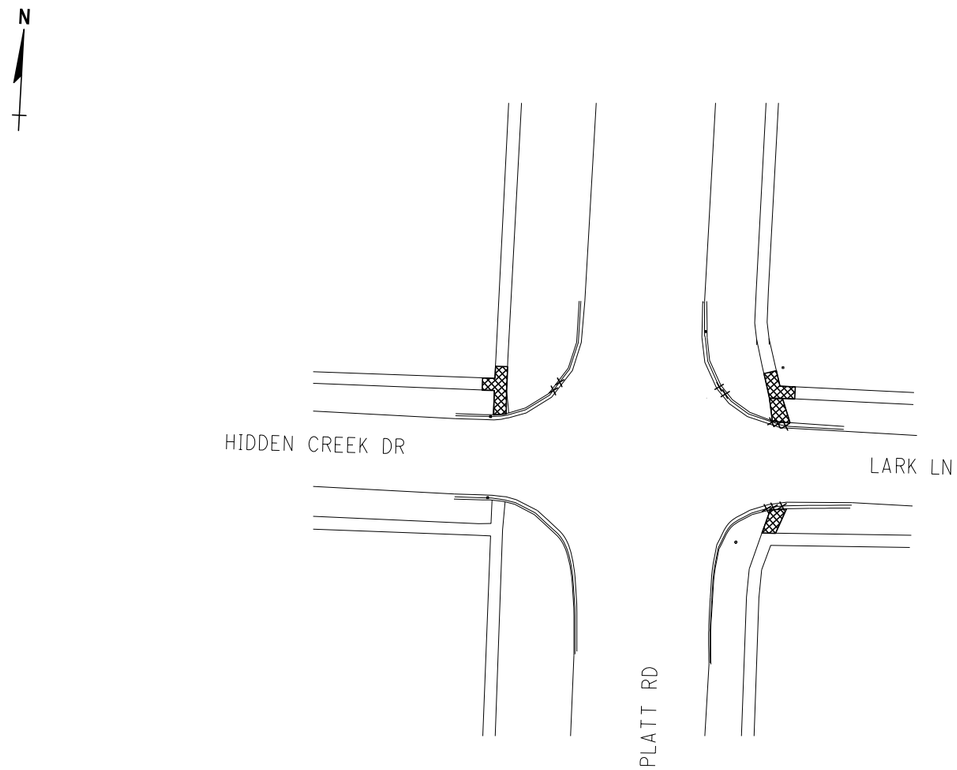

REMOVAL PLAN

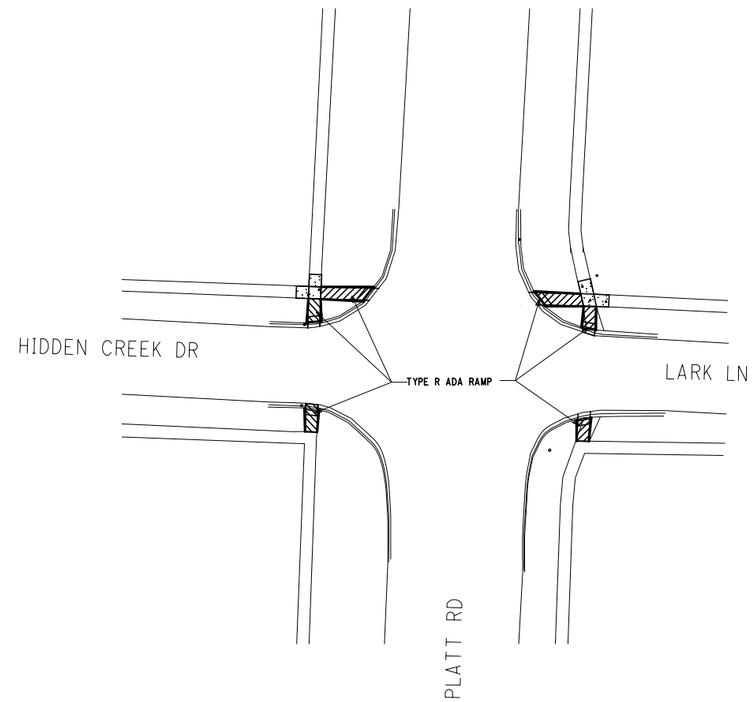

CONSTRUCTION PLAN

Sidwalk Ramp, Conc, 4 inch
Sidewalk, Rem
Sidwalk Ramp, Conc, 4 inch
Curb and Gutter, Rem
PROPOSED CURB

NO.	DATE	AUTH	DESCRIPTION

Stantec
Stantec
3950 Research Dr.
Ann Arbor, MI U.S.A.
Ph:734.761.1010
Fax:734.741.1020
www.stantec.com

C & A Engineers
119 Pere Marquette Dr.
Lansing, Michigan 48912 (517) 325-8362
www.caengineers@caengineers.com

PLATT AT LARK/HIDDEN CREEK ADA CONSTRUCTION/REMOVAL SHEET

DATE: 10-01-15
JN: PERMIT
FILE:
SCALE: 1" = 30'

DRAWING SHEET 16

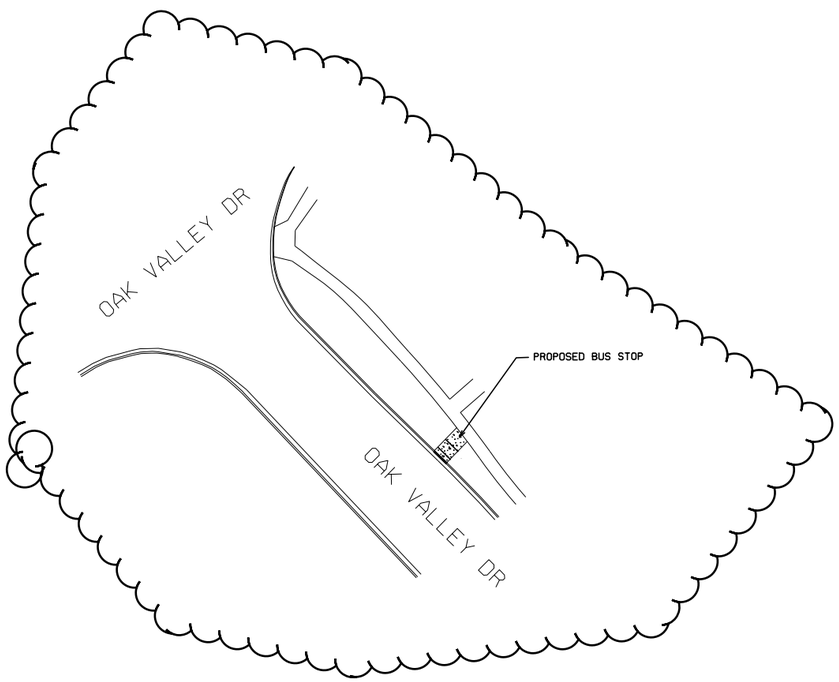

CONSTRUCTION PLAN

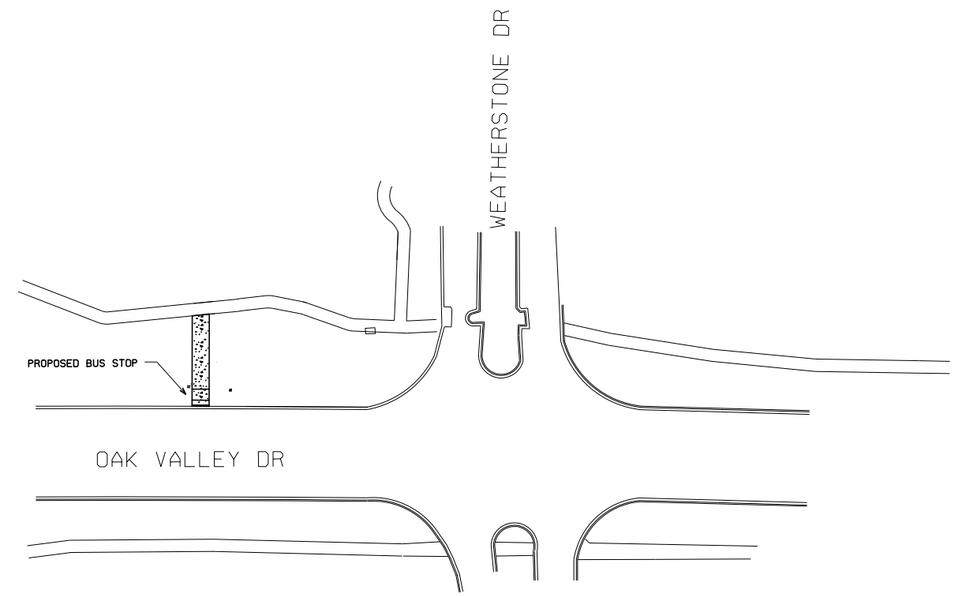

CONSTRUCTION PLAN

COORDINATE OF THE DESIGN AND CONSTRUCTION OF THE BUS STOP PADS & LANDING IS REQUIRED WITH RIDE. CONTRACTOR MUST CONTACT RIDE 72 HOURS BEFORE CONSTRUCTION BEGINS.

- Sidwalk Ramp, Conc, 4 inch
- Sidewalk, Rem
- Sidwalk Ramp, Conc, 4 inch
- Curb and Gutter, Rem
- PROPOSED CURB

NO.	DATE	AUTH	DESCRIPTION

Stantec
Stantec
3950 Research Park Blvd.
Ann Arbor, MI U.S.A.
Ph:734.761.1010
Fax:734.761.1020
www.stantec.com

C & A Engineers
119 Pere Marquette Dr.
Lansing, Michigan 48912 (517) 325-8362
www.caengineers@caengineers.com

OAK VALLEY AT WEATHERSTONE DR AND AA-SALINE RD CONSTRUCTION SHEET

DATE: 10-01-15 JN: PERMIT

FILE: SCALE: 1" = 30'

DRAWING SHEET 17

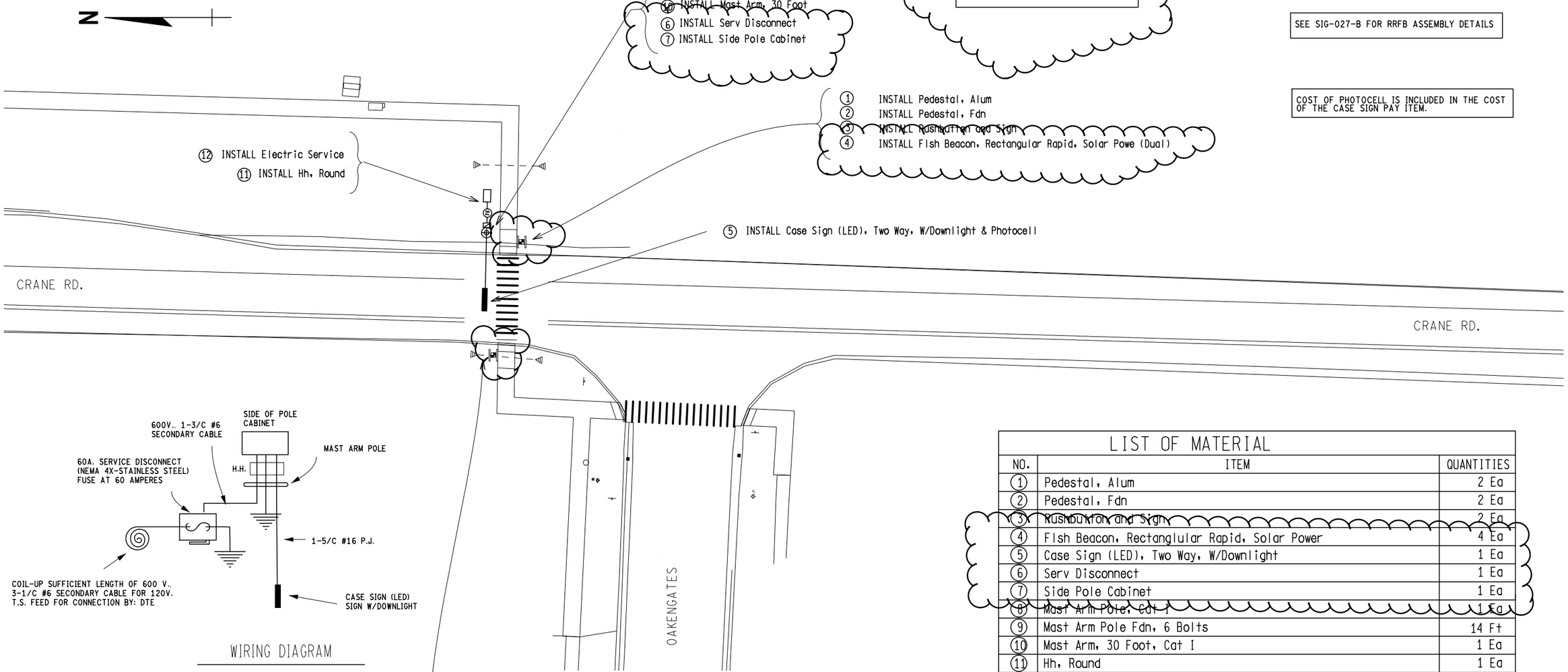

ALL PEDESTALS, MAST ARMS AND HARDWARE SHALL BE PAINTED SATIN BLACK. PAYMENT FOR THIS SHALL BE INCLUDED IN THE AFFECTED PAY ITEMS AND SHALL NOT BE PAID SEPARATELY.

SEE SIG-027-B FOR RRFB ASSEMBLY DETAILS

COST OF PHOTOCELL IS INCLUDED IN THE COST OF THE CASE SIGN PAY ITEM.

WIRING DIAGRAM

TRAFFIC SIGNAL LEGEND

- 24 INCH ROUND PRECAST TRAFFIC SIGNAL HANDHOLE
- OTHER TRAFFIC SIGNAL HANDHOLE
- RRFB ASSEMBLY & PEDESTAL (DOUBLE SIDED)
- RRFB ASSEMBLY & PEDESTAL (SINGLE SIDED)
- ANCHOR BASE STEEL STRAIN POLE AND FOUNDATION (POLE LENGTH & FOUNDATION SIZE AS CALLED OUT)
- CASE SIGN (1 WAY OR 2 WAY)
- ELECTRIC SERVICE
- CONDUIT, PROPOSED, DIRECT BURIAL
- CONDUIT, PROPOSED, DIRECTIONAL BORED

① INSTALL Pedestal, Alum
② INSTALL Pedestal, Fdn
③ INSTALL Pushbutton and Sign
④ INSTALL Fish Beacon, Rectangular Rapid, Solar Powe (Dual)

LIST OF MATERIAL

NO.	ITEM	QUANTITIES
①	Pedestal, Alum	2 Ea
②	Pedestal, Fdn	2 Ea
③	Pushbutton and Sign	2 Ea
④	Fish Beacon, Rectanglular Rapid, Solar Power	4 Ea
⑤	Case Sign (LED), Two Way, W/Downlight	1 Ea
⑥	Serv Disconnect	1 Ea
⑦	Side Pole Cabinet	1 Ea
⑧	Mast Arm Pole, Cat I	1 Ea
⑨	Mast Arm Pole Fdn, 6 Bolts	14 Ft
⑩	Mast Arm, 30 Foot, Cat I	1 Ea
⑪	Hh, Round	1 Ea
⑫	Electric Service	1 Ea
◯	Power Co. (Est. Cost to Contractor)	500 Dlr
◯	Conduit, DB, 1, 3 inch	10 Ft

NO.	DATE	AUTH	DESCRIPTION

Stantec
Stantec
2794 Renaissance Blvd.
Bensalem, PA 19020
Tel:(267) 757-1000
Fax:(267) 757-1200
www.stantec.com

C & A Engineers
119 Pere Marquette Dr.
Lansing, Michigan 48912 (517) 925-6362
www.caengineers@sbcglobal.net

CRANE RD. AT OAKENGATED RRFB SHEET

DATE:10-01-15 | JN: PERMIT | SCALE: 1" = 30'

FILE:

DRAWING SHEET 18

N

① INSTALL Pedestal, Alum
② INSTALL Pedestal, Fdn
③ INSTALL Pushbutton and Sign
④ INSTALL Fish Beacon, Rectangular Rapid, Solar Power

PLACE RRFB PEDESTALS WITHIN 6'-10' FROM CURB, AND WITHIN MAX. 2' FROM CENTER OF SIDEWALK (2% SLOPE PAD)

SEE SIG-027-B FOR RRFB ASSEMBLY DETAILS

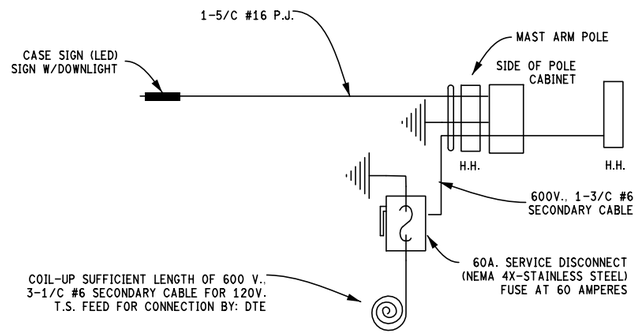

WIRING DIAGRAM

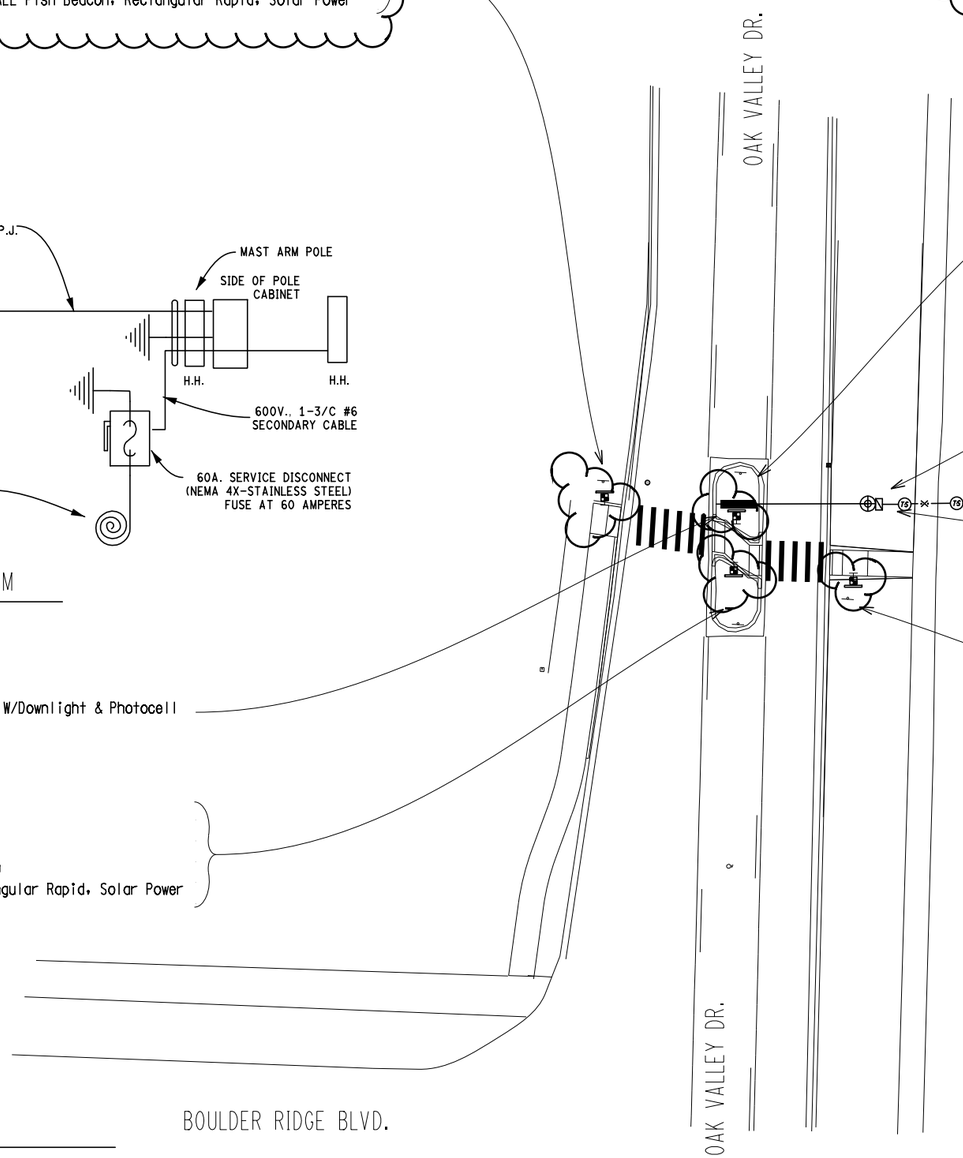

① INSTALL Pedestal, Alum
② INSTALL Pedestal, Fdn
③ INSTALL Pushbutton and Sign
④ INSTALL Fish Beacon, Rectangular Rapid, Solar Power

⑧ INSTALL Mast Arm Pole
⑨ INSTALL Mast Arm Pole Fdn, 6 Bolts
⑩ INSTALL Mast Arm, 30 Foot
⑤ INSTALL Case Sign (LED), Two Way, W/Downlight
⑥ INSTALL Serv Disconnect
⑦ INSTALL Side Pole Cabinet

⑪ INSTALL Hh, Round

⑬ INSTALL Case Sign (LED), Two Way, W/Downlight & Photocell

① INSTALL Pedestal, Alum
② INSTALL Pedestal, Fdn
③ INSTALL Pushbutton and Sign
④ INSTALL Fish Beacon, Rectangular Rapid, Solar Power

① INSTALL Pedestal, Alum
② INSTALL Pedestal, Fdn
③ INSTALL Pushbutton and Sign
④ INSTALL Fish Beacon, Rectangular Rapid, Solar Power

LIST OF MATERIAL

NO.	ITEM	QUANTITIES
1	Pedestal, Alum	4 Ea
2	Pedestal, Fdn	4 Ea
3	Pushbutton and Sign	4 Ea
4	Fish Beacon, Rectanglular Rapid, Solar Power	4 Ea
5	Case Sign (LED), Two Way, W/Downlight	1 Ea
6	Serv Disconnect	1 Ea
7	Side Pole Cabinet	1 Ea
8	Mast Arm Pole, Cat I	1 Ea
9	Mast Arm Pole Fdn, 6 Bolts	14 Ft
10	Mast Arm, 30 Foot, Cat I	1 Ea
11	Hh, Round	2 Ea
12	Electric Service	1 Ea
◯	Power Co. (Est. Cost to Contractor)	750 Dlr
◯	Conduit, Directional Bore, 1, 4 inch	5 Ft
◯	Conduit, DB, 1, 3 inch	10 Ft

TRAFFIC SIGNAL LEGEND

- 24 INCH ROUND PRECAST TRAFFIC SIGNAL HANDHOLE
- OTHER TRAFFIC SIGNAL HANDHOLE
- RRFB ASSEMBLY & PEDESTAL (DOUBLE SIDED)
- RRFB ASSEMBLY & PEDESTAL (SINGLE SIDED)
- ANCHOR BASE STEEL STRAIN POLE AND FOUNDATION (POLE LENGTH & FOUNDATION SIZE AS CALLED OUT)
- CASE SIGN (1 WAY OR 2 WAY)
- ELECTRIC SERVICE
- CONDUIT, PROPOSED, DIRECT BURIAL
- CONDUIT, PROPOSED, DIRECTIONAL BORED

ALL PEDESTALS, MAST ARMS AND HARDWARE SHALL BE PAINTED SATIN BLACK. PAYMENT FOR THIS SHALL BE INCLUDED IN THE AFFECTED PAY ITEMS AND SHALL NOT BE PAID SEPARATELY.

COST OF PHOTOCELL IS INCLUDED IN THE COST OF THE CASE SIGN PAY ITEM.

MAST ARM POLE SHALL BE GROUNDED IN THE NEAREST HH. ALL GROUNDS RODS SHALL BE CONNECTED TOGETHER WITH 1-1/C #6 AWG COPPER.

NO.	DATE	AUTH	DESCRIPTION

Stantec
Stantec
2914 Rosemary Dr.
San Angelo, TX U.S.A.
Ph:(325)-701-1000
Fax:(325)-701-1200
www.stantec.com

C & A Engineers
119 Pere Marquette Dr.
San Angelo, Texas 76903-0512 (325) 655-8362
www.caengineers.com/mail@caengineers.com

OAK VALLEY DR AT BOULDER RIDGE RRFB SHEET

DATE:10-01-15 JN: PERMIT

FILE: SCALE: 1" = 30'

DRAWING SHEET 19

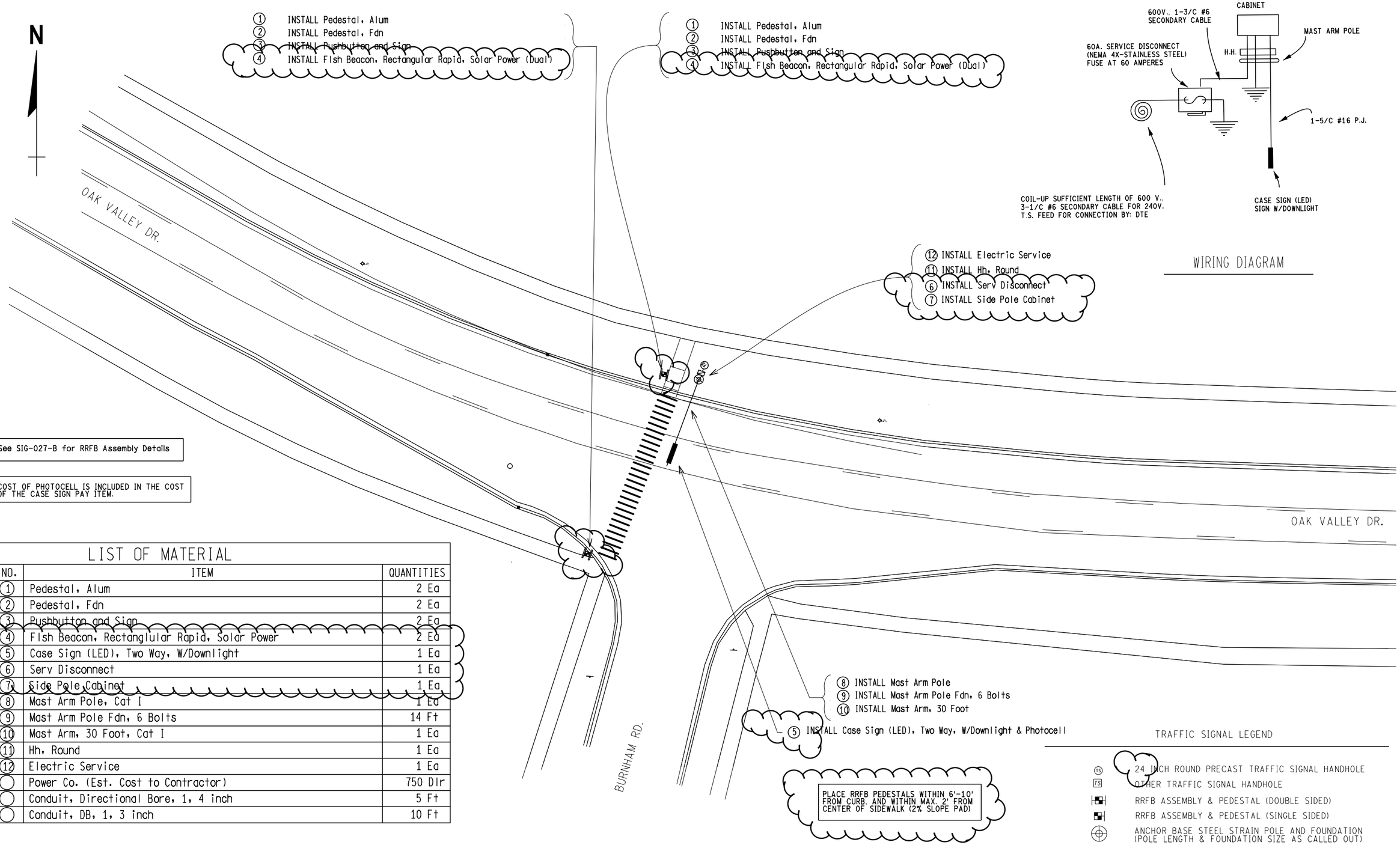

WIRING DIAGRAM

See SIG-027-B for RRFB Assembly Details

COST OF PHOTOCELL IS INCLUDED IN THE COST OF THE CASE SIGN PAY ITEM.

LIST OF MATERIAL

NO.	ITEM	QUANTITIES
①	Pedestal, Alum	2 Ea
②	Pedestal, Fdn	2 Ea
③	Pushbutton and Sign	2 Ea
④	Fish Beacon, Rectanglular Rapid, Solar Power	2 Ea
⑤	Case Sign (LED), Two Way, W/Downlight	1 Ea
⑥	Serv Disconnect	1 Ea
⑦	Side Pole Cabinet	1 Ea
⑧	Mast Arm Pole, Cat I	1 Ea
⑨	Mast Arm Pole Fdn, 6 Bolts	14 Ft
⑩	Mast Arm, 30 Foot, Cat I	1 Ea
⑪	Hh, Round	1 Ea
⑫	Electric Service	1 Ea
◯	Power Co. (Est. Cost to Contractor)	750 Dlr
◯	Conduit, Directional Bore, 1, 4 inch	5 Ft
◯	Conduit, DB, 1, 3 inch	10 Ft

ALL PEDESTALS, MAST ARMS AND HARDWARE SHALL BE PAINTED SATIN BLACK. PAYMENT FOR THIS SHALL BE INCLUDED IN THE AFFECTED PAY ITEMS AND SHALL NOT BE PAID SEPARATELY.

MAST ARM POLE SHALL BE GROUNDED IN THE NEAREST HH. ALL GROUNDS RODS SHALL BE CONNECTED TOGETHER WITH 1-1/C #6 AWG COPPER.

TRAFFIC SIGNAL LEGEND

- TS — 24 INCH ROUND PRECAST TRAFFIC SIGNAL HANDHOLE
- FS — OTHER TRAFFIC SIGNAL HANDHOLE
- RRFB ASSEMBLY & PEDESTAL (DOUBLE SIDED)
- RRFB ASSEMBLY & PEDESTAL (SINGLE SIDED)
- ANCHOR BASE STEEL STRAIN POLE AND FOUNDATION (POLE LENGTH & FOUNDATION SIZE AS CALLED OUT)
- CASE SIGN (1 WAY OR 2 WAY)
- ELECTRIC SERVICE
- CONDUIT, PROPOSED, DIRECT BURIAL
- CONDUIT, PROPOSED, DIRECTIONAL BORED

NO.	DATE	AUTH	DESCRIPTION

Stantec
Stantec
2194 Commons Pk.
Ann Arbor, MI U.S.A.
Tel:734.761.1000
Fax:734.761.1200
www.stantec.com

C & A Engineers
119 Pere Marquette Dr.
Lansing, Michigan 48912 (517) 925-6562
www.caengineers@sbcglobal.net

OAK VALLEY DR AT BURNHAM RD RRFB SHEET

DATE: 10-01-15

JN: PERMIT

SCALE: 1" = 30'

FILE:

DRAWING: SHEET 20

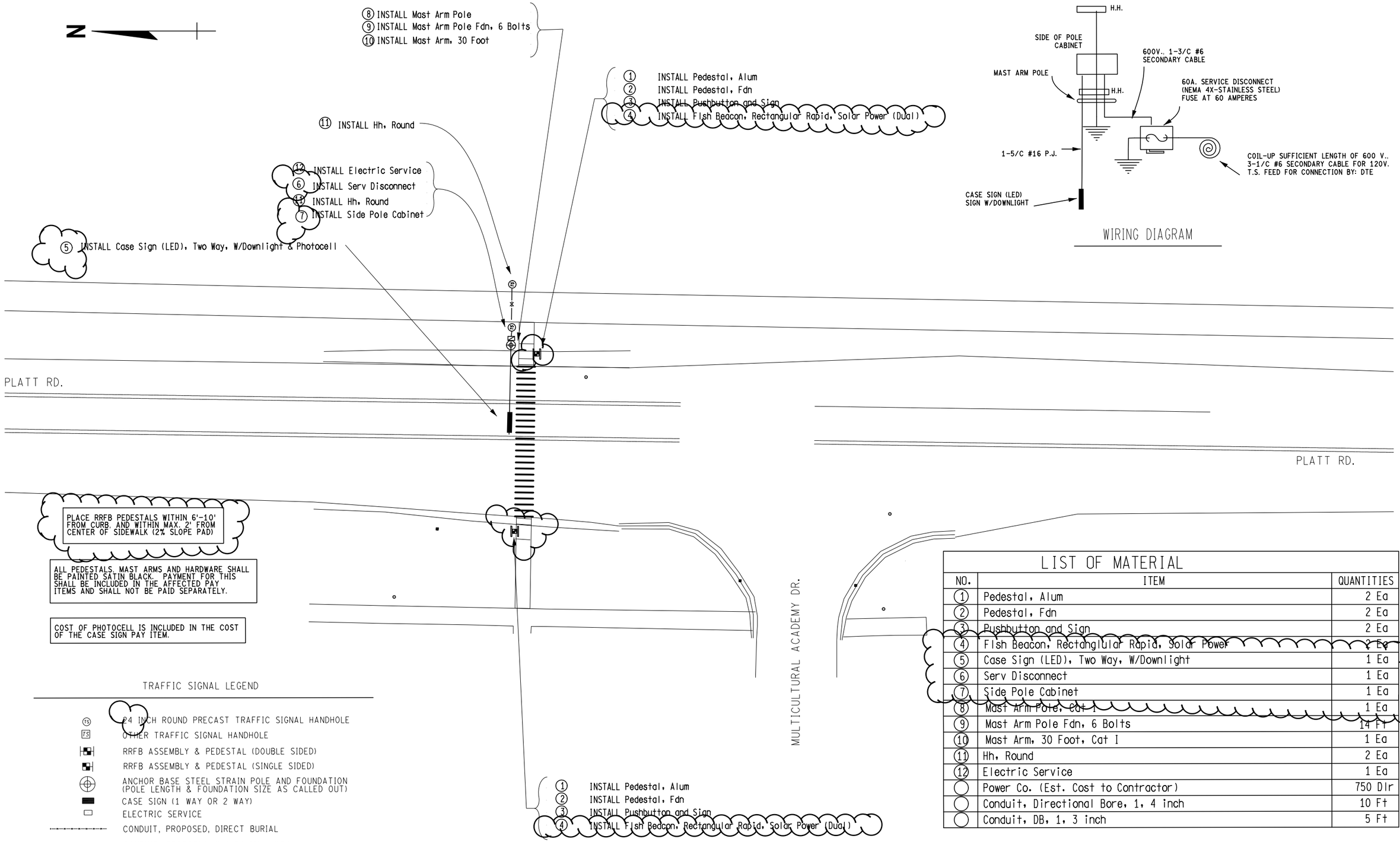

LIST OF MATERIAL

NO.	ITEM	QUANTITIES
1	Pedestal, Alum	2 Ea
2	Pedestal, Fdn	2 Ea
3	Pushbutton and Sign	2 Ea
4	Fish Beacon, Rectanglular Rapid, Solar Power	2 Ea
5	Case Sign (LED), Two Way, W/Downlight	1 Ea
6	Serv Disconnect	1 Ea
7	Side Pole Cabinet	1 Ea
8	Mast Arm Pole, Cat I	1 Ea
9	Mast Arm Pole Fdn, 6 Bolts	14 Ft
10	Mast Arm, 30 Foot, Cat I	1 Ea
11	Hh, Round	2 Ea
12	Electric Service	1 Ea
	Power Co. (Est. Cost to Contractor)	750 Dlr
	Conduit, Directional Bore, 1, 4 inch	10 Ft
	Conduit, DB, 1, 3 inch	5 Ft

NO.	DATE	AUTH	DESCRIPTION

Stantec
Stantec
2194 Seaman Dr.
Jan Arbor, MI U.S.A.
Ph:734.761.1010
Fax:734.761.1020
www.stantec.com

C & A Engineers
119 Pere Marquette Dr.
Lansing, Michigan 48912 (517) 925-6562
www.caengineers@sbcglobal.net

PLATT RD AT MULTICUTURAL ACADEMY DR RRFB SHEET

DATE:10-01-15 JN: PERMIT

FILE: SCALE: 1" = 30'

DRAWING SHEET 21

N

① INSTALL Pedestal, Alum
② INSTALL Pedestal, Fdn
③ INSTALL Pushbutton and Sign
④ INSTALL Fish Beacon, Rectangular Rapid, Solar Power (Dual)

⑤ INSTALL Case Sign (LED), Two Way, W/Downlight & Photocell

⑧ INSTALL Mast Arm Pole
⑨ INSTALL Mast Arm Pole Fdn, 6 Bolts
⑩ INSTALL Mast Arm, 45 Foot

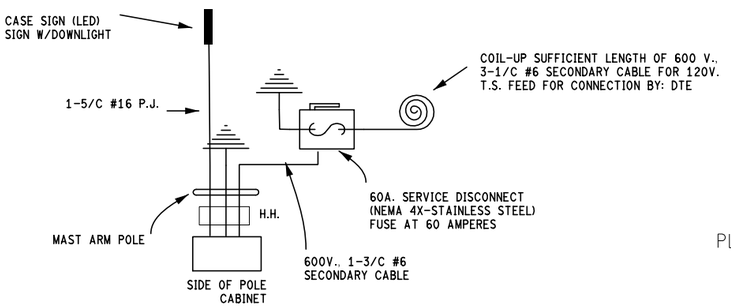

WIRING DIAGRAM

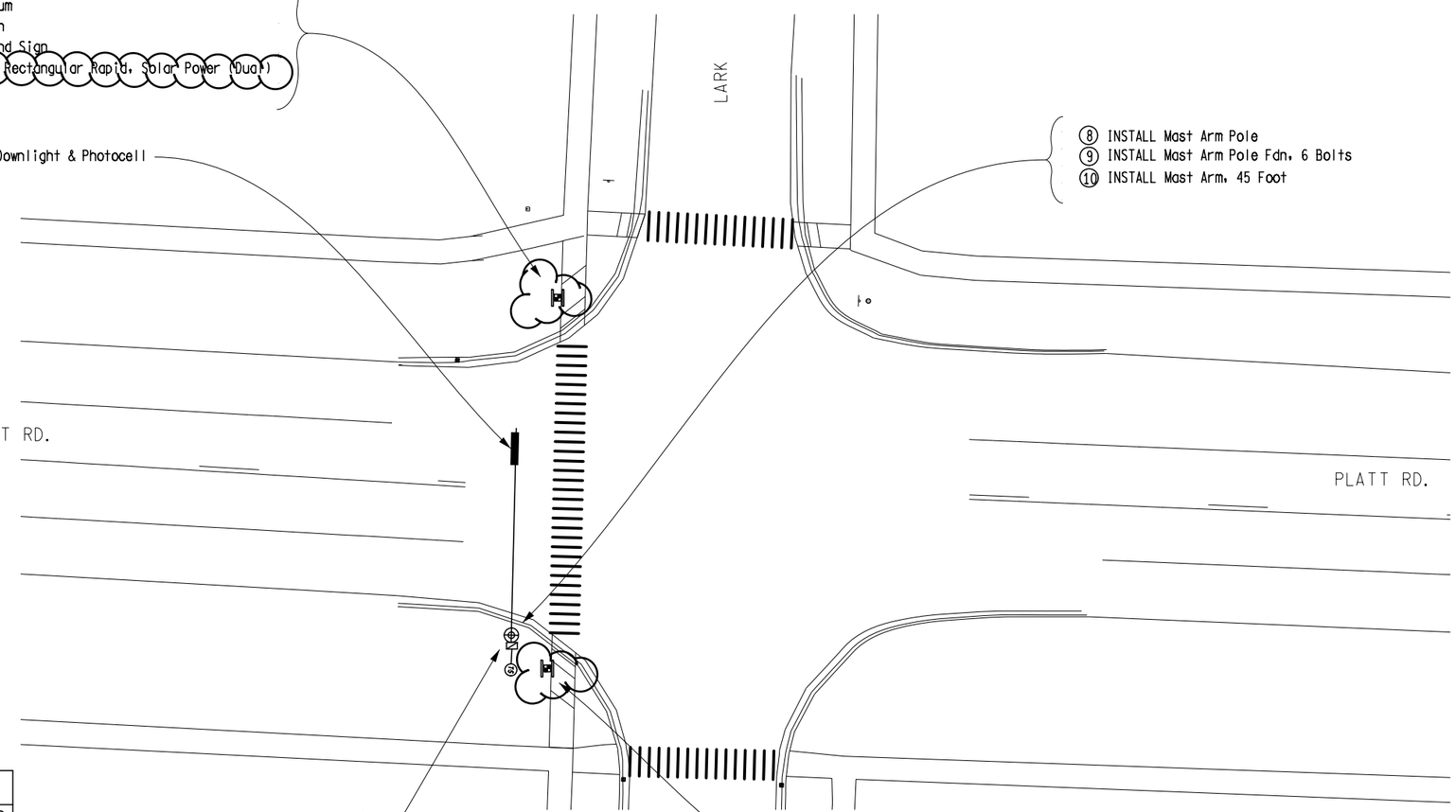

⑫ INSTALL Electric Service
⑥ INSTALL Serv Disconnect
⑪ INSTALL Hh, Round
⑦ INSTALL Side Pole Cabinet

① INSTALL Pedestal, Alum
② INSTALL Pedestal, Fdn
③ INSTALL Pushbutton and Sign
④ INSTALL Fish Beacon, Rectangular Rapid, Solar Power (Dual)

LIST OF MATERIAL

NO.	ITEM	QUANTITIES
①	Pedestal, Alum	2 Ea
②	Pedestal, Fdn	2 Ea
③	Pushbutton and Sign	2 Ea
④	Fish Beacon, Rectanglular Rapid, Solar Power	2 Ea
⑤	Case Sign (LED), Two Way, W/Downlight	1 Ea
⑥	Serv Disconnect	1 Ea
⑦	Side Pole Cabinet	1 Ea
⑧	Mast Arm Pole, Cat I	1 Ea
⑨	Mast Arm Pole Fdn, 6 Bolts	14 Ft
⑩	Mast Arm, 45 Foot, Cat I	1 Ea
⑪	Hh, Round	1 Ea
⑫	Electric Service	1 Ea
◯	Power Co. (Est. Cost to Contractor)	500 Dlr
◯	Conduit, Directional Bore, 1, 4 inch	10 Ft
◯	Conduit, DB, 1, 3 inch	5 Ft

PLACE RRFB PEDESTALS WITHIN 6'-10' FROM CURB, AND WITHIN MAX. 2' FROM CENTER OF SIDEWALK (2% SLOPE PAD)

COST OF PHOTOCELL IS INCLUDED IN THE COST OF THE CASE SIGN PAY ITEM.

ALL PEDESTALS, MAST ARMS AND HARDWARE SHALL BE PAINTED SATIN BLACK. PAYMENT FOR THIS SHALL BE INCLUDED IN THE AFFECTED PAY ITEMS AND SHALL NOT BE PAID SEPARATELY.

TRAFFIC SIGNAL LEGEND

- 24 INCH ROUND PRECAST TRAFFIC SIGNAL HANDHOLE
- OTHER TRAFFIC SIGNAL HANDHOLE
- RRFB ASSEMBLY & PEDESTAL (DOUBLE SIDED)
- RRFB ASSEMBLY & PEDESTAL (SINGLE SIDED)
- ANCHOR BASE STEEL STRAIN POLE AND FOUNDATION (POLE LENGTH & FOUNDATION SIZE AS CALLED OUT)
- CASE SIGN (1 WAY OR 2 WAY)
- ELECTRIC SERVICE
- CONDUIT, PROPOSED, DIRECT BURIAL
- CONDUIT, PROPOSED, DIRECTIONAL BORED

NO.	DATE	AUTH	DESCRIPTION

Stantec
Stantec
27174 Bouchard Dr.
Warren, MI 48092
Ph:(586) 781-1000
Fax:(586) 781-1200
www.stantec.com

C & A Engineers
C & A Engineers
119 Pierce Marquette Dr.
Lansing, Michigan 48912 (517) 925-6562
www.cdaeng.com/ (cacoeng@merit.com)

PLATT RD AT LARK/HIDDEN CREEK RRFB SHEET

DATE:10-01-15 | JN: PERMIT

FILE: | SCALE: 1" = 30'

DRAWING SHEET 22

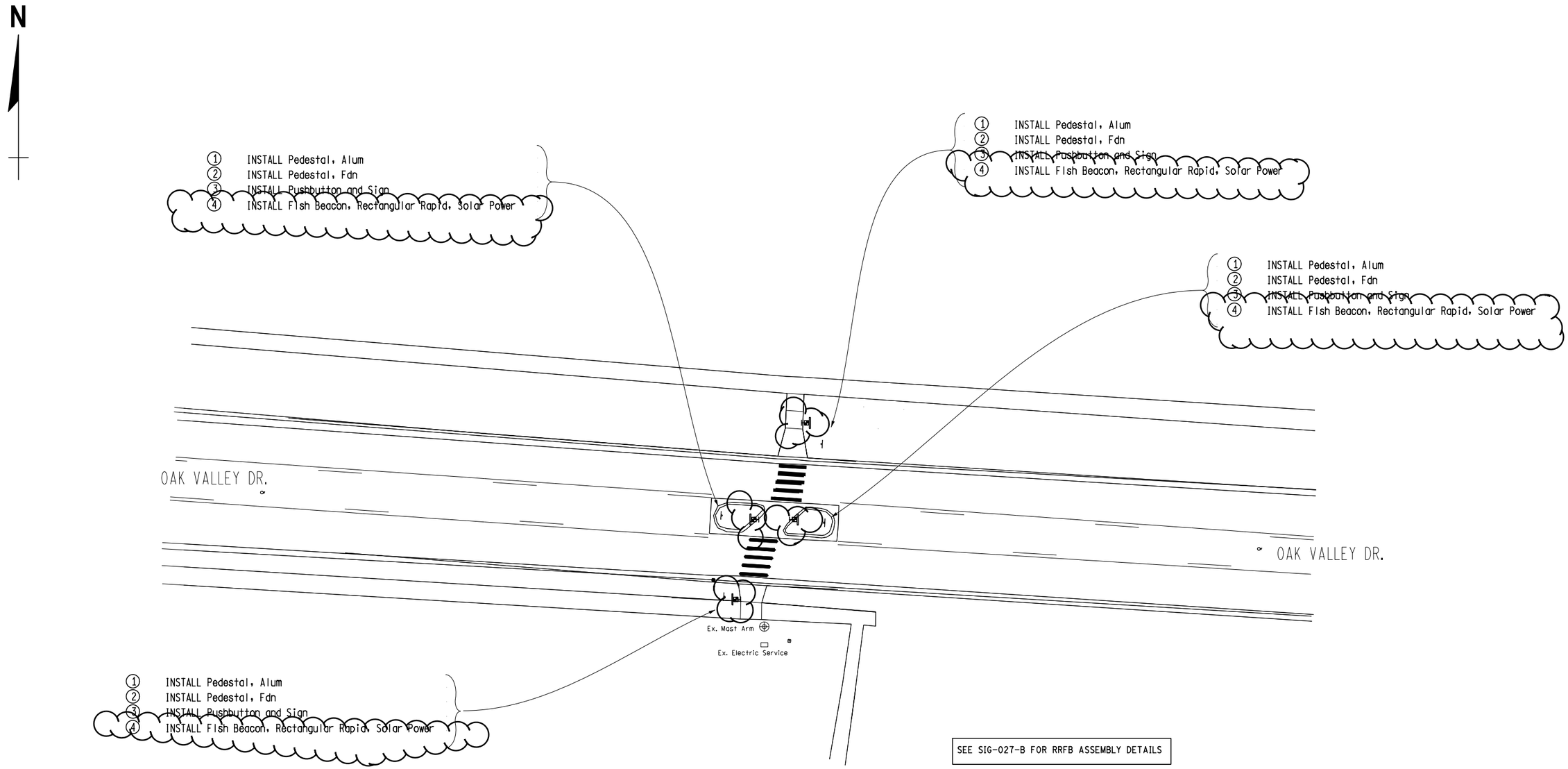

SEE SIG-027-B FOR RRFB ASSEMBLY DETAILS

PLACE RRFB PEDESTALS WITHIN 6'-10' FROM CURB, AND WITHIN MAX. 2' FROM CENTER OF SIDEWALK (2% SLOPE PAD)

ALL PEDESTALS, MAST ARMS AND HARDWARE SHALL BE PAINTED SATIN BLACK. PAYMENT FOR THIS SHALL BE INCLUDED IN THE AFFECTED PAY ITEMS AND SHALL NOT BE PAID SEPARATELY.

LIST OF MATERIAL

NO.	ITEM	QUANTITIES
1	Pedestal, Alum	4 Ea
2	Pedestal, Fdn	4 Ea
3	Pushbutton and Sign	4 Ea
4	Fish Beacon, Rectanglular Rapid, Solar Power	4 Ea

TRAFFIC SIGNAL LEGEND

- 24 INCH ROUND PRECAST TRAFFIC SIGNAL HANDHOLE
- OTHER TRAFFIC SIGNAL HANDHOLE
- RRFB ASSEMBLY & PEDESTAL (DOUBLE SIDED)
- RRFB ASSEMBLY & PEDESTAL (SINGLE SIDED)
- ANCHOR BASE STEEL STRAIN POLE AND FOUNDATION (POLE LENGTH & FOUNDATION SIZE AS CALLED OUT)
- CASE SIGN (1 WAY OR 2 WAY)
- ELECTRIC SERVICE
- CONDUIT, PROPOSED, DIRECT BURIAL
- CONDUIT, PROPOSED, DIRECTIONAL BORED

NO.	DATE	AUTH	DESCRIPTION

Stantec
Stantec
2194 Newmarket Pkwy.
Suite 100
San Jose, CA U.S.A.
Ph:(234.701.1000
Fax:(234.701.1200
www.stantec.com

C & A Engineers
C & A Engineers
119 Park Wrightsville Dr.
Wrightsville, Wisconsin 53562 (517) 925-6362
www.caengineers.com (caacoung@inwarp.net)

OAK VALLEY DR E. OF ARBOR HOSPICE DR RRFB SHEET

DATE:10-01-15 JN: PERMIT

FILE: SCALE: 1" = 30'

DRAWING SHEET 23

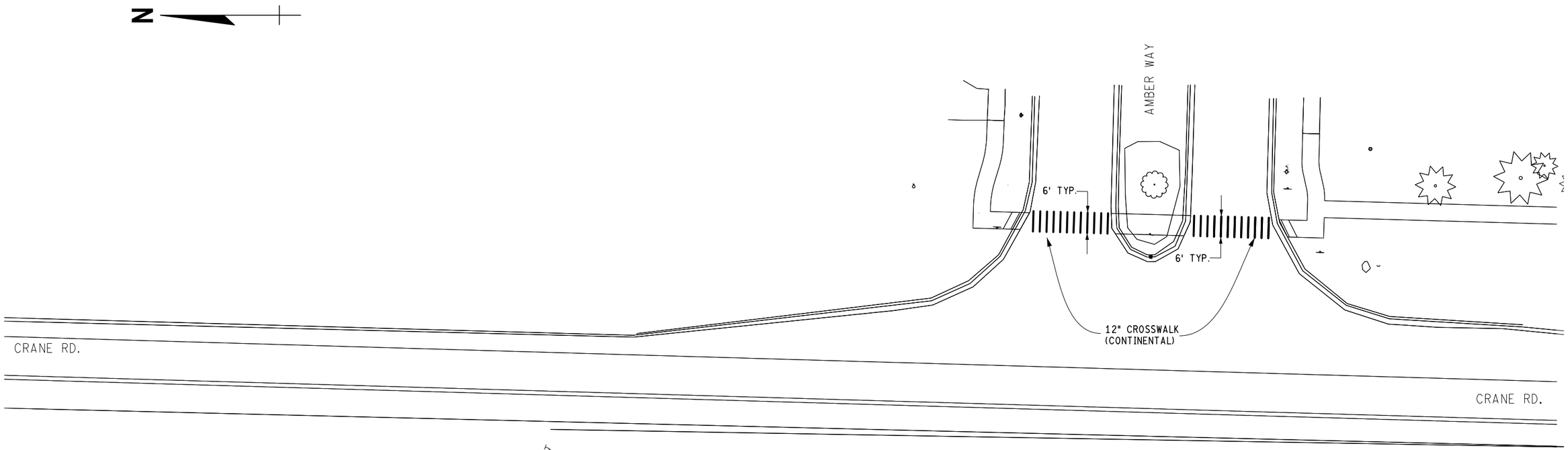

(PLACE SIGNS & SUPPORTS 140' NORTH OF AMBER WAY)

QUANTITIES THIS SHEET

12	Sft	Sign, Type IIIB
14	Ft	Post, Steel, 3 lb
48	Ft	Pav't Mrkg, Polyurea, 12 inch, Crosswalk

PERMANENT SIGNING & PAVEMENT MARKINGS

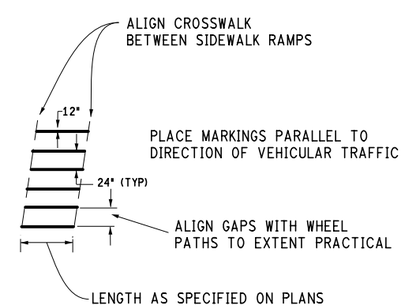

CONTINENTAL CROSSWALK DETAIL

NO.	DATE	AUTH	DESCRIPTION

Stantec
Stantec
2594 Renaissance Blvd.
San Antonio, TX U.S.A.
Tel:(254.761.1000
Fax:(254.761.1200
www.stantec.com

C & A Engineers
119 Pere Marquette Dr.
Lincoln, Illinois 62656
(217) 935-8362
www.caengineer1@inwell.com

CRANE RD. AT AMBER WAY SIGNING/PAV'T MARKING

DATE:10-01-15

JN: PERMIT

FILE:

SCALE: 1" = 30'

DRAWING SHEET 24

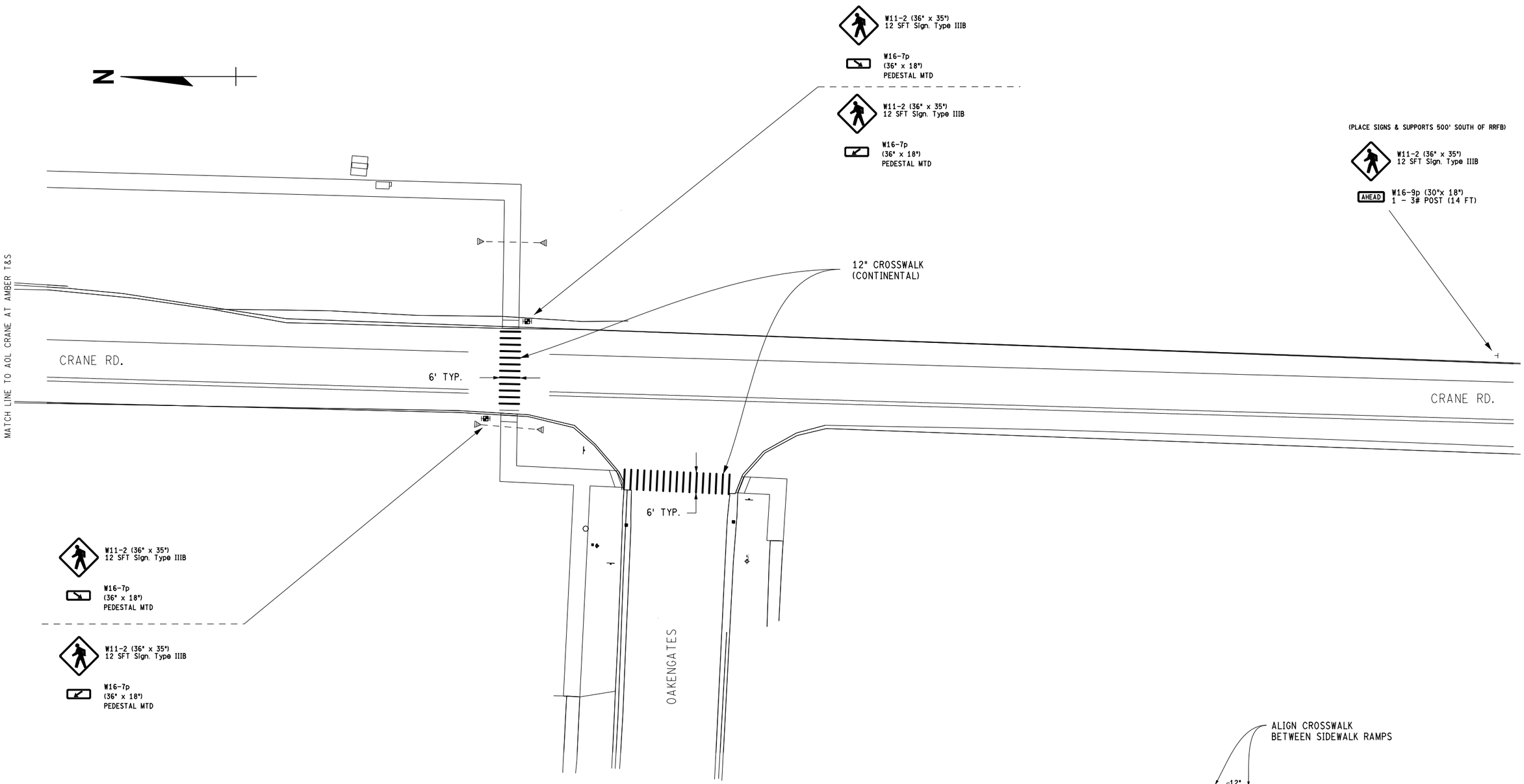

QUANTITIES THIS SHEET

60	Sft	Sign, Type IIIB
55	Ft	Pav't Mrkg, Polyurea, 12 inch, Crosswalk
28	Ft	Post, Steel, 3 lb

PERMANENT SIGNING & PAVEMENT MARKINGS

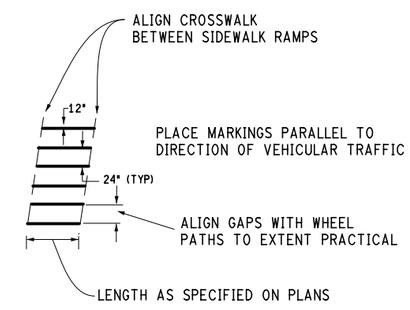

CONTINENTAL CROSSWALK DETAIL

NO.	DATE	AUTH	DESCRIPTION

Stantec
Stantec
2204 Resource Dr.
San Angelo, TX U.S.A.
Ph:(325) 701-1000
Fax:(325) 701-1020
www.stantec.com

C & A Engineers
119 Pine Marquette Dr.
Longmont, Colorado 80512 (970) 925-6362
www.caengineering@mediacom.com

CRANE RD. AT OAKENGATES SIGNING/PAV'T MARKING

DATE:10-01-15 JN: PERMIT

FILE: SCALE: 1" = 30'

DRAWING SHEET 25

N

2 — Sign, Type III, Rem & Supports

2 — W11-2 (36" x 35")
12 SFT Sign, Type IIIB

AHEAD W16-9p
(36" x 18")
PEDESTAL MTD

REMOVE AND REPLACE BOTH ADVANCE WARNING SIGNS SOUTH (500') AND NORTH (285') OF THE EXISTING CROSSING

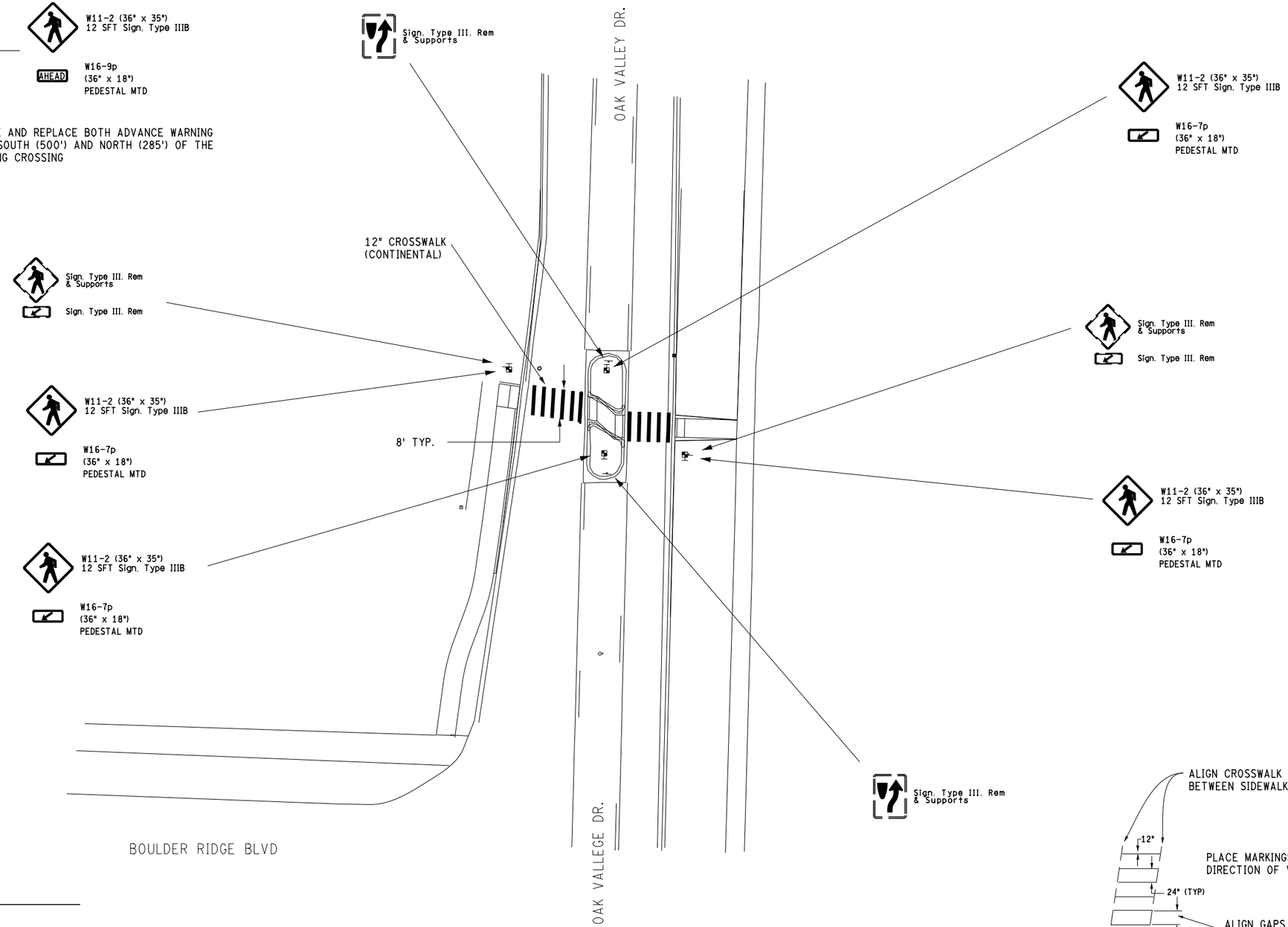

QUANTITIES THIS SHEET

4	Ea	Sign, Type III, Rem
48	Sft	Sign, Type IIIB
24	Ft	Spec, Pav't Mrkg, Rem
24	Ft	Pav't Mrkg, Polyurea, 12 Inch, Crosswalk

PERMANENT SIGNING & PAVEMENT MARKINGS

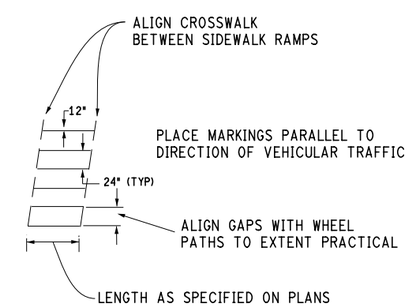

CONTINENTAL CROSSWALK DETAIL

NO.	DATE	AUTH	DESCRIPTION

Stantec
Stantec
2794 Renaissance Blvd.
King of Prussia, PA U.S.A.
Tel:(204.701.1000
Fax:(204.701.1200
www.stantec.com

C & A Engineers
119 Pine Marquette Dr.
Lawrenceville, Georgia 30012 (571) 925-8362
www.caengineers@mail.com

OAK VALLEY DR AT BOULDER RIDGE SIGNING/PAV'T MARKING

DATE:10-01-15 JN: PERMIT

FILE: SCALE: 1" = 30'

DRAWING SHEET 26

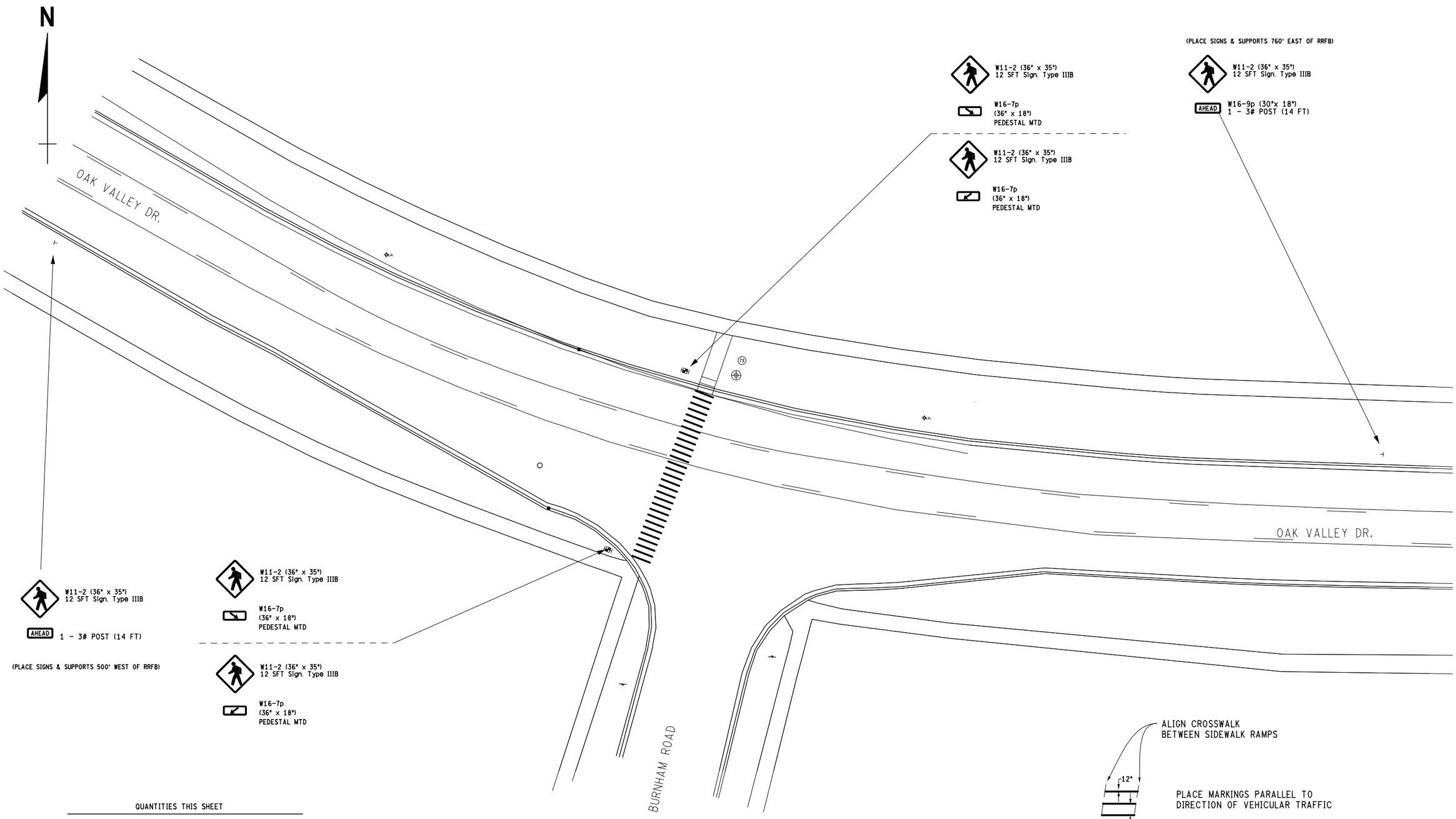

QUANTITIES THIS SHEET

72	Sft	Sign, Type IIIB
67	Ft	Pav't Mrkg, Polyurea, 12 Inch, Crosswalk
28	Ft	Post, Steel, 3 lb

PERMANENT SIGNING & PAVEMENT MARKINGS

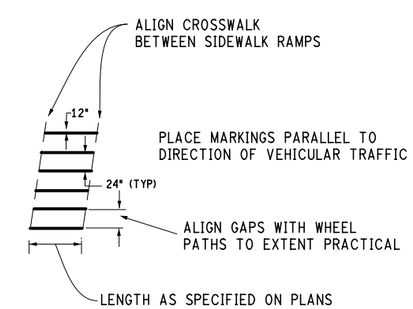

CONTINENTAL CROSSWALK DETAIL

NO.	DATE	AUTH	DESCRIPTION

Stantec
Stantec
2594 Seaborg Dr.
San Jose, CA U.S.A.
Ph:(924.701.1000
Fax:(924.701.1200
www.stantec.com

C & A Engineers
119 Pine Marquette Dr.
Lombard, Illinois 60148
(571) 925-8362
www.caengineering@mail.com

OAK VALLEY DR AT BURNHAM RD SIGNING/PAV'T MARKING

DATE:10-01-15

JN: PERMIT

FILE:

SCALE: 1" = 30'

DRAWING SHEET 27

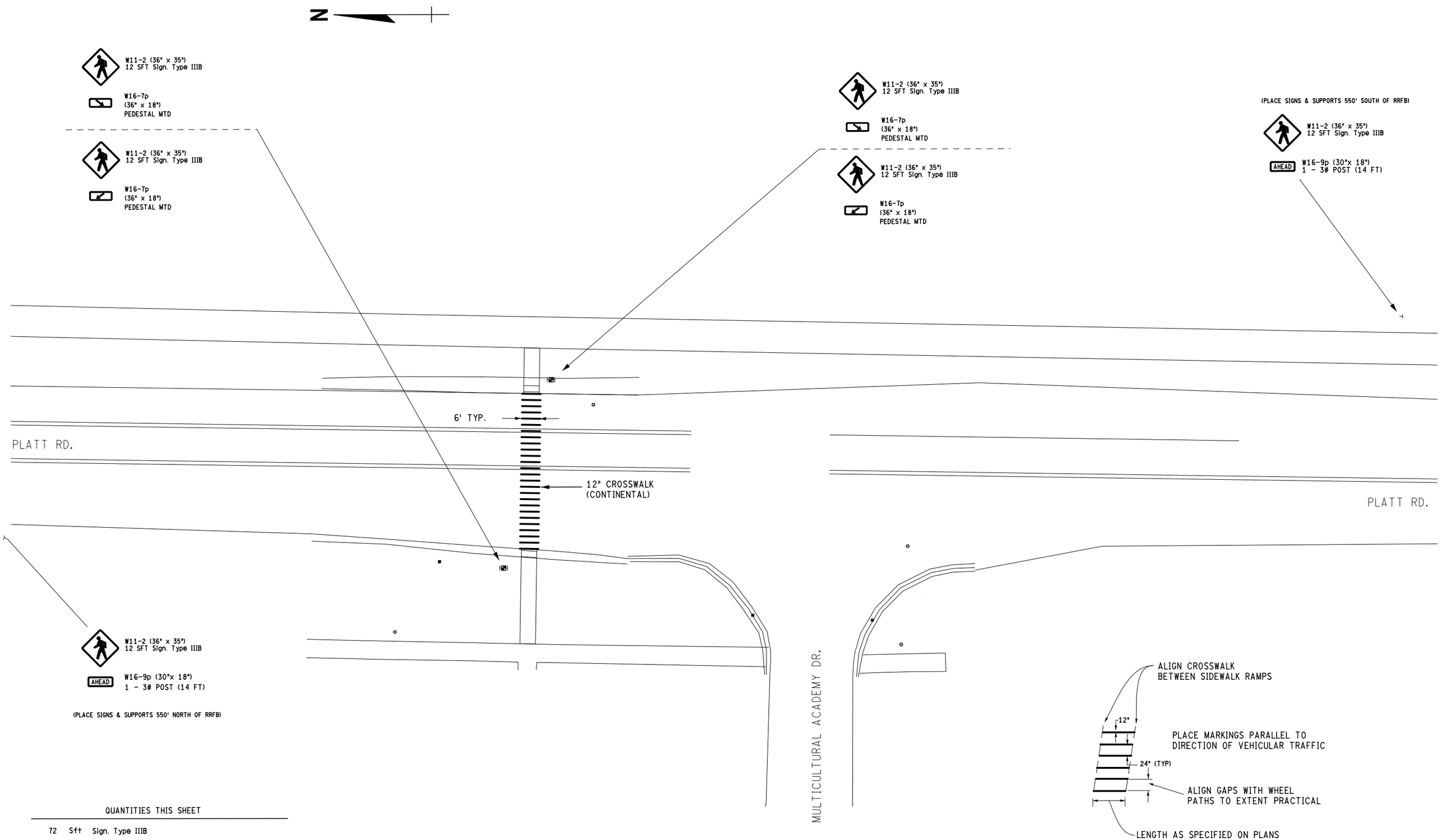

QUANTITIES THIS SHEET

72	Sft	Sign, Type IIIB
50	Ft	Pav't Mrkg, Polyurea, 12 inch, Crosswalk
28	Ft	Post, Steel, 3 lb

PERMANENT SIGNING & PAVEMENT MARKINGS

CONTINENTAL CROSSWALK DETAIL

NO.	DATE	AUTH	DESCRIPTION

Stantec
Stantec
2794 Raymore Dr.
San Angelo, TX U.S.A.
Tel:325.701.1000
Fax:325.701.1200
www.stantec.com

C & A Engineers
119 Pine Marquette Dr.
Lombard, Illinois 60148
(571) 925-6562
www.caengineers@comcast.net

PLATT RD AT MULTICUTURAL ACADEMY DR SIGNING/PAV'T MARKING

JN: PERMIT

DATE:10-01-15

SCALE: 1" = 30'

FILE:

DRAWING SHEET 28

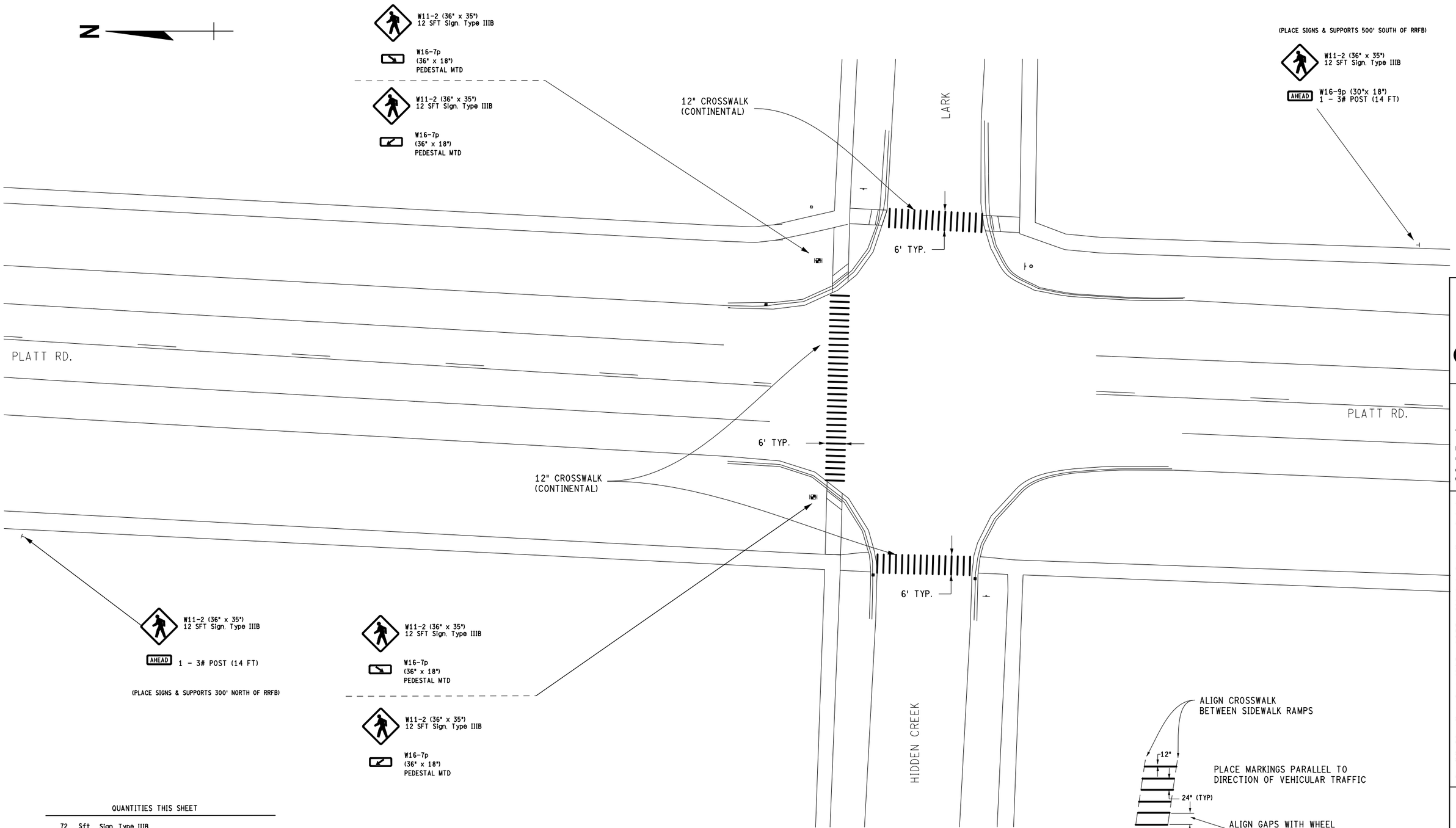

PERMANENT SIGNING & PAVEMENT MARKINGS

CONTINENTAL CROSSWALK DETAIL

QUANTITIES THIS SHEET

72	Sft	Sign, Type IIIB
120	Ft	Pav't Mrkg, Polyurea, 12 inch, Crosswalk
28	Ft	Post, Steel, 3 lb

NO.	DATE	AUTH	DESCRIPTION

Stantec
Stantec
2794 Raymore Dr.
San Angelo, TX U.S.A.
Tel:(325) 701-1000
Fax:(325) 701-1200
www.stantec.com

C & A Engineers
119 Fore Marquette Dr.
Longview, Illinois 61812 (571) 925-6362
www.caengineering@mediacomcc.com

PLATT RD AT LARK/HIDDEN CREEK SIGNING/PAV'T MARKING

DATE:10-01-15 JN: PERMIT

FILE: SCALE: 1" = 30'

DRAWING SHEET 29

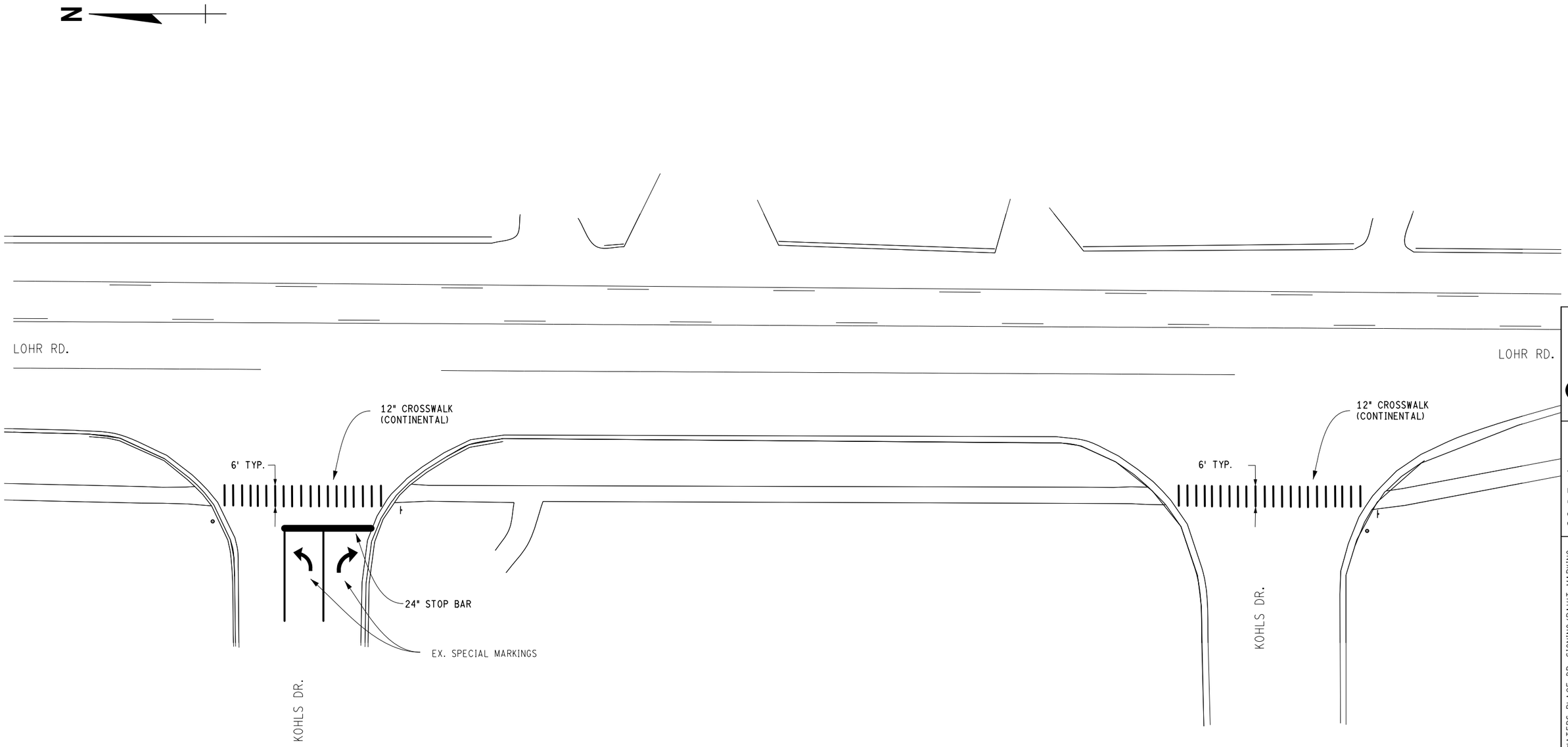

QUANTITIES THIS SHEET

150	Ft	Spec, Pav't Mrkg, Rem
30	Ft	Pav't Mrkg, Polyurea, 24 inch, Stop Bar
120	Ft	Pav't Mrkg, Polyurea, 12 inch, Crosswalk

PERMANENT SIGNING & PAVEMENT MARKINGS

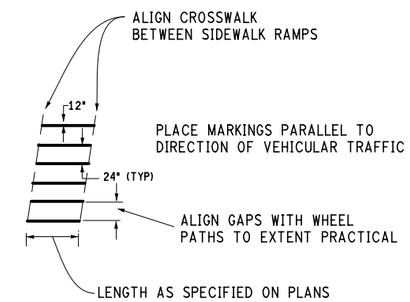

CONTINENTAL CROSSWALK DETAIL

NO.	DATE	AUTH	DESCRIPTION

Stantec
Stantec
2534 Reserve Dr.
San Jose, CA U.S.A.
Tel:(924.701.1000
Fax:(924.701.1000
www.stantec.com

C & A Engineers
119 Pine Marquette Dr.
Lombard, Illinois 60148
(571) 925-8362
www.caengineering@mail.com

LOHR RD AT KOHLS/WATERS PLACE DR. SIGNING/PAV'T MARKING

DATE:10-01-15 JN: PERMIT

FILE: SCALE: 1" = 30'

DRAWING SHEET 30

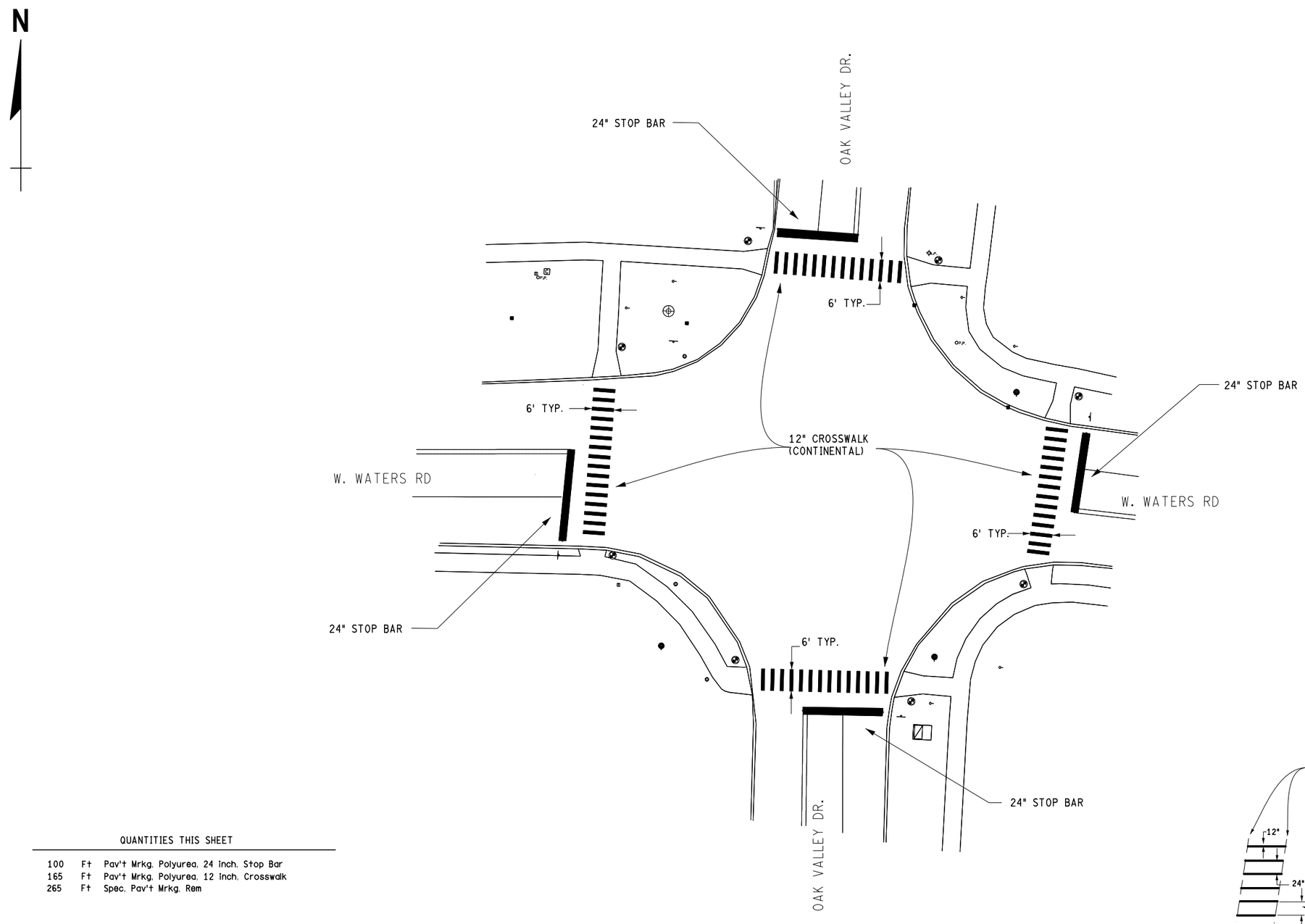

PERMANENT SIGNING & PAVEMENT MARKINGS

QUANTITIES THIS SHEET

100	Ft	Pav't Mrkg, Polyurea, 24 inch, Stop Bar
165	Ft	Pav't Mrkg, Polyurea, 12 inch, Crosswalk
265	Ft	Spec, Pav't Mrkg, Rem

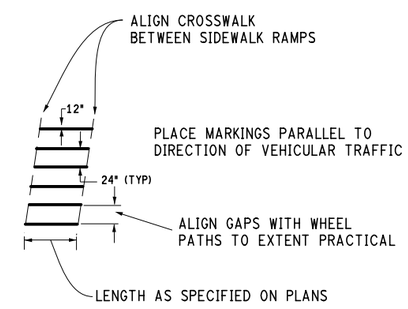

CONTINENTAL CROSSWALK DETAIL

NO.	DATE	AUTH	DESCRIPTION

Stantec
Stantec
2594 Seaborg Dr.
San Ardo, CA 93450
Ph:(559) 791-1000
Fax:(559) 791-1030
www.stantec.com

C & A Engineers
119 Pine Marquette Dr.
Lompoc, California 93412 (5171) 925-6362
www.cacorp@inter1.com

OAK VALLEY DR AT WATER RD SIGNING/PAV'T MARKING

DATE:10-01-15 JN: PERMIT

FILE: SCALE: 1" = 30'

DRAWING SHEET 31

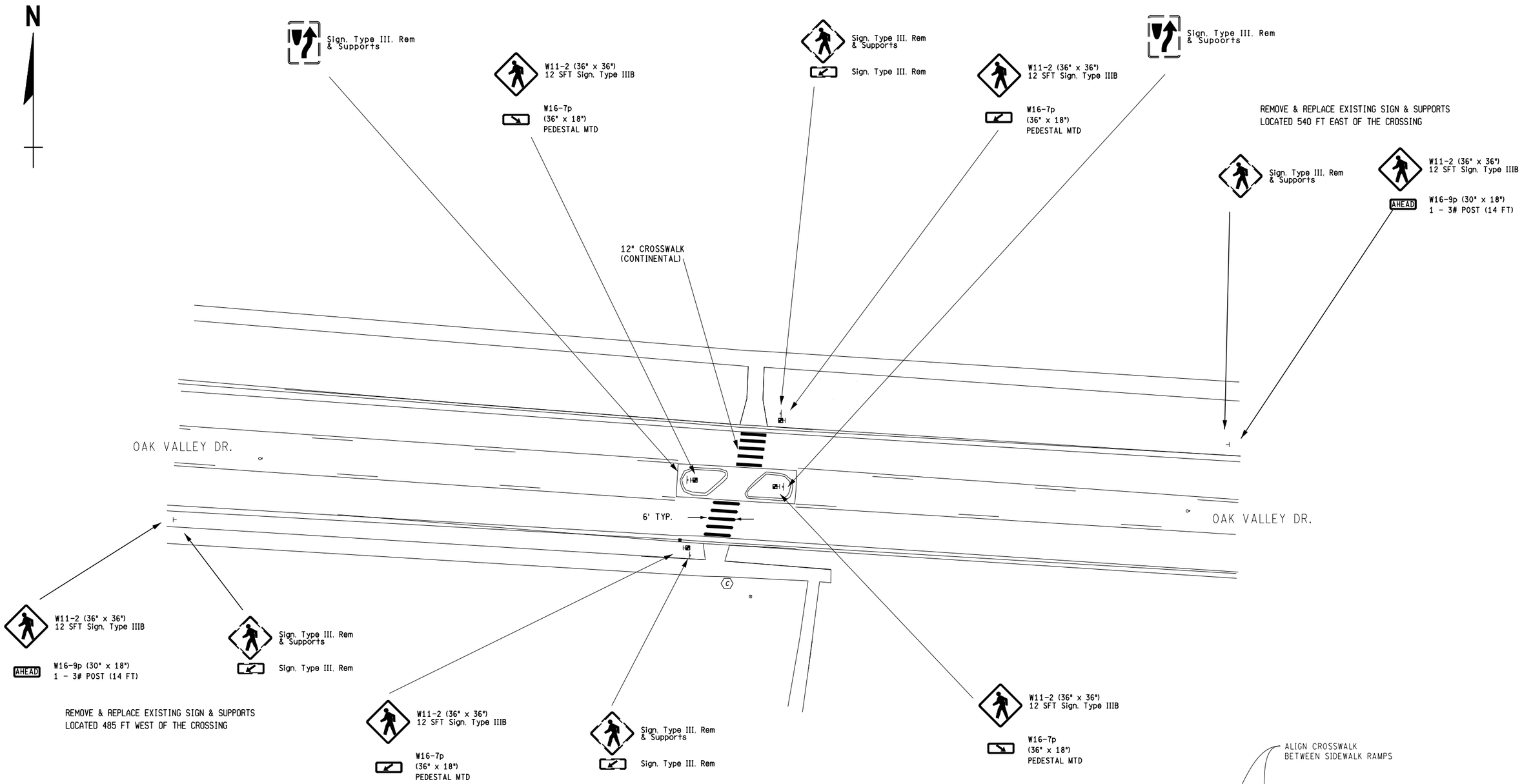

QUANTITIES THIS SHEET

8	Ea	Sign, Type III, Rem
72	Sft	Sign, Type IIIB
24	Ft	Spec, Pav't Mrkg, Rem
24	Ft	Pav't Mrkg, Polyurea, 12 inch, Crosswalk
28	Ft	Post, Steel, 3 lb

PERMANENT SIGNING & PAVEMENT MARKINGS

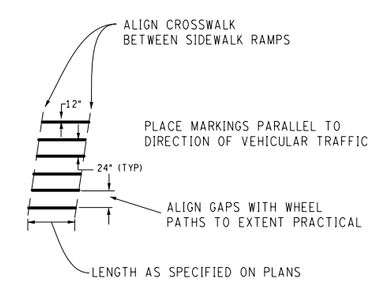

CONTINENTAL CROSSWALK DETAIL

NO.	DATE	AUTH	DESCRIPTION

Stantec
Stantec
3774 Broadway St.
San Antonio, TX U.S.A.
Ph:(210) 701-1000
Fx:(210) 701-1030
www.stantec.com

C & A Engineers
119 Pere Marquette Dr.
Lansing, Michigan 48912 (517) 925-8362
www.caengineers.com | caengineers@sbcglobal.net

OAK VALLEY DR E. OF ARBOR HOSPICE DR SIGNING/PAV'T MARKING

JN: PERMIT

DATE: 10-01-15

SCALE: 1" = 30'

FILE:

DRAWING SHEET 32

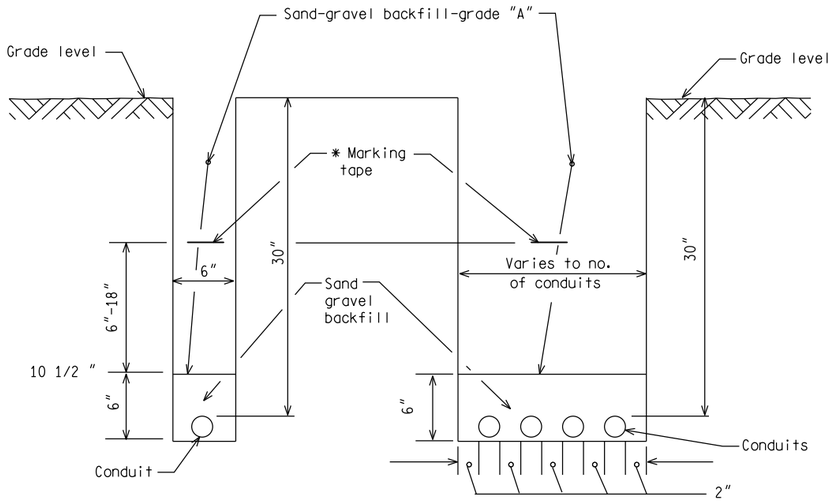

*NOTE:
Marking tape shall have proper logo as supplied by the Engineer and installed by the Contractor.

DIRECT BURIAL CONDUIT(S)/CABLE(S)

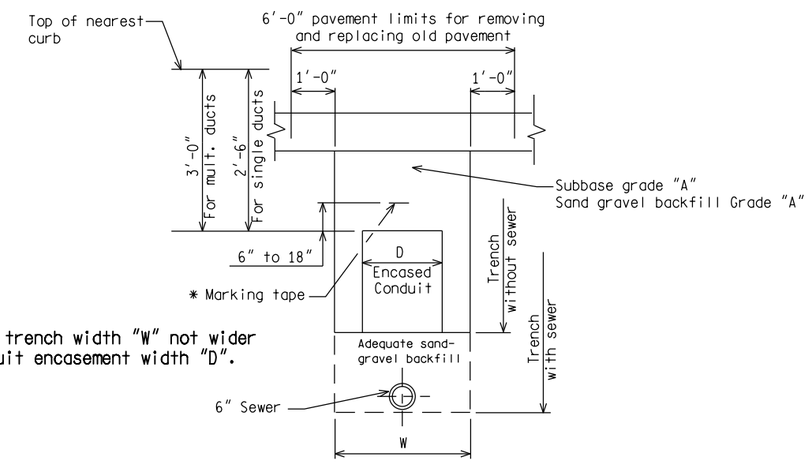

NOTE:
Preferred trench width "W" not wider than conduit encasement width "D".

TYPICAL SECTION OF TRENCH

ENCASED CONDUIT

NOT TO SCALE

File: PW:RD/T&S/Standards/Signals/mdot sig023a.dgn Rev. 11/25/08

MDOT Michigan Department of Transportation

PREPARED BY TRAFFIC AND SAFETY

DRAWN BY: DJF

CHECKED BY:

ENGINEER OF DELIVERY

ENGINEER OF DEVELOPMENT

(SPECIAL DETAIL)

FHWA APPROVAL DATE

MICHIGAN DEPARTMENT OF TRANSPORTATION
BUREAU OF HIGHWAYS DELIVERY STANDARD PLAN FOR

CONDUIT
(DIRECT BURIAL/ENCASED)

PLAN DATE | SIG-023-A | SHEET 1 of 2

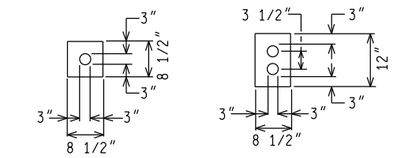

1 2" CONDUIT 2 2" CONDUIT

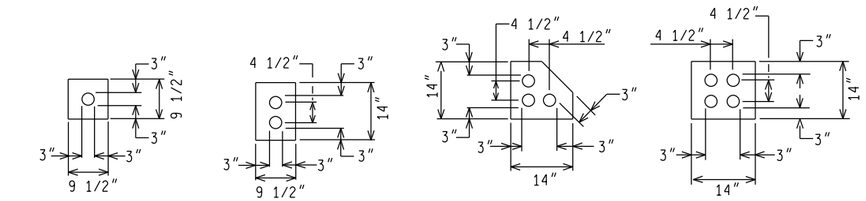

ONE 2 1/2" CONDUIT TWO 2 1/2" CONDUIT THREE 2 1/2" CONDUIT FOUR 2 1/2" CONDUIT

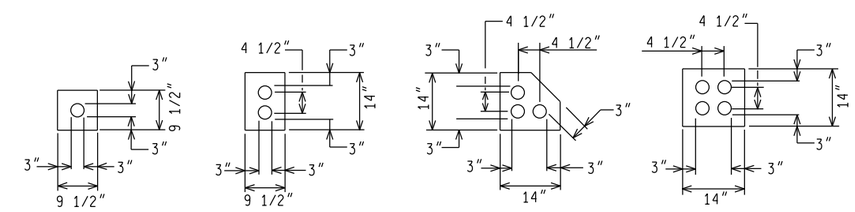

1 3" CONDUIT 2 3" CONDUIT 3 3" CONDUIT 4 3" CONDUIT

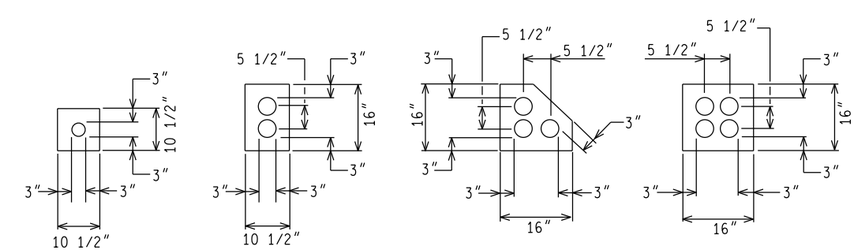

1 4" CONDUIT 2 4" CONDUIT 3 4" CONDUIT 4 4" CONDUIT

ENCASED CONDUIT SECTIONS

NOT TO SCALE

MICHIGAN DEPARTMENT OF TRANSPORTATION
BUREAU OF HIGHWAYS DELIVERY STANDARD PLAN

(SPECIAL DETAIL)
FHWA APPROVAL DATE

File: PW:RD/T&S/Standards/Signals/mdot sig023a.dgn Rev. 11/25/08

PLAN DATE | SIG-023-A | SHEET 2 of 2

AS-LET PLAN REVISIONS							
NO.	DATE	AUTH	DESCRIPTION	NO.	DATE	AUTH	DESCRIPTION

MDOT Michigan Department of Transportation

FILE:

DATE: 10-01-15
DESIGN UNIT:
TSC:

CS:
JN: PERMIT

SIGNAL STANDARD DETAIL SHEETS
AOL ROAD CROSSING
PITTSFIELD TOWNSHIP, WASHENAW COUNTY

DRAWING | SHEET 33

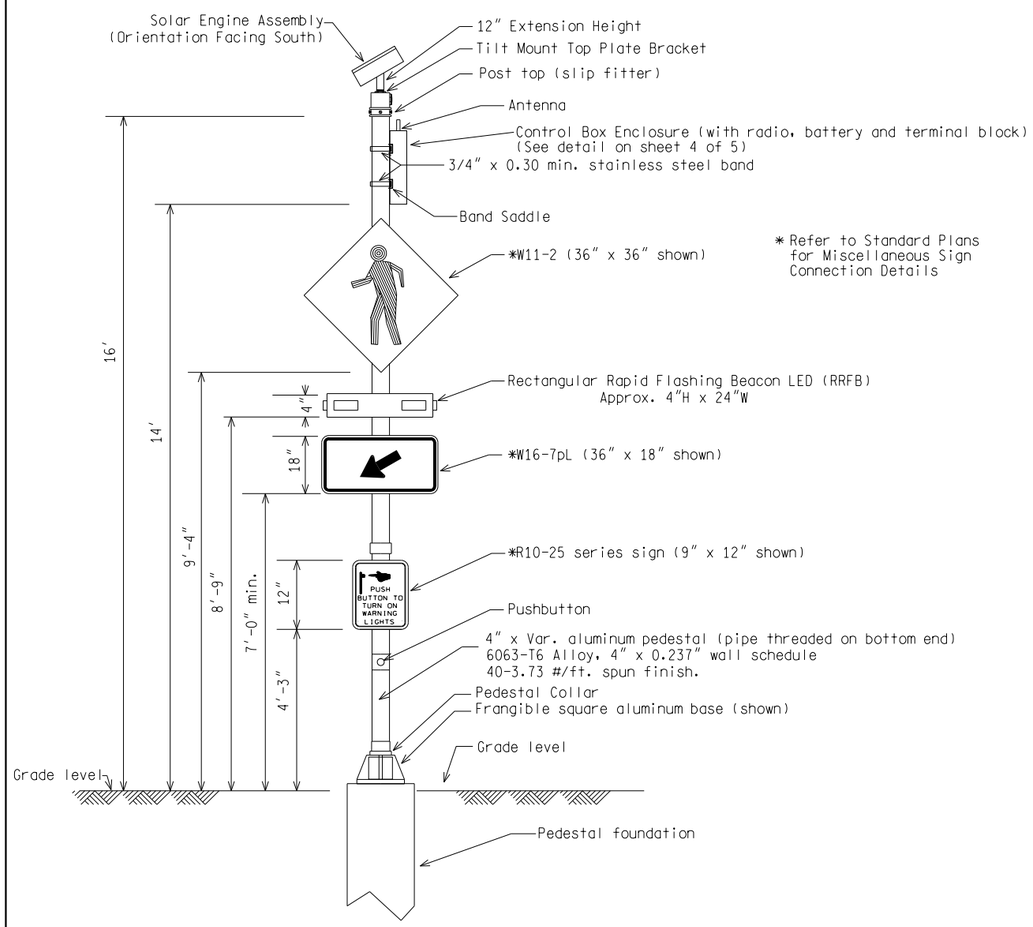

FRONT VIEW

SOLAR POWER ASSEMBLY (ONE-SIDED RRFB)

NOT TO SCALE

File:PW:RD/TR/Signals/Web/Statewide SD/Final Rev. 09/17/13

MDOT Michigan Department of Transportation

PREPARED BY TRAFFIC AND SAFETY

DRAWN BY:

CHECKED BY:

ENGINEER OF DELIVERY

ENGINEER OF DEVELOPMENT

(SPECIAL DETAIL)

FHWA APPROVAL DATE

MICHIGAN DEPARTMENT OF TRANSPORTATION
BUREAU OF HIGHWAYS DELIVERY STANDARD PLAN FOR

RECTANGULAR RAPID FLASHING BEACON

PLAN DATE

SIG-027-B

SHEET 1 of 5

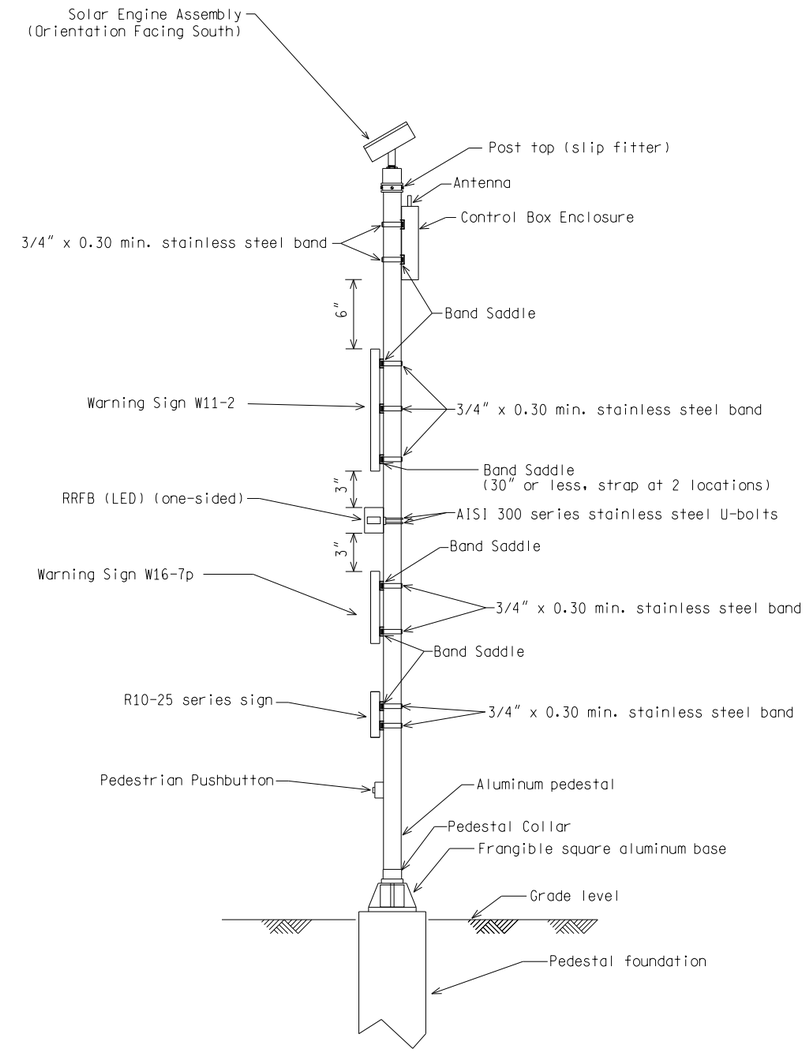

SIDE VIEW

SOLAR POWER ASSEMBLY (ONE-SIDED RRFB)

NOT TO SCALE

MICHIGAN DEPARTMENT OF TRANSPORTATION
BUREAU OF HIGHWAYS DELIVERY STANDARD PLAN

(SPECIAL DETAIL)

FHWA APPROVAL DATE

File:

Rev. 09/17/13

PLAN DATE

SIG-027-B

SHEET 2 of 5

10-01-15

SIGNAL STANDARD DETAIL SHEETS
AOL ROAD CROSSING
PITTSFIELD TOWNSHIP, WASHENAW COUNTY

AS-LET PLAN REVISIONS							
NO.	DATE	AUTH	DESCRIPTION	NO.	DATE	AUTH	DESCRIPTION
33							

MDOT Michigan Department of Transportation

FILE:

DATE: 10-01-15

DESIGN UNIT:

TSC:

CS:

JN: PERMIT

SIGNAL STANDARD DETAIL SHEETS
AOL ROAD CROSSING
PITTSFIELD TOWNSHIP, WASHENAW COUNTY

DRAWING

SHEET 34

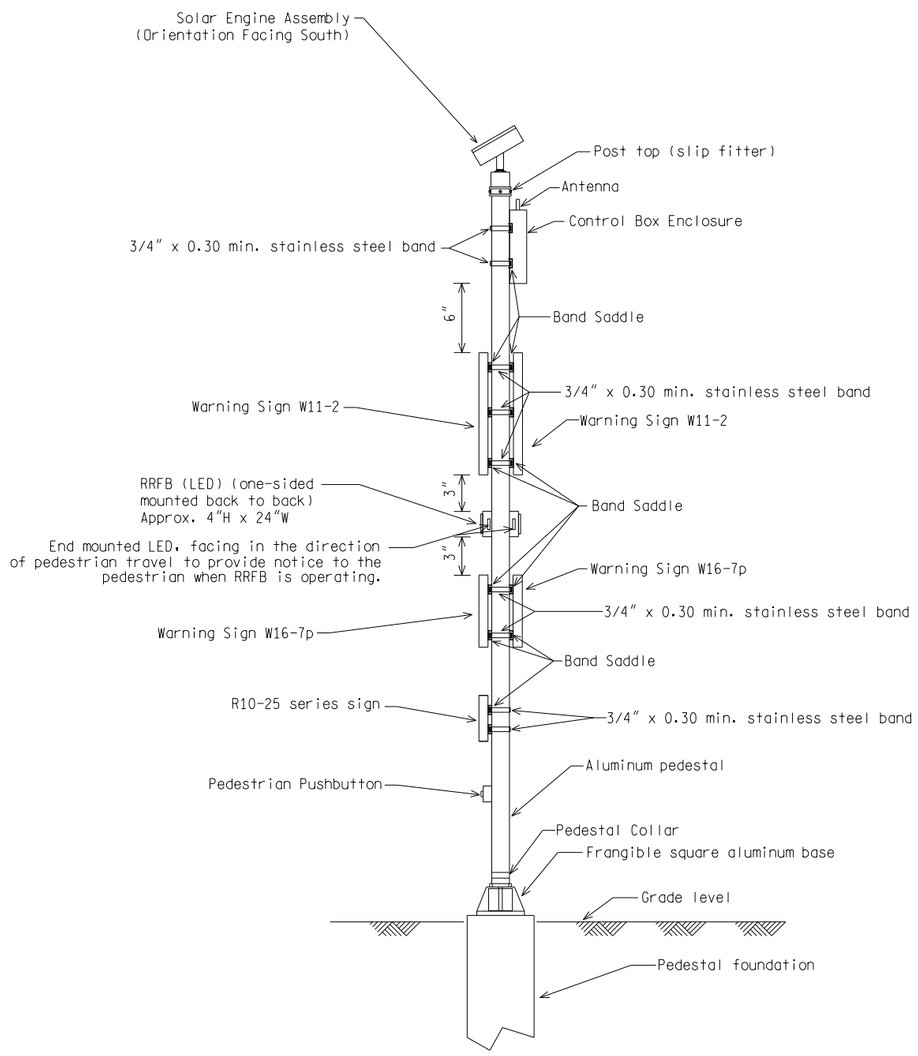

SIDE VIEW

SOLAR POWER ASSEMBLY (TWO-SIDED RRFB)

NOT TO SCALE

MICHIGAN DEPARTMENT OF TRANSPORTATION BUREAU OF HIGHWAYS DELIVERY STANDARD PLAN	(SPECIAL DETAIL) FHWA APPROVAL DATE		SIG-027-B	SHEET 3 of 5
File:	Rev. 09/17/13	PLAN DATE		

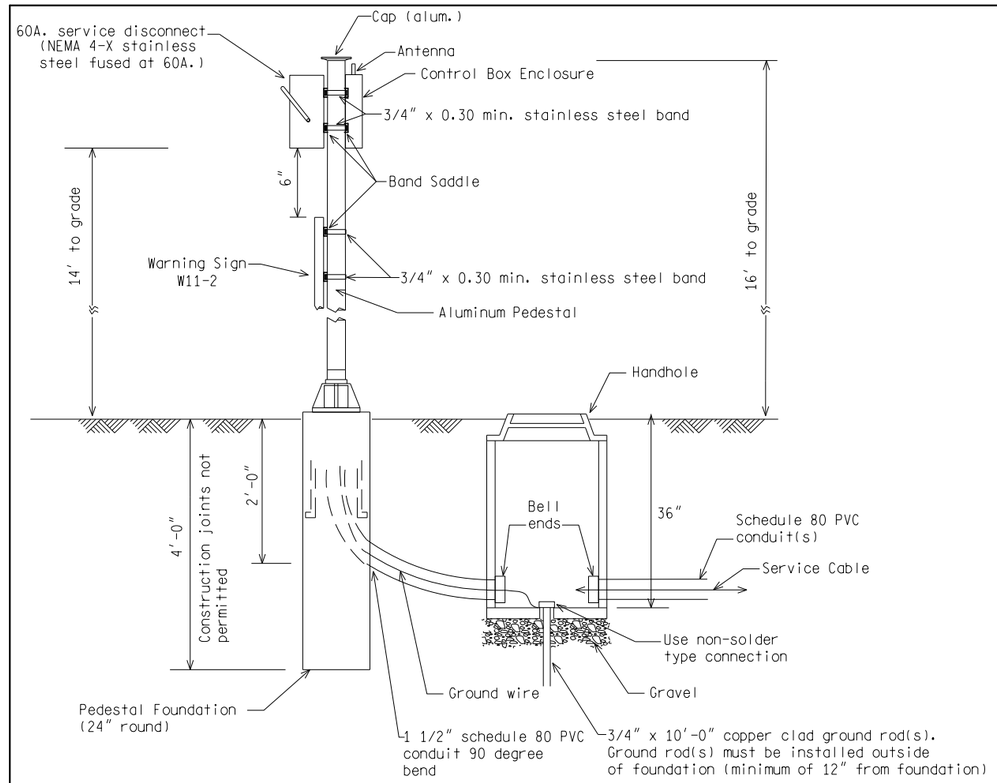

PERMANENT POWER SOURCE (RRFB)

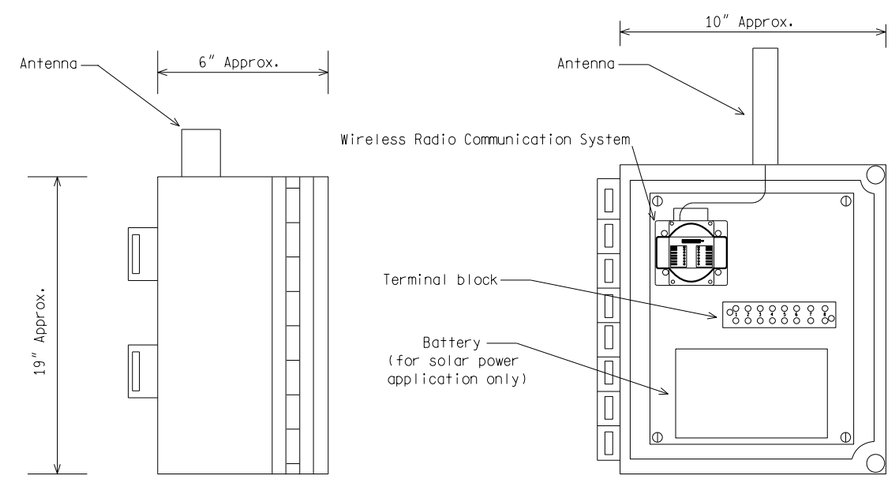

SIDE VIEW

CONTROL BOX ENCLOSURE DETAIL

INSIDE VIEW

NOT TO SCALE

MICHIGAN DEPARTMENT OF TRANSPORTATION BUREAU OF HIGHWAYS DELIVERY STANDARD PLAN	(SPECIAL DETAIL) FHWA APPROVAL DATE		SIG-027-B	SHEET 4 of 5
File:	Rev. 09/17/13	PLAN DATE		

10-01-15

SIGNAL STANDARD DETAIL SHEETS
AOL ROAD CROSSING
PITTSFIELD TOWNSHIP, WASHENAW COUNTY

AS-LET PLAN REVISIONS							
NO.	DATE	AUTH	DESCRIPTION	NO.	DATE	AUTH	DESCRIPTION
33							

MDOT Michigan Department of Transportation

	DATE: 10-01-15	CS:	SIGNAL STANDARD DETAIL SHEETS	DRAWING	SHEET
	DESIGN UNIT:	JN: PERMIT	AOL ROAD CROSSING		35
FILE:	TSC:		PITTSFIELD TOWNSHIP, WASHENAW COUNTY		

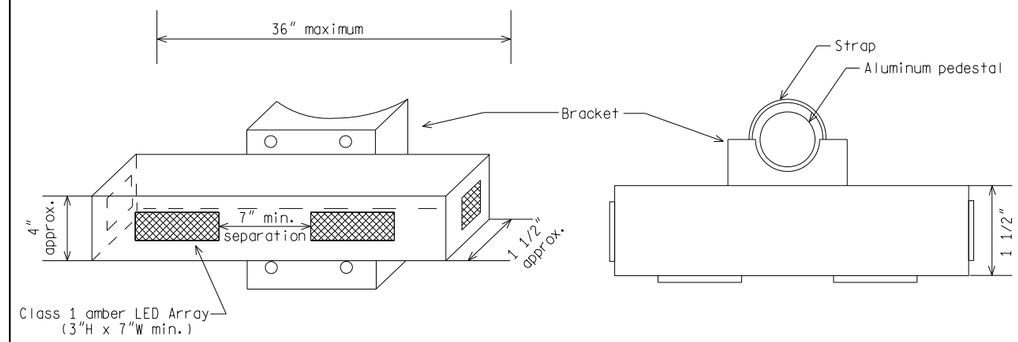

FRONT VIEW

TOP VIEW

ONE-WAY RRFB (4 LED'S)

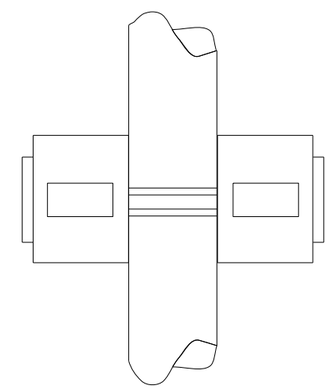

SIDE VIEW

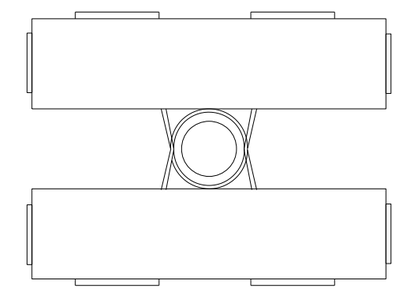

TOP VIEW

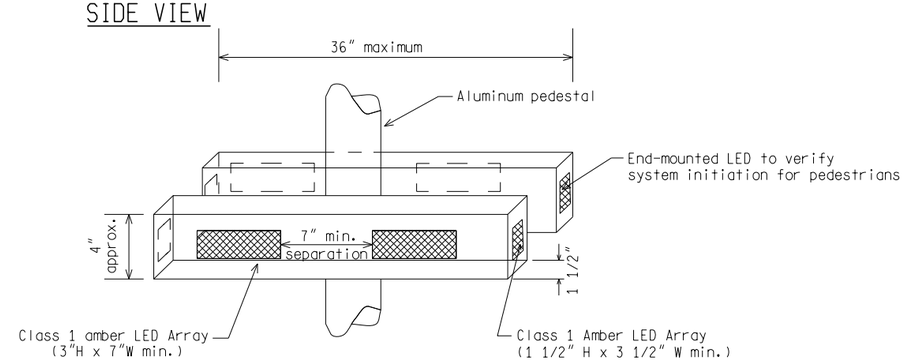

FRONT VIEW

TWO-WAY RRFB (8 LED'S)

TWO ONE WAY MOUNTED BACK TO BACK

Notes: 1) All dimensions are approximate.
2) Use manufacturer's recommended mounting brackets, fittings, and connectors.
3) Use AISI 300 series stainless steel hardware.

NOT TO SCALE

MICHIGAN DEPARTMENT OF TRANSPORTATION BUREAU OF HIGHWAYS DELIVERY STANDARD PLAN	(SPECIAL DETAIL) FHWA APPROVAL DATE	PLAN DATE	SIG-027-B	SHEET 5 of 5
File:	Rev. 09/17/13			

10-01-15

SIGNAL STANDARD DETAIL SHEETS
AOL ROAD CROSSING
PITTSFIELD TOWNSHIP, WASHENAW COUNTY

AS-LET PLAN REVISIONS							
NO.	DATE	AUTH	DESCRIPTION	NO.	DATE	AUTH	DESCRIPTION
33							

MDOT Michigan Department of Transportation

	DATE: 10-01-15	CS:	SIGNAL STANDARD DETAIL SHEETS	DRAWING	SHEET
	DESIGN UNIT:	JN: PERMIT	AOL ROAD CROSSING		36
FILE:	TSC:		PITTSFIELD TOWNSHIP, WASHENAW COUNTY		

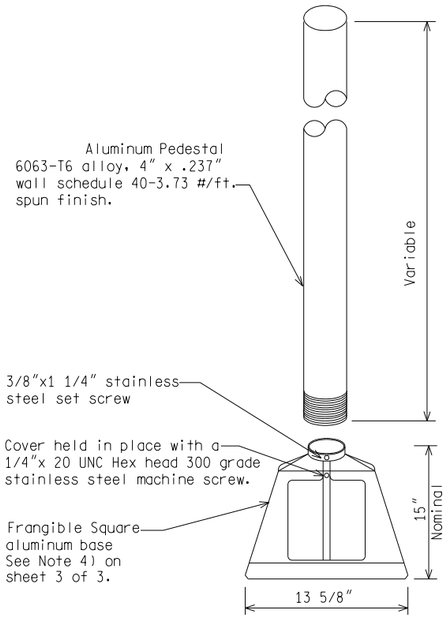

SQUARE ALUMINUM BASE

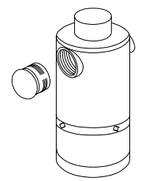

POST TOP
(SLIP FITTER)

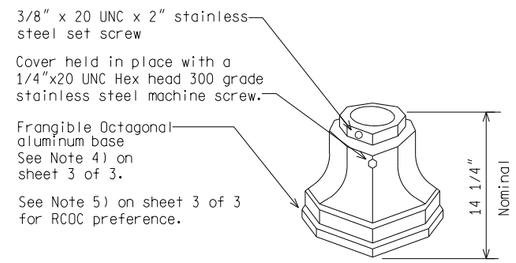

OCTAGONAL BASE

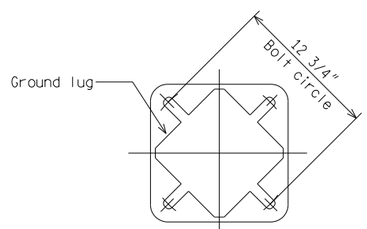

SQUARE BASE
BOTTOM PLAN

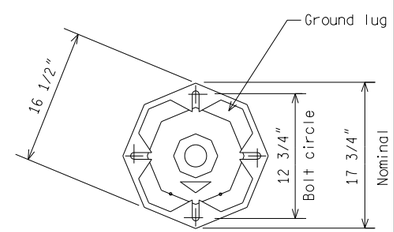

OCTAGONAL BASE
BOTTOM PLAN

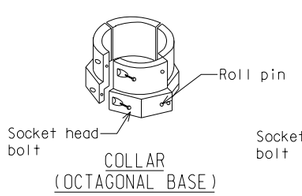

COLLAR
(OCTAGONAL BASE)

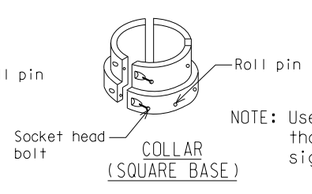

COLLAR
(SQUARE BASE)

NOTE: Use pedestal collar for pedestal length greater than or equal to 14' (typical for 3 color traffic signals with pedestrian signals)

NOT TO SCALE

File: PW:RD/TR/Signals/Web/Statewide SD/Final Rev. 07/21/15

MDOT Michigan Department of Transportation

PREPARED BY
TRAFFIC AND SAFETY

DRAWN BY:
CHECKED BY:

ENGINEER OF DELIVERY

ENGINEER OF DEVELOPMENT

(SPECIAL DETAIL)
FHWA APPROVAL DATE

MICHIGAN DEPARTMENT OF TRANSPORTATION
BUREAU OF HIGHWAYS DELIVERY STANDARD PLAN FOR

PEDESTAL FOUNDATION AND SIGNAL MOUNTING DETAILS

PLAN DATE

SIG-028-B

SHEET
1 of 3

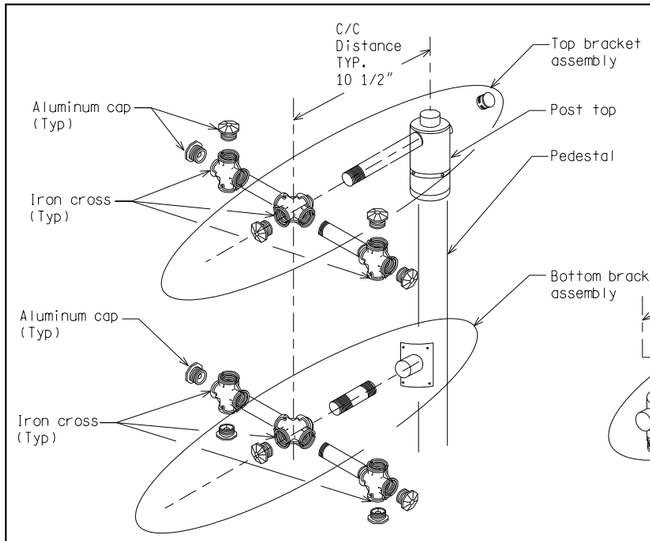

SIGNAL MOUNTING HARDWARE FOR BACKSIDE BRACKET

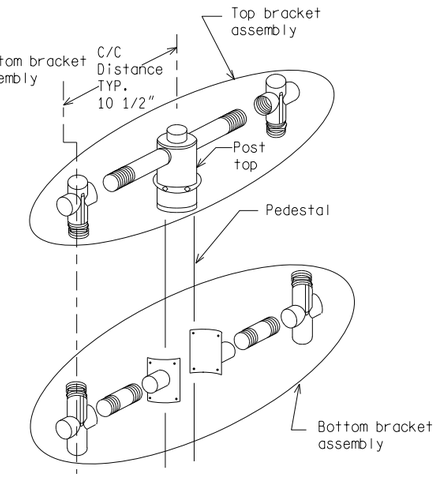

SIGNAL MOUNTING HARDWARE - STANDARD BRACKET

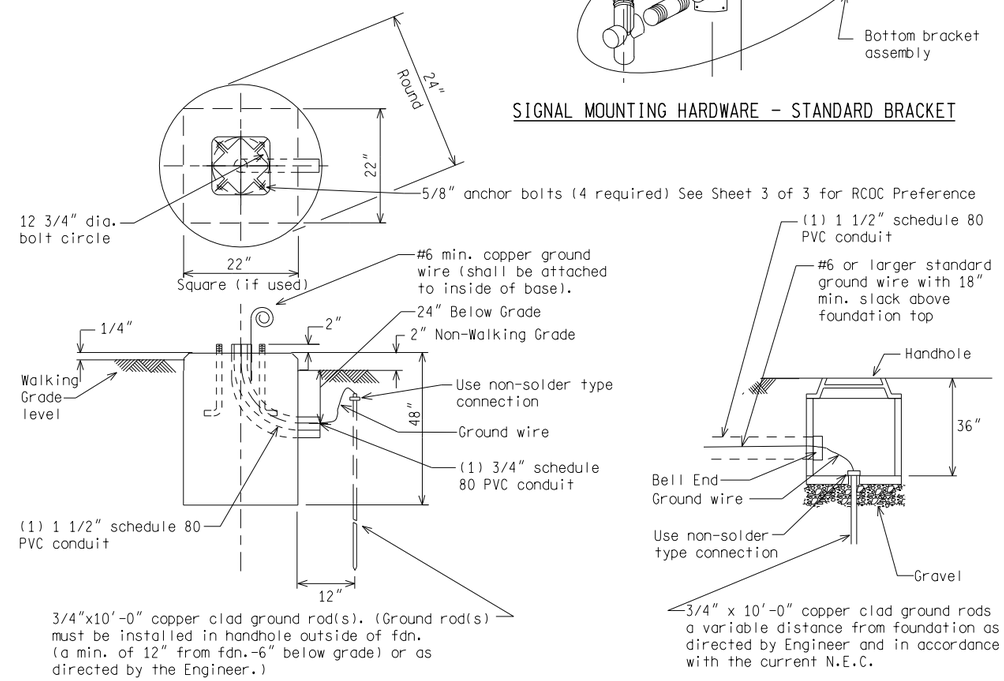

PEDESTAL FOUNDATION

See notes 1, 2 & 3 on sheet 3 of 3.

HANDHOLE DETAIL

NOT TO SCALE

MICHIGAN DEPARTMENT OF TRANSPORTATION
BUREAU OF HIGHWAYS DELIVERY STANDARD PLAN

(SPECIAL DETAIL)
FHWA APPROVAL DATE

File: Rev. 07/21/15

PLAN DATE

SIG-028-B

SHEET
2 of 3

10-01-15

SIGNAL STANDARD DETAIL SHEETS
AOL ROAD CROSSING
PITTSFIELD TOWNSHIP, WASHENAW COUNTY

AS-LET PLAN REVISIONS							
NO.	DATE	AUTH	DESCRIPTION	NO.	DATE	AUTH	DESCRIPTION
33							

MDOT Michigan Department of Transportation

FILE:

DATE: 10-01-15
DESIGN UNIT:
TSC:

CS:
JN: PERMIT

SIGNAL STANDARD DETAIL SHEETS
AOL ROAD CROSSING
PITTSFIELD TOWNSHIP, WASHENAW COUNTY

DRAWING

SHEET
37

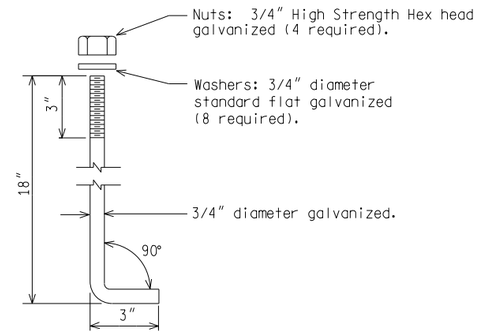

For use on MDOT Trunkline.

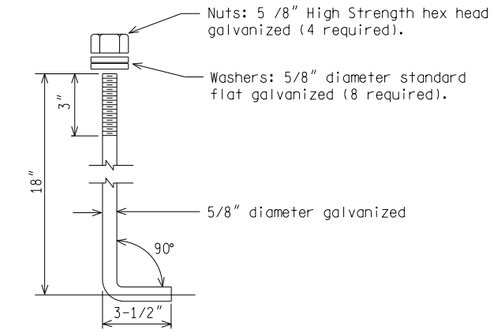

For use on Oakland County Roads only.

ANCHOR BOLT DETAIL

NOTE: Anchor bolts are to be ASTM-A307 steel (4-required)

NOTES:

1) Alternate foundation may be constructed 22"x22" square - 48" deep.

2) Grounding system shall measure 10 ohm or less to ground.

3) Construction joints not permitted in foundation.

4) Pedestal base must meet the requirements of National Cooperative Highway Research Program Report 350 (NCHRP 350) or Manual for Assessing Safety Hardware (MASH) and have Federal Highway Administration (FHWA) acceptance. Pedestal base must also be certified to have a 4-inch maximum stub height after the support has broken away from its base, as specified in the AASHTO Standard Specifications for Structural Supports for Highway Signs, Luminaries, and Traffic Signals and the AASHTO Roadside Design Guide.

5) Use the Octagonal Base as a preference by the Road Commission for Oakland County (RCOC), for use on Oakland County roads only.

NOT TO SCALE

MICHIGAN DEPARTMENT OF TRANSPORTATION BUREAU OF HIGHWAYS DELIVERY STANDARD PLAN	(SPECIAL DETAIL) FHWA APPROVAL DATE		SIG-028-B	SHEET 3 of 3
File:	Rev. 07/21/15	PLAN DATE		

10-01-15

SIGNAL STANDARD DETAIL SHEETS
AOL ROAD CROSSING
PITTSFIELD TOWNSHIP, WASHENAW COUNTY

AS-LET PLAN REVISIONS							
NO.	DATE	AUTH	DESCRIPTION	NO.	DATE	AUTH	DESCRIPTION
33							

MDOT Michigan Department of Transportation

	DATE: 10-01-15	CS:	SIGNAL STANDARD DETAIL SHEETS	DRAWING / SHEET
	DESIGN UNIT:	JN: PERMIT	AOL ROAD CROSSING	38
FILE:	TSC:		PITTSFIELD TOWNSHIP, WASHENAW COUNTY	

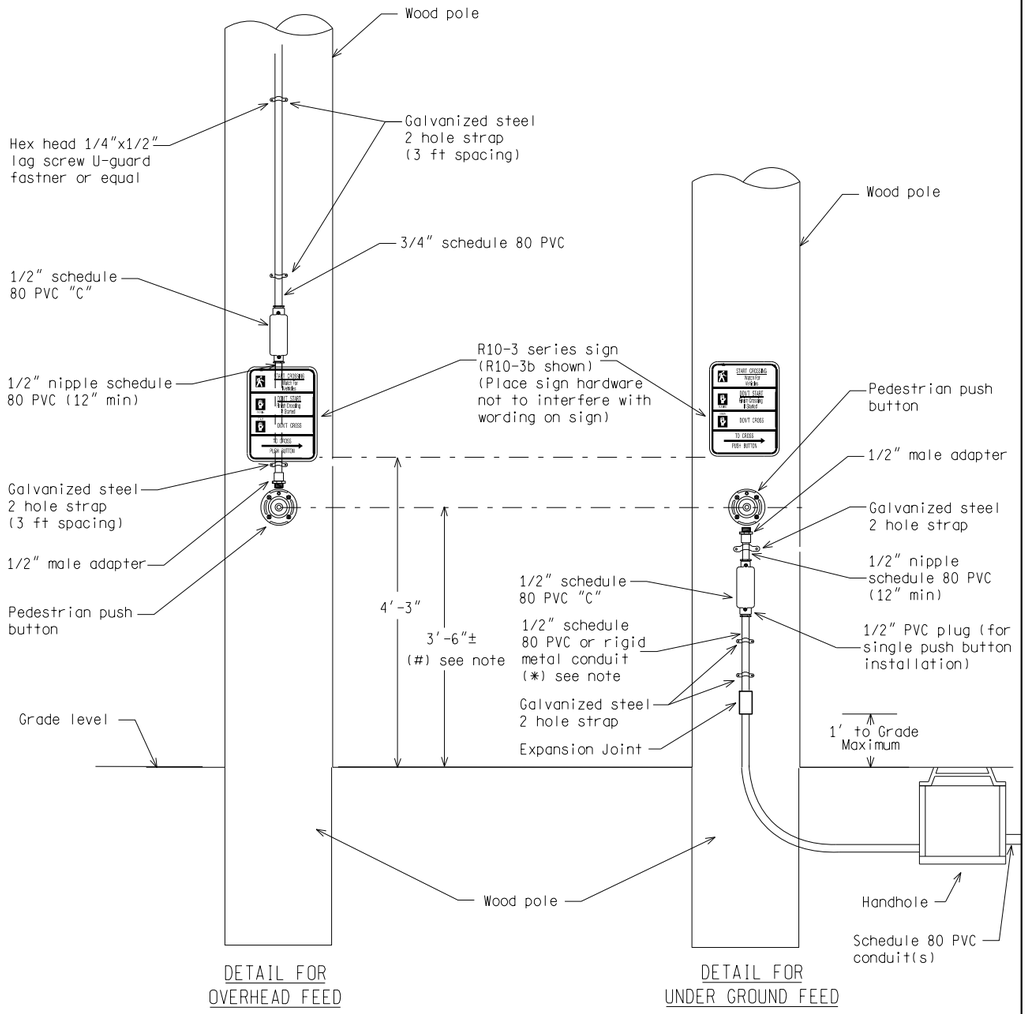

Note: (*) For projects maintained by the Wayne Co. Department of Public Services (WCDPS), use rigid metal for conduit(s) from grade level to 10' (min.) above grade or as directed by the Engineer.

(#) If pushbutton is from 10" to 24" from edge of sidewalk an acceptable range is 38" to 46"

PEDESTRIAN PUSH BUTTON DETAILS ON WOOD POLE

NOT TO SCALE

File: PW:RD/TR/Signals/Web/Statewide SD/Final Rev. 02/17/15

MDOT Michigan Department of Transportation

PREPARED BY TRAFFIC AND SAFETY

DRAWN BY:

CHECKED BY:

ENGINEER OF DELIVERY

ENGINEER OF DEVELOPMENT

(SPECIAL DETAIL)
FHWA APPROVAL DATE

MICHIGAN DEPARTMENT OF TRANSPORTATION
BUREAU OF HIGHWAYS DELIVERY STANDARD PLAN FOR

PEDESTRIAN PUSH BUTTON DETAILS

PLAN DATE

SIG-120-A

SHEET 1 of 4

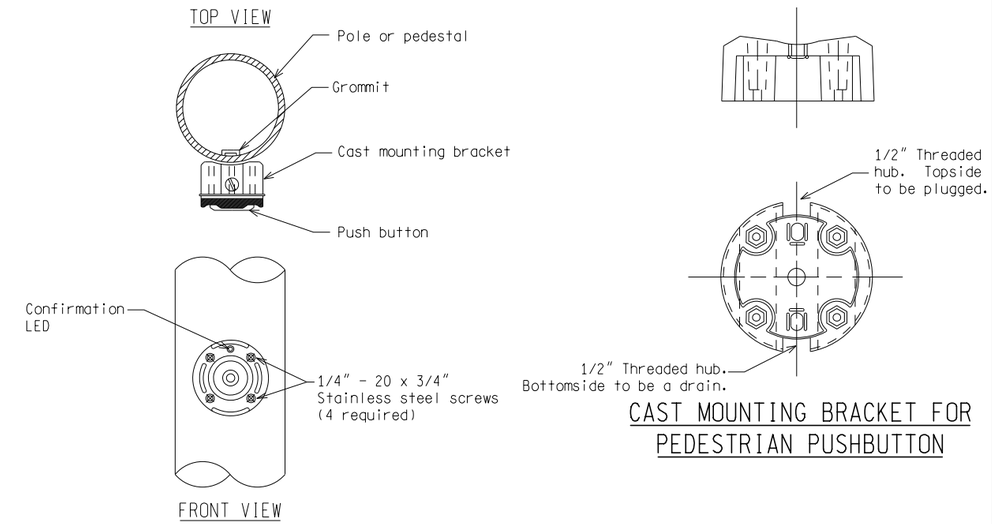

CAST MOUNTING BRACKET FOR PEDESTRIAN PUSHBUTTON

PEDESTRIAN PUSHBUTTON INSTALLATION ON STEEL POLE OR PEDESTAL

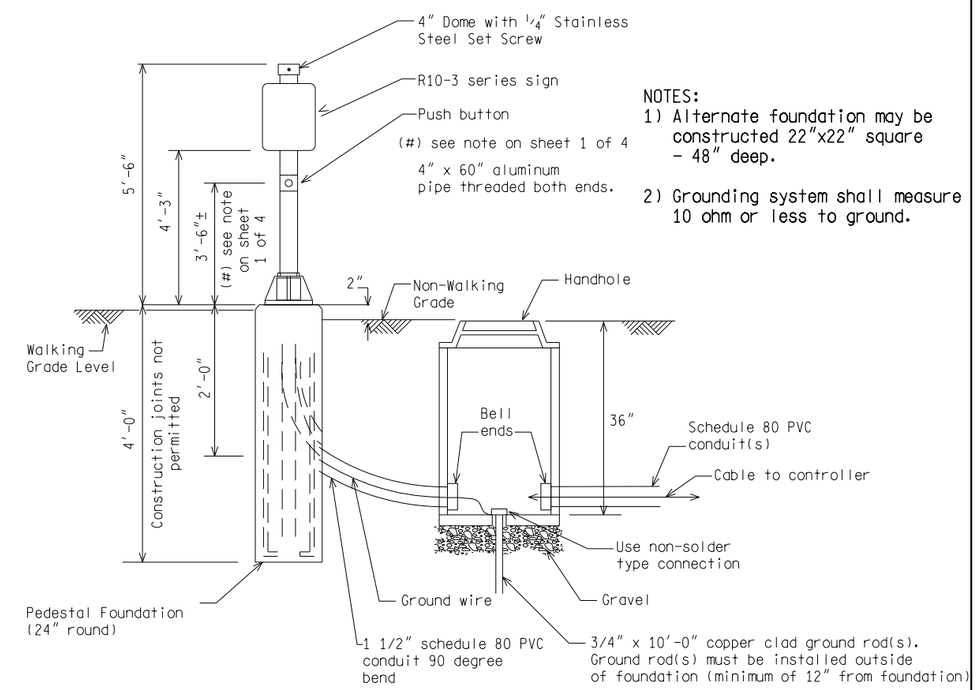

NOTES:
1) Alternate foundation may be constructed 22"x22" square - 48" deep.
2) Grounding system shall measure 10 ohm or less to ground.

PUSH BUTTON PEDESTAL

NOT TO SCALE

MICHIGAN DEPARTMENT OF TRANSPORTATION
BUREAU OF HIGHWAYS DELIVERY STANDARD PLAN

(SPECIAL DETAIL)
FHWA APPROVAL DATE

File: Rev. 02/17/15

PLAN DATE

SIG-120-A

SHEET 2 of 4

SIGNAL STANDARD DETAIL SHEETS
AOL ROAD CROSSING
PITTSFIELD TOWNSHIP, WASHENAW COUNTY

10-01-15

AS-LET PLAN REVISIONS							
NO.	DATE	AUTH	DESCRIPTION	NO.	DATE	AUTH	DESCRIPTION

MDOT Michigan Department of Transportation

FILE:

DATE: 10-01-15
DESIGN UNIT:
TSC:

CS:
JN: PERMIT

SIGNAL STANDARD DETAIL SHEETS
AOL ROAD CROSSING
PITTSFIELD TOWNSHIP, WASHENAW COUNTY

DRAWING | SHEET

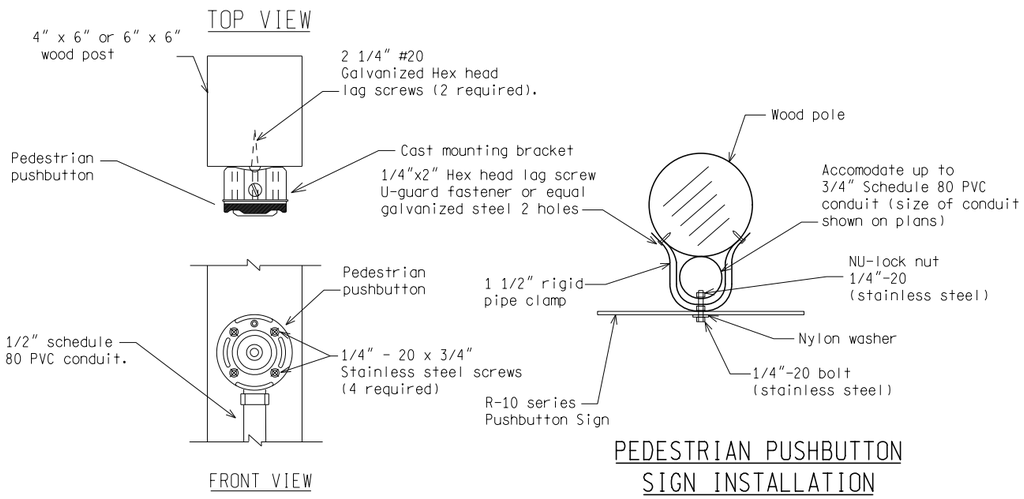

PEDESTRIAN PUSHBUTTON INSTALLATION ON WOOD POST

PEDESTRIAN PUSHBUTTON SIGN INSTALLATION ON WOOD POLE

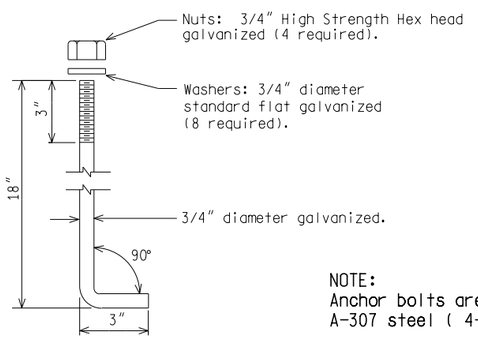

ANCHOR BOLT DETAIL

NOTE:
Anchor bolts are to be ASTM A-307 steel (4-required)

NOT TO SCALE

MICHIGAN DEPARTMENT OF TRANSPORTATION BUREAU OF HIGHWAYS DELIVERY STANDARD PLAN	(SPECIAL DETAIL) FHWA APPROVAL DATE	PLAN DATE	SIG-120-A	SHEET 3 of4
File:	Rev. 02/17/15			

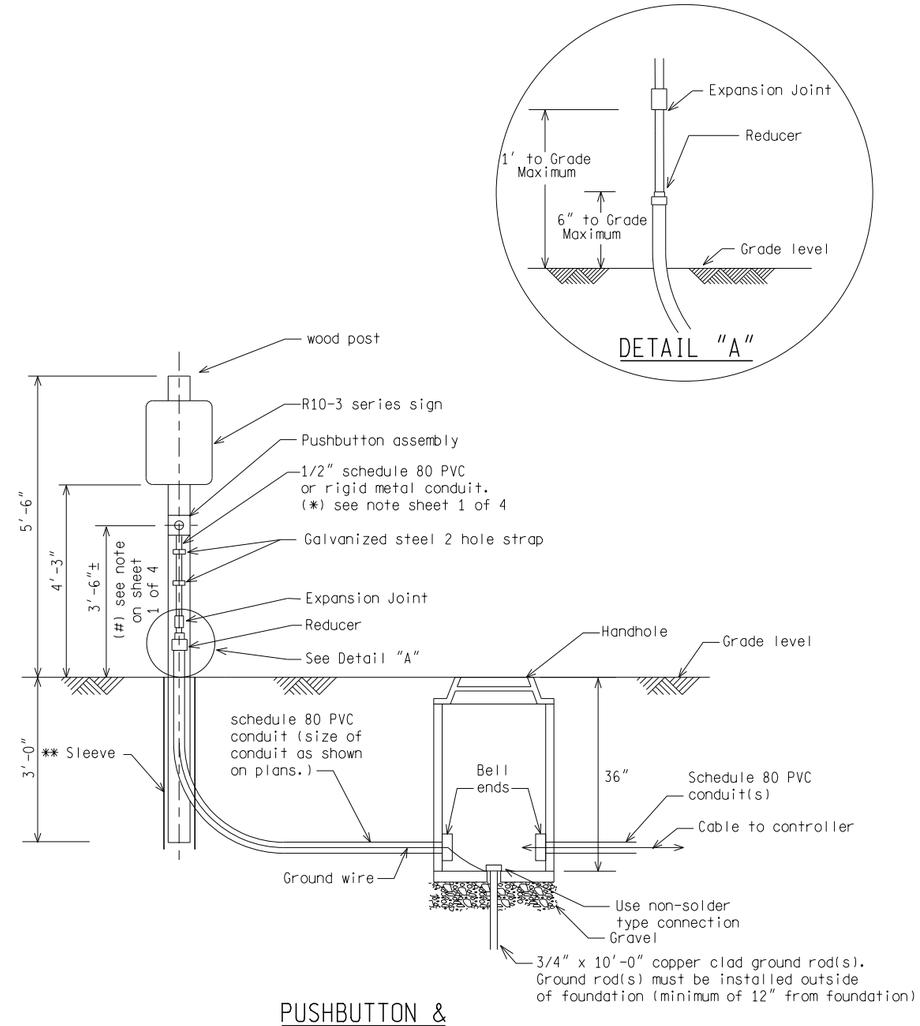

PUSHBUTTON & WOOD POST

** Refer to Standard Plan for Wood Posts

NOT TO SCALE

MICHIGAN DEPARTMENT OF TRANSPORTATION BUREAU OF HIGHWAYS DELIVERY STANDARD PLAN	(SPECIAL DETAIL) FHWA APPROVAL DATE	PLAN DATE	SIG-120-A	SHEET 4 of4
File:	Rev. 02/17/15			

10-01-15

SIGNAL STANDARD DETAIL SHEETS
AOL ROAD CROSSING
PITTSFIELD TOWNSHIP, WASHENAW COUNTY

AS-LET PLAN REVISIONS							
NO.	DATE	AUTH	DESCRIPTION	NO.	DATE	AUTH	DESCRIPTION
33							

MDOT Michigan Department of Transportation

	DATE: 10-01-15	CS:	SIGNAL STANDARD DETAIL SHEETS	DRAWING	SHEET
	DESIGN UNIT:	JN: PERMIT	AOL ROAD CROSSING		40
FILE:	TSC:		PITTSFIELD TOWNSHIP, WASHENAW COUNTY		

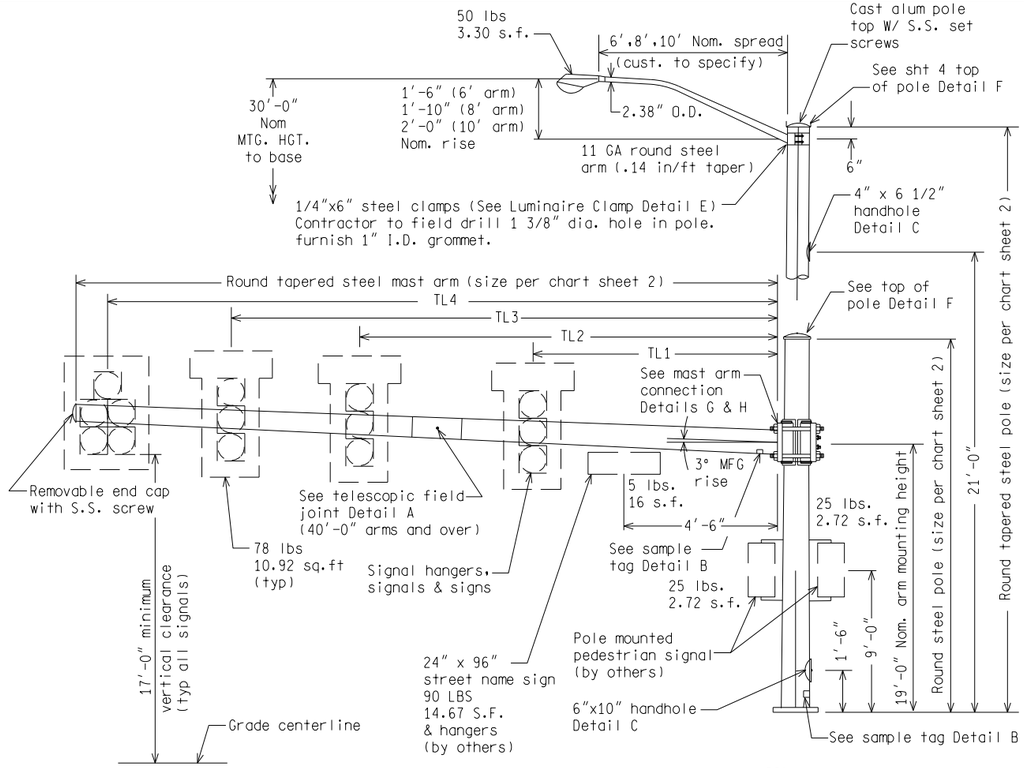

TELESCOPIC FIELD JOINT DETAIL A

SAMPLE POLE & ARM TAGS DETAIL B

TO BE ATTACHED TO POLE
OR ARM 4" FROM BASE OF TUBE
(STAMPED IN 3/8" CHARACTERS)
ATTACHED TO POLE/ARM WITH
(4) #8x3/8 SS TYPE U DRIVE SCREWS EACH

NOT TO SCALE

File: PW:Doc/R Doc/Traf Ref/Signals/Web/Sp Det/Final Rev. 04/15/14

MDOT Michigan Department of Transportation

PREPARED BY
TRAFFIC AND SAFETY

DRAWN BY:

CHECKED BY:

ENGINEER OF DELIVERY

ENGINEER OF DEVELOPMENT

(SPECIAL DETAIL)
FHWA APPROVAL DATE

MICHIGAN DEPARTMENT OF TRANSPORTATION
BUREAU OF HIGHWAYS DELIVERY STANDARD PLAN FOR

TRAFFIC SIGNAL MAST ARM POLE
AND MAST ARM DETAILS - CATEGORY III

PLAN DATE

SIG-283-A

SHEET
1 of 4

POLE SIZE
0.3125-14.00x11.06x21'-0"
0.3125-14.00x9.80x30'-0"
0.3125-14.00x8.96x36'-0"
0.3125-14.00x8.40x40'-0"

LUM. SPAN
6'-0"
8'-0"
10'-0"
24'-0"

MATERIAL SPECIFICATION	
TUBES 24' LUM ARM	ASTM-A595 GR. A
LUMINAIRE ARM TUBE	ASTM-A36 MIN. YIELD 45 KSI
LUMINAIRE ARM CLAMP	ASTM-A36
MAST ARM CLAMP	ASTM-A36
PLATE	ASTM-A36
ANCHOR BOLTS, NUTS AND WASHERS	SEE STANDARD SPEC 908.14.A & B
HANDHOLE FRAME	ASTM-A36 OR ASTM-A529 GR. 50 OR ASTM-A572 GR. 50 OR ASTM-A709 GR. 50
LIFTING PIPE	ASTM-A53 GR. B or A501
HANDHOLE COVER	C1010 STEEL
POLE TOP	ASTM-B26 (356F OR 43)
ST. STEEL HARDWARE	AISI-300 SERIES (18-8)
LUM. ARM FLG. BOLTS & NUTS	ASTM-A325
MAST ARM CONN. STUDS	ASTM-A449
"ANCO" LOCK NUTS	ASTM-A563 GR. DH
STRUCTURE FINISH	H.D. GALV. ASTM-123
HARDWARE FINISH	H.D. GALV. ASTM-A153
FLAT WASHERS	ASTM-F436
LOCK WASHERS	ANSI B18.21.1
BOLT & NUT OVER 1/2" DIA. GALV.	ASTM-A153
BOLT & NUT UNDER 1/2" ST. STEEL	AISI-300 SERIES

MAST ARM DATA		SIGNS & SIGNALS					
SPAN	ARM DIMENSIONS	TL1	TL2	TL3	TL4	S1	
20'-0"	0.2500-8.00x5.20x20'-0"	8'-0"	20'-0"	----	----	4'-6"	
25'-0"	0.2500-8.00x4.50x25'-0"	13'-0"	25'-0"	----	----	4'-6"	
30'-0"	0.2500-8.00x3.80x30'-0"	18'-0"	30'-0"	----	----	4'-6"	
35'-0"	0.2500-9.00x4.10x35'-0"	23'-0"	35'-0"	----	----	4'-6"	
40'-0"	0.2500-11.00x5.40x40'-0"	16'-0"	28'-0"	40'-0"	----	4'-6"	
45'-0"	0.3125-11.0x8.66x16'-9" 0.1793-9.30x5.10x30'-0"	21'-0"	33'-0"	45'-0"	----	4'-6"	
50'-0"	0.3125-11.0x8.66x16'-9" 0.1793-9.30x4.40x35'-0"	14'-0"	26'-0"	38'-0"	50'-0"	4'-6"	

TUBE TAPER = 0.1400 in/ft

DESIGN CRITERIA
DESIGNED ACCORDING TO THE 2001 AASHTO STANDARD SPECIFICATIONS FOR STRUCTURAL SUPPORTS FOR HIGHWAY SIGNS, LUMINAIRES, AND TRAFFIC SIGNALS FOR 90 M.P.H. WIND LOAD AND CATEGORY III WITH GALLOPING, NATURAL WIND GUSTS, AND TRUCK INDUCED FATIGUE LOADS.

CATEGORY III

NOT TO SCALE

MICHIGAN DEPARTMENT OF TRANSPORTATION
BUREAU OF HIGHWAYS DELIVERY STANDARD PLAN

(SPECIAL DETAIL)
FHWA APPROVAL DATE

File: PW:Doc/R Doc/Traf Ref/Signals/Web/Sp Det/Final Rev. 04/15/14

PLAN DATE

SIG-283-A

SHEET
2 of 4

10-01-15

SIGNAL STANDARD DETAIL SHEETS
AOL ROAD CROSSING
PITTSFIELD TOWNSHIP, WASHENAW COUNTY

AS-LET PLAN REVISIONS							
NO.	DATE	AUTH	DESCRIPTION	NO.	DATE	AUTH	DESCRIPTION
33							

MDOT Michigan Department of Transportation

FILE:

DATE: 10-01-15
DESIGN UNIT:
TSC:

CS:
JN: PERMIT

SIGNAL STANDARD DETAIL SHEETS
AOL ROAD CROSSING
PITTSFIELD TOWNSHIP, WASHENAW COUNTY

DRAWING

SHEET
41

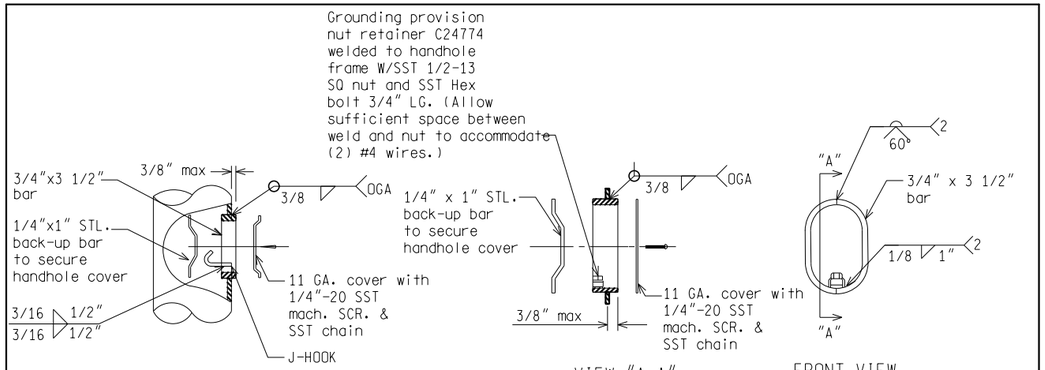

4" x 6 1/2" BAR HANDHOLE DETAIL
(DESIGN WITH 29'-0" POLE ONLY)

VIEW "A-A"

FRONT VIEW

6" x 10" BAR HANDHOLE DETAIL

HANDHOLE DETAIL C

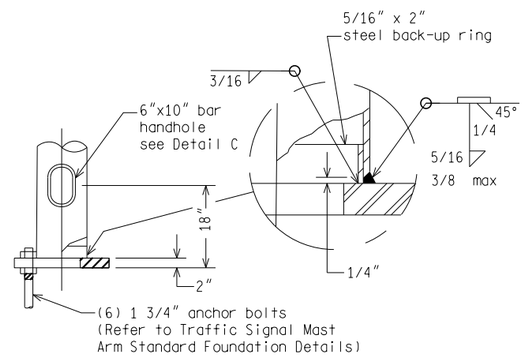

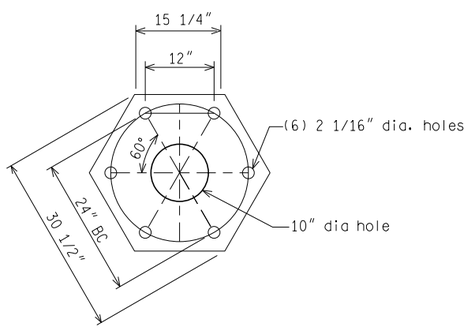

BASE DETAIL D

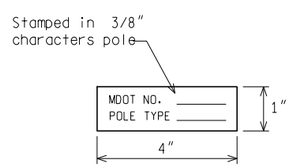

BASE ID TAG DETAIL

CATEGORY III

NOT TO SCALE

MICHIGAN DEPARTMENT OF TRANSPORTATION BUREAU OF HIGHWAYS DELIVERY STANDARD PLAN	(SPECIAL DETAIL) FHWA APPROVAL DATE	PLAN DATE	SIG-283-A	SHEET 3 of 4

File: PW:Doc/R Doc/Traf Ref/Signals/Web/Sp Det/Final Rev. 04/15/14

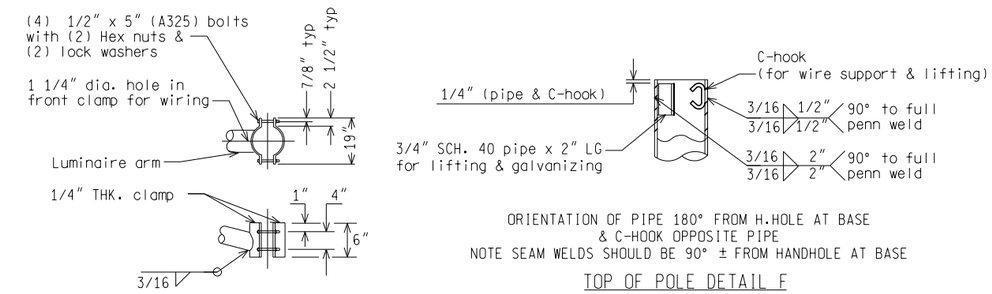

LUMINAIRE CLAMP DETAIL E

ORIENTATION OF PIPE 180° FROM H.HOLE AT BASE
& C-HOOK OPPOSITE PIPE
NOTE SEAM WELDS SHOULD BE 90° ± FROM HANDHOLE AT BASE

TOP OF POLE DETAIL F

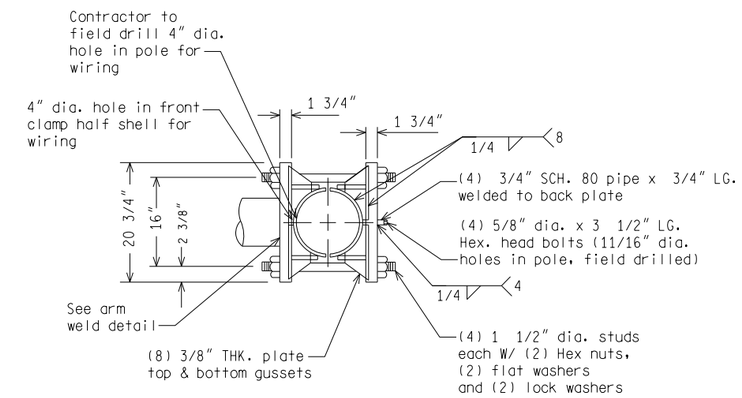

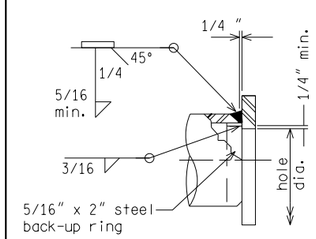

ARM WELD DETAIL G

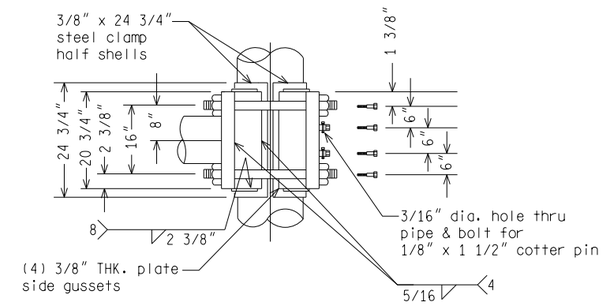

MAST ARM CLAMP DETAIL H

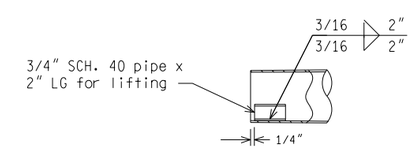

INBOARD ARM END SECTION DETAIL I

CATEGORY III

NOT TO SCALE

MICHIGAN DEPARTMENT OF TRANSPORTATION BUREAU OF HIGHWAYS DELIVERY STANDARD PLAN	(SPECIAL DETAIL) FHWA APPROVAL DATE	PLAN DATE	SIG-283-A	SHEET 4 of 4

File: PW:Doc/R Doc/Traf Ref/Signals/Web/Sp Det/Final Rev. 04/15/14

10-01-15

SIGNAL STANDARD DETAIL SHEETS
AOL ROAD CROSSING
PITTSFIELD TOWNSHIP, WASHENAW COUNTY

AS-LET PLAN REVISIONS							
NO.	DATE	AUTH	DESCRIPTION	NO.	DATE	AUTH	DESCRIPTION
33							

MDOT Michigan Department of Transportation

FILE:

DATE: 10-01-15
DESIGN UNIT:
TSC:

CS:
JN: PERMIT

SIGNAL STANDARD DETAIL SHEETS
AOL ROAD CROSSING
PITTSFIELD TOWNSHIP, WASHENAW COUNTY

DRAWING
SHEET 42

NOTES:

1) All ground rods shall be 3/4"x10' copper clad rod a minimum of 2 ground rods shall be used (one for the service disconnect and one for the messenger cable & pole).

2) Ground rod placement shall not be less than 12" from the foundation with a minimum of 6' between ground rods. Placement shall be as directed by the Engineer and in compliance with N.E.C.

3) Ground wire connection to grounding rod(s) shall utilize a non-solder type connection.

4) Indicate the direction of conduits in foundation top with an arrow.

5) Install pole that the foundation & anchor bolts are plumb.

6) All grounds shall provide less than 10 ohm resistance to ground.

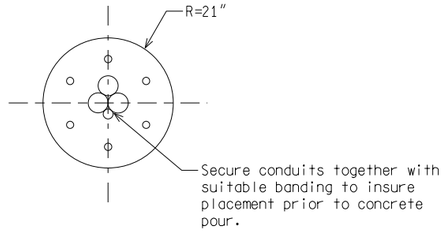

PLAN

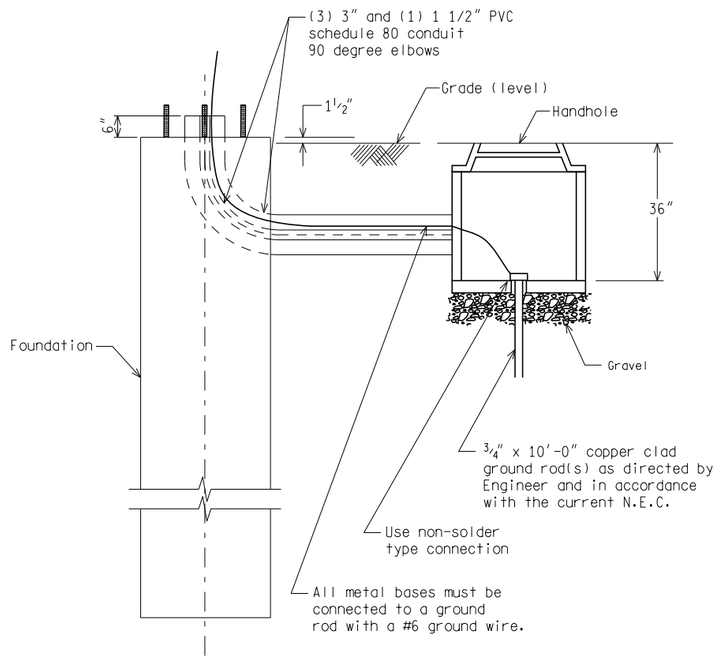

ELEVATION

MAST ARM FOUNDATION CONDUIT AND GROUNDING

NOT TO SCALE

File: PW:RD/TR/Signals/Web/Statewide SD/Final Rev. 11/19/13

MDOT Michigan Department of Transportation

PREPARED BY TRAFFIC AND SAFETY

DRAWN BY:

CHECKED BY:

ENGINEER OF DELIVERY

ENGINEER OF DEVELOPMENT

(SPECIAL DETAIL)
FHWA APPROVAL DATE

MICHIGAN DEPARTMENT OF TRANSPORTATION
BUREAU OF HIGHWAYS DELIVERY STANDARD PLAN FOR

TRAFFIC SIGNAL MAST ARM STANDARD FOUNDATIONS

PLAN DATE | SIG-284-A | SHEET 1 of 4

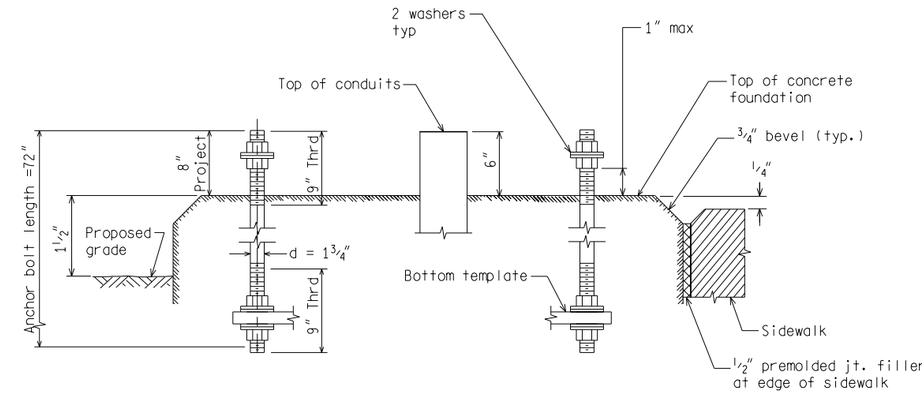

ANCHOR BOLTS

NOTE:
Trench for placement of conduits after casing is in place and before dewatering.

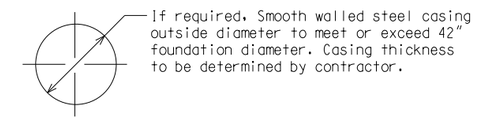

PLAN

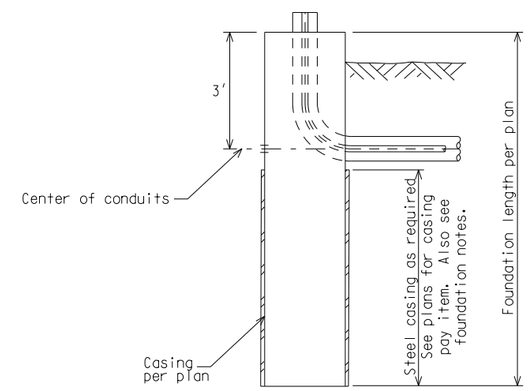

ELEVATION

DRILLED FOUNDATION SHAFT (SHOWN WITH CASING PAY ITEM)

NOT TO SCALE

MICHIGAN DEPARTMENT OF TRANSPORTATION
BUREAU OF HIGHWAYS DELIVERY STANDARD PLAN

(SPECIAL DETAIL)
FHWA APPROVAL DATE

File: Rev. 11/19/13

PLAN DATE | SIG-284-A | SHEET 2 of 4

10-01-15

SIGNAL STANDARD DETAIL SHEETS
AOL ROAD CROSSING
PITTSFIELD TOWNSHIP, WASHENAW COUNTY

AS-LET PLAN REVISIONS							
NO.	DATE	AUTH	DESCRIPTION	NO.	DATE	AUTH	DESCRIPTION

MDOT Michigan Department of Transportation

FILE:

DATE: 10-01-15
DESIGN UNIT:
TSC:

CS:
JN: PERMIT

SIGNAL STANDARD DETAIL SHEETS
AOL ROAD CROSSING
PITTSFIELD TOWNSHIP, WASHENAW COUNTY

DRAWING | SHEET 43

NOTES:

1. Anchor bolts shall be set and held vertical at the correct location and at the proper elevation with a 3/4" steel (or approved equal) template a minimum of 24 hours after the concrete placement has been completed.
2. (6) 1 3/4" - 72" Anchor bolts with (4) Hex nuts and (4) washers per bolt.
3. 24" dia bolt circle for Category I, Category II, and Category III Mast Arms.
4. Mast arm orientation is not dependent on anchor bolt position.
5. Use #4 AWG or larger standard bare ground wire bonded by mechanical connection to foundation reinforcing steel and having 24" of slack above the top of foundation.
6. Galvanize all exposed nuts, bolts, and washers according to ASTM F2329. Galvanize all other steel items according to ASTM A123. Embedded nuts, bolts, washers, and steel ring need not be galvanized.

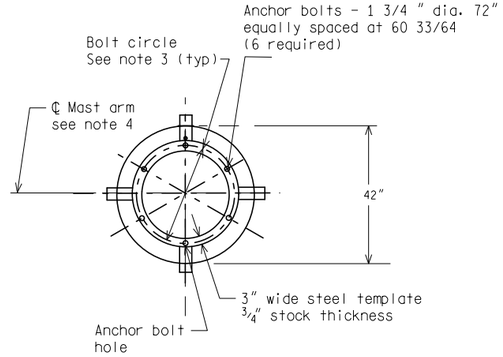

PLAN VIEW

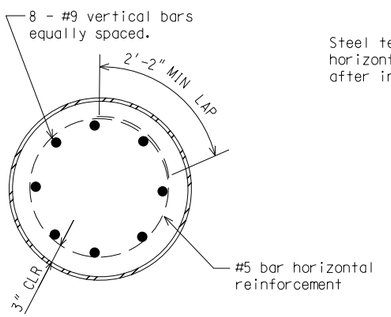

SECTION A-A

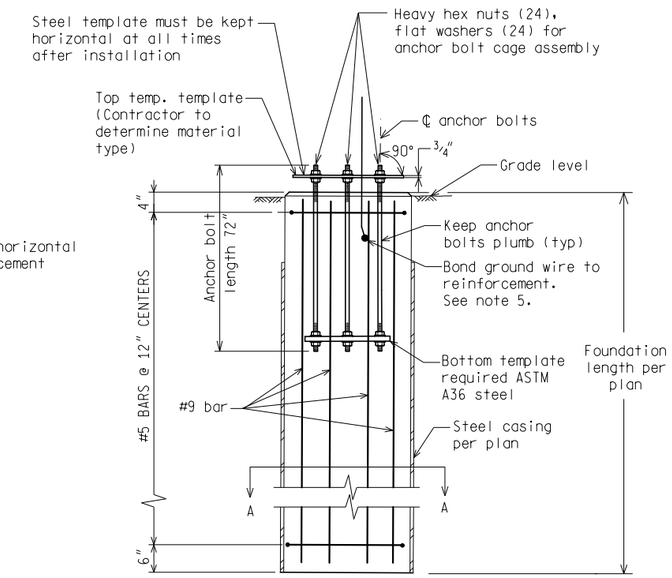

ELEVATION

MAST ARM FOUNDATION
(SHOWN WITH CASING PAY ITEM)

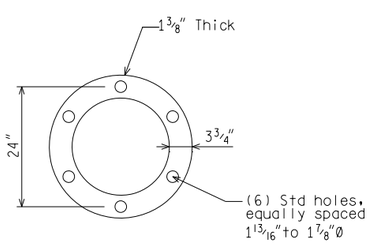

BOTTOM STEEL TEMPLATE

NOT TO SCALE

MICHIGAN DEPARTMENT OF TRANSPORTATION BUREAU OF HIGHWAYS DELIVERY STANDARD PLAN	(SPECIAL DETAIL) FHWA APPROVAL DATE		SIG-284-A	SHEET 3 of 4
File:	Rev. 11/19/13	PLAN DATE		

Foundation Notes:

1. Refer to the following special provisions related to 6 anchor bolt mast arm poles:
   Traffic Signal Mast Arm Pole and Mast Arm
   Mast Arm Pole Foundation and Anchor Bolts
   Casing Used With Strain Poles and Mast Arm Poles
2. Templates shall be shop fabricated and assembled prior to being approved by MDOT for shipping.
3. Diameter of bolt holes in template shall be 1/16 " larger than anchor bolt diameter.
4. Conduits and anchor bolts shall be rigidly installed before concrete is placed. The center of the template shall coincide with the center of the foundation. The template and handles shall be well supported, horizontally level and firmly anchored in place a minimum of 24 hours after the concrete placement is completed.
5. Due care shall be taken during the concrete placement to avoid displacing the anchor bolts.
6. No hammering on the anchor bolts or template will be allowed.
7. After template is removed, thread nuts on to the bolt flush with the bolt end to protect threads until signal support is erected.
8. For anchor bolt material refer to section 908.14 A and B of the Michigan Standard Specifications for Construction. For anchor bolt installation and tightening refer to section 810.03 N.
9. Dewatering of wet shafts is not allowed. A wet shaft is defined as having more than 3 inches of standing water or as having water infiltrating at a rate equal to or exceeding 12 inches per hour. For wet shafts, Concrete is to be placed in accordance with section 718.03. (wet construction method) with a tremie tube or concrete pump beginning at the shaft bottom. Grade T concrete must be used for underwater placement. Grade S2 may be used in dry excavations only. See MDOT standard specifications Tables 701-1A and 701-1B (Concrete Structure Mixtures).
10. Per MDOT standard specifications 718.02, the Grade S2 acceptable slump range is 6-8 inches. The Grade T acceptable slump range is 7-9 inches.
11. If soil conditions indicate there is no need for a casing pay item as shown on the plans, the contractor should request permission of the engineer to install the foundation without casing.
12. When the casing pay item is included on the plans for a foundation (due to granular soils or a wet hole), steel casing (smooth walled) is to be installed to enable the foundation to be poured. The thickness of the steel is to be determined by the contractor. The steel casing shall be left in place. A suitable method of compaction must be employed to ensure the soil immediately outside the casing is compacted properly.
13. When the casing pay item is called for on the plans, the steel casing may stop at the conduit entrance to foundation. Top of foundation must then be formed separately. The casing pay item quantity will be paid for based on actual linear feet installed.
14. Construct mast arm foundations, according to subsections 718.03 of the Standard Specifications for Construction. All work and materials shall be in accordance with the MDOT Standard Specifications.
15. Steel reinforcement shall be ASTM A615 grade 60 without epoxy coating.
16. Exposed concrete surfaces shall be cast in forms. Exposed concrete edges shall be beveled 3/4".
17. Steel reinforcement shall have a clear cover of 3 inches unless noted otherwise. Steel Reinforcement may be adjusted to ensure proper clear cover.
18. Grounding of pole includes adding #4 bare copper ground wire bonded by mechanical connection to foundation reinforcing steel and having 24" of slack above the top of foundation.

NOT TO SCALE

MICHIGAN DEPARTMENT OF TRANSPORTATION BUREAU OF HIGHWAYS DELIVERY STANDARD PLAN	(SPECIAL DETAIL) FHWA APPROVAL DATE		SIG-284-A	SHEET 4 of 4
File:	Rev. 11/19/13	PLAN DATE		

10-01-15

SIGNAL STANDARD DETAIL SHEETS
AOL ROAD CROSSING
PITTSFIELD TOWNSHIP, WASHENAW COUNTY

AS-LET PLAN REVISIONS							
NO.	DATE	AUTH	DESCRIPTION	NO.	DATE	AUTH	DESCRIPTION
33							

MDOT Michigan Department of Transportation

FILE:	DATE: 10-01-15	CS:	SIGNAL STANDARD DETAIL SHEETS	DRAWING	SHEET
	DESIGN UNIT:	JN: PERMIT	AOL ROAD CROSSING		44
	TSC:		PITTSFIELD TOWNSHIP, WASHENAW COUNTY		

* MAXIMUM TURNING SPACE SLOPE IS 2.0% IN EACH DIRECTION OF TRAVEL. MINIMUM DIMENSIONS 5' x 5'. SEE NOTES.

** MAXIMUM RAMP CROSS SLOPE IS 2.0%. RUNNING SLOPE 5% - 7% (8.3% MAXIMUM). SEE NOTES.

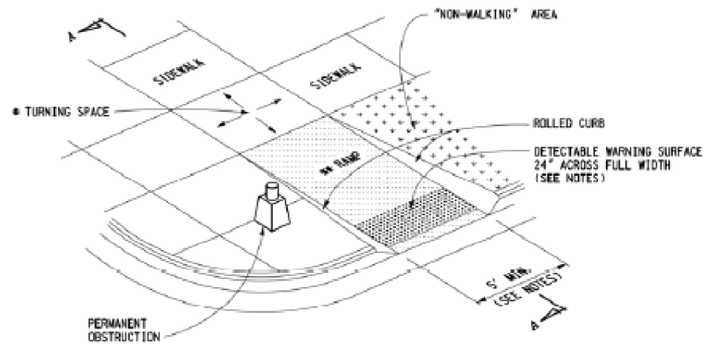

SIDEWALK RAMP TYPE R

(ROLLED SIDES)

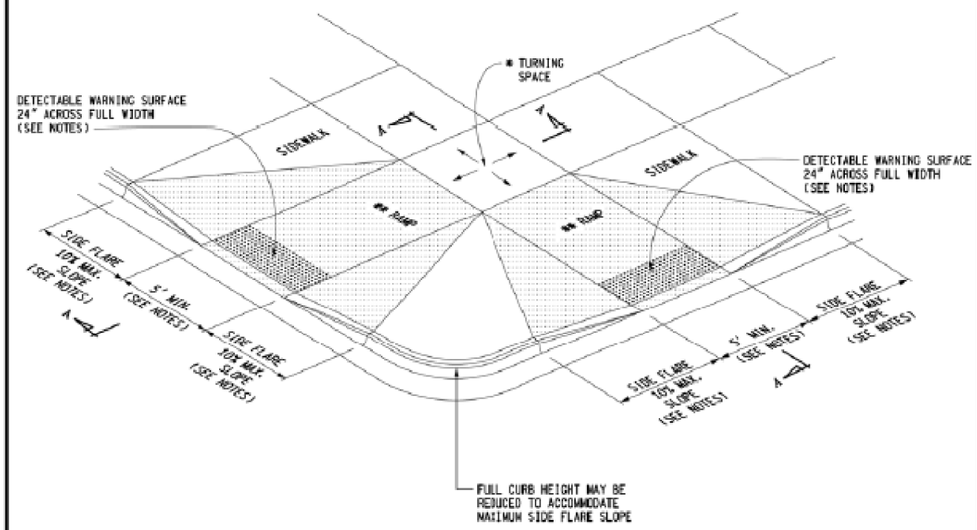

SIDEWALK RAMP TYPE F

(FLARED SIDES, TWO RAMPS SHOWN)

MDOT Michigan Department of Transportation

PREPARED BY DESIGN DIVISION

DRAWN BY: B.L.T.

CHECKED BY: W.K.P.

DEPARTMENT DIRECTOR
Kirk T. Steudle

APPROVED BY: _____ DIRECTOR, BUREAU OF FIELD SERVICES

APPROVED BY: _____ DIRECTOR, BUREAU OF HIGHWAY DEVELOPMENT

MICHIGAN DEPARTMENT OF TRANSPORTATION
BUREAU OF HIGHWAY DEVELOPMENT STANDARD PLAN FOR

SIDEWALK RAMP AND DETECTABLE WARNING DETAILS

9-30-2014	7-1-2014	R-28-I	SHEET 1 OF 7
F.H.W.A. APPROVAL	PLAN DATE		

* MAXIMUM TURNING SPACE SLOPE IS 2.0% IN EACH DIRECTION OF TRAVEL. MINIMUM DIMENSIONS 5' x 5'. SEE NOTES.

** MAXIMUM RAMP CROSS SLOPE IS 2.0%. RUNNING SLOPE 5% - 7% (8.3% MAXIMUM). SEE NOTES.

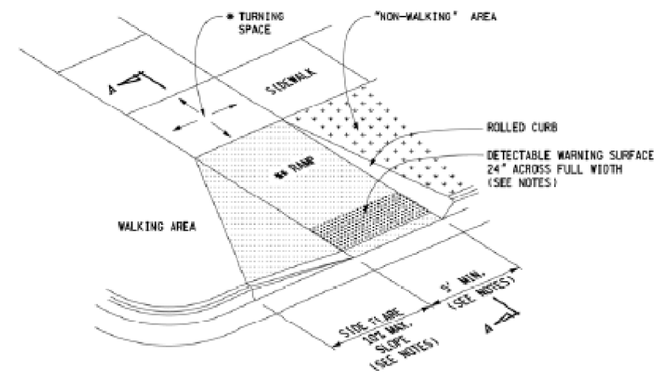

SIDEWALK RAMP TYPE RF

(ROLLED / FLARED SIDES)

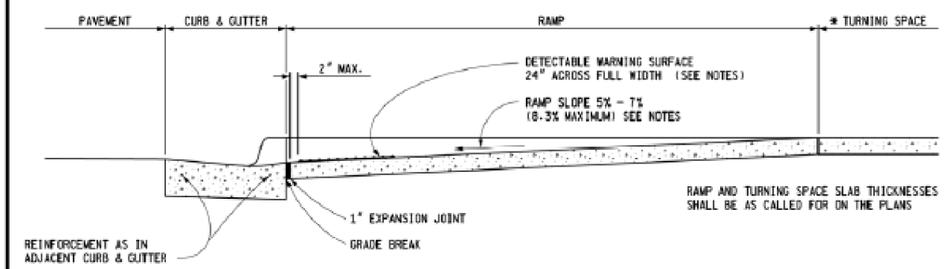

SECTION A-A

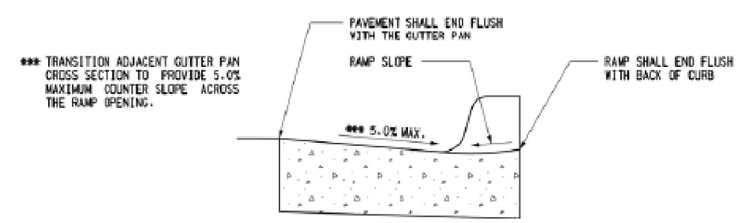

SECTION THROUGH CURB CUT

(TYPICAL ALL RAMP TYPES)

MICHIGAN DEPARTMENT OF TRANSPORTATION
BUREAU OF HIGHWAY DEVELOPMENT STANDARD PLAN FOR

SIDEWALK RAMP AND DETECTABLE WARNING DETAILS

9-30-2014	7-1-2014	R-28-I	SHEET 2 OF 7
F.H.W.A. APPROVAL	PLAN DATE		

NO.	DATE	AUTH	DESCRIPTION

Stantec
Stantec
2194 Commerce Dr.
Ann Arbor, MI U.S.A.
[tel]734.761.1000
[fax]734.761.1200
www.stantec.com

C & A Engineers
119 Pere Marquette Dr.
Lansing, Michigan 48912
(517) 925-6192
(517) 925-6502
www.caengineers@caengineers.com

SIDEWALK RAMP AND DECTECTABLE WARNING DETAILS

DATE: 10-01-15

JN: PERMIT

FILE:

SCALE: NO SCALE

DRAWING

SHEET 45

* MAXIMUM TURNING SPACE SLOPE IS 2.0% IN EACH DIRECTION OF TRAVEL. MINIMUM DIMENSIONS 5' x 5'. SEE NOTES.

** MAXIMUM RAMP CROSS SLOPE IS 2.0%, RUNNING SLOPE 5% - 7% (8.3% MAXIMUM). SEE NOTES.

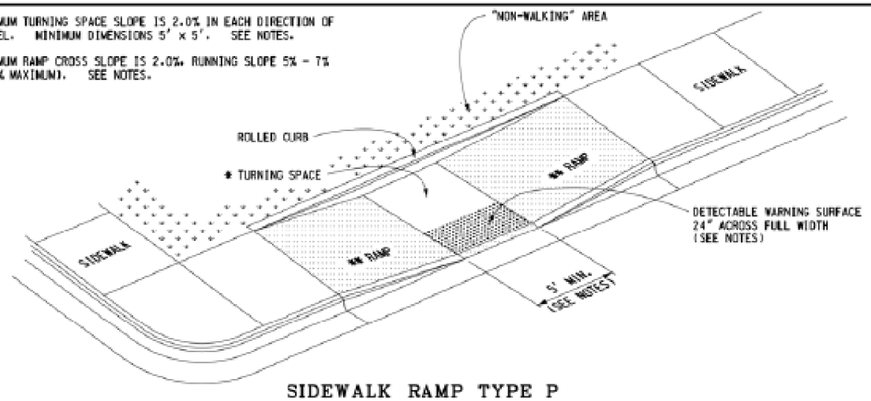

SIDEWALK RAMP TYPE P

(PARALLEL RAMP)
DO NOT USE IN AREAS WHERE PONDING MAY OCCUR

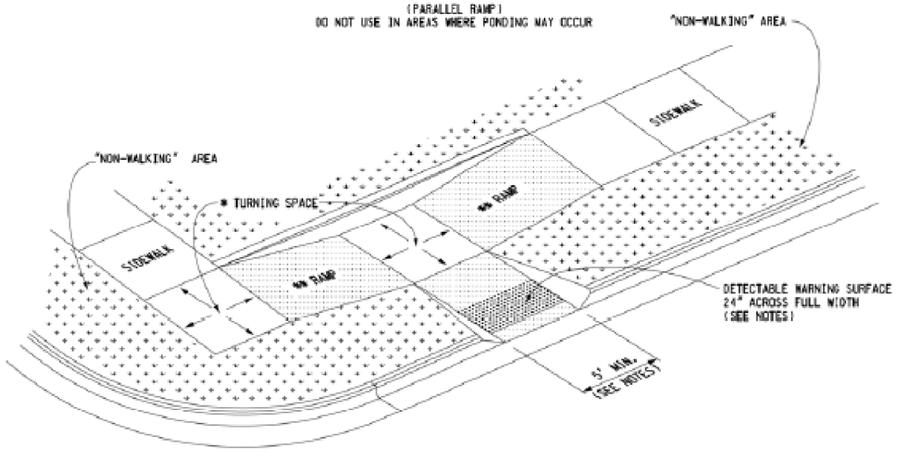

SIDEWALK RAMP TYPE C

(COMBINATION RAMP)

USE 24" DEEP DETECTABLE WARNINGS IF MEDIAN WIDTH IS AT LEAST 6'-0". OTHERWISE NO DETECTABLE WARNING IS REQUIRED.

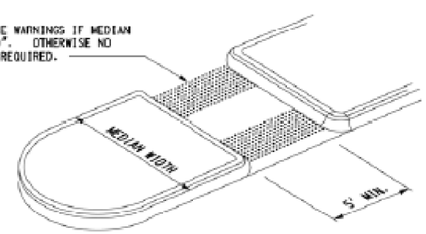

SIDEWALK RAMP TYPE M

(MEDIAN ISLAND)

MICHIGAN DEPARTMENT OF TRANSPORTATION
BUREAU OF HIGHWAY DEVELOPMENT STANDARD PLAN FOR

SIDEWALK RAMP AND DETECTABLE WARNING DETAILS

9-30-2014	7-1-2014	R-28-I	SHEET
F.H.W.A. APPROVAL	PLAN DATE		3 OF 7

* MAXIMUM TURNING SPACE SLOPE IS 2.0% IN EACH DIRECTION OF TRAVEL. MINIMUM DIMENSIONS 5' x 5'. SEE NOTES.

** MAXIMUM RAMP CROSS SLOPE IS 2.0%, RUNNING SLOPE 5% - 7% (8.3% MAXIMUM). SEE NOTES.

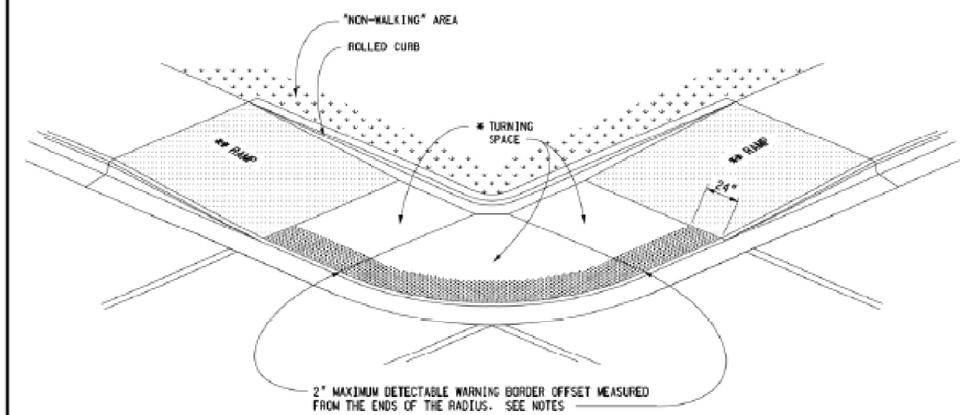

(RADIAL DETECTABLE WARNING SHOWN)

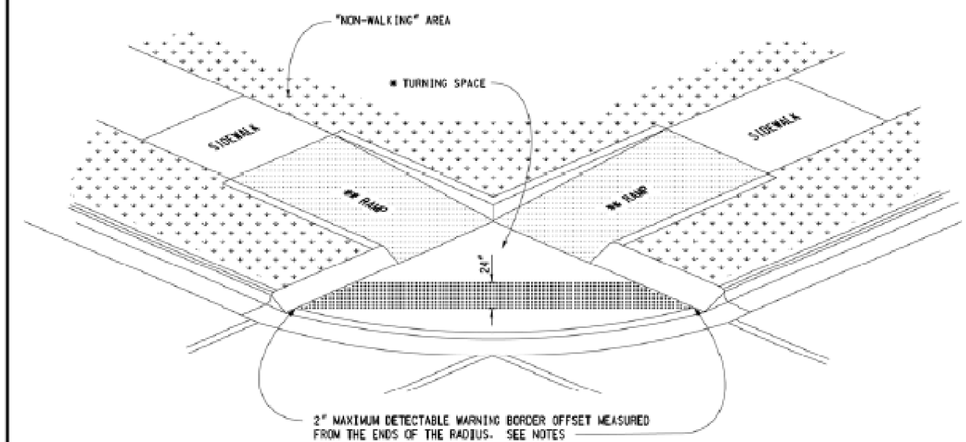

(TANGENT DETECTABLE WARNING SHOWN)

SIDEWALK RAMP TYPE D

(DEPRESSED CORNER)

USE ONLY WHEN INDEPENDENT DIRECTIONAL RAMPS CAN NOT BE CONSTRUCTED FOR EACH CROSSING DIRECTION

MICHIGAN DEPARTMENT OF TRANSPORTATION
BUREAU OF HIGHWAY DEVELOPMENT STANDARD PLAN FOR

SIDEWALK RAMP AND DETECTABLE WARNING DETAILS

9-30-2014	7-1-2014	R-28-I	SHEET
F.H.W.A. APPROVAL	PLAN DATE		4 OF 7

NO.	DATE	AUTH	DESCRIPTION

Stantec
Stantec
2194 Commerce Dr.
Ann Arbor, MI U.S.A.
[tel]734.761.1000
[fax]734.761.1200
www.stantec.com

C & A Engineers
119 Pere Marquette Dr.
Lansing, Michigan 48912 (517) 925-6362
www.cadeng@merit.com

SIDEWALK RAMP AND DECTECTABLE WARNING DETAILS

DATE: 10-01-15
JN: PERMIT
FILE:
SCALE: NO SCALE

DRAWING SHEET 46

* THE DETECTABLE WARNING SURFACE SHALL BE LOCATED SO THAT THE EDGE NEAREST THE RAIL CROSSING IS 6' MINIMUM AND 15' MAXIMUM FROM THE CENTERLINE OF THE NEAREST RAIL. DO NOT PLACE DETECTABLE WARNING ON RAILROAD CROSSING MATERIAL.

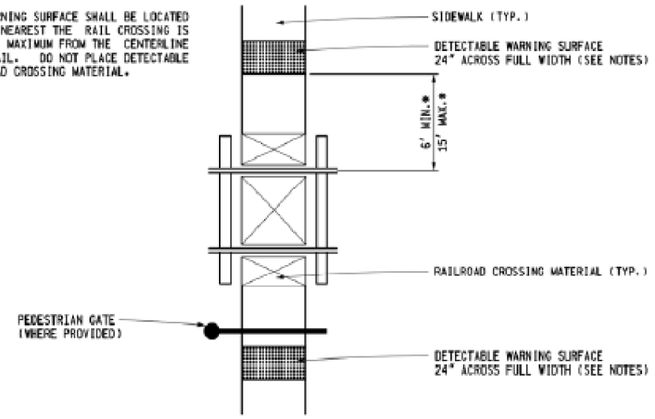

DETECTABLE WARNING AT RAILROAD CROSSING

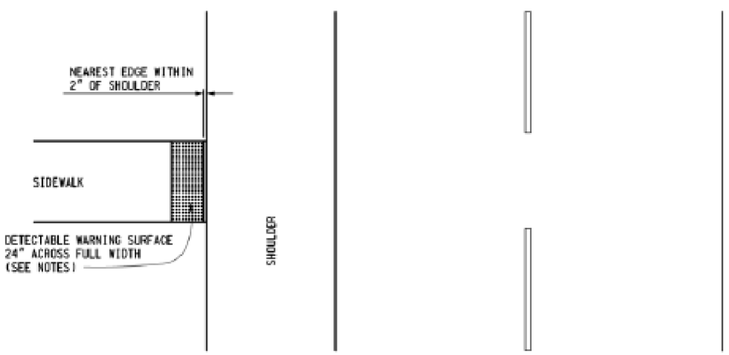

DETECTABLE WARNING AT FLUSH SHOULDER OR ROADWAY

MICHIGAN DEPARTMENT OF TRANSPORTATION
BUREAU OF HIGHWAY DEVELOPMENT STANDARD PLAN FOR

SIDEWALK RAMP AND DETECTABLE WARNING DETAILS

9-30-2014	7-1-2014	R-28-I	SHEET
F.H.W.A. APPROVAL	PLAN DATE		5 OF 7

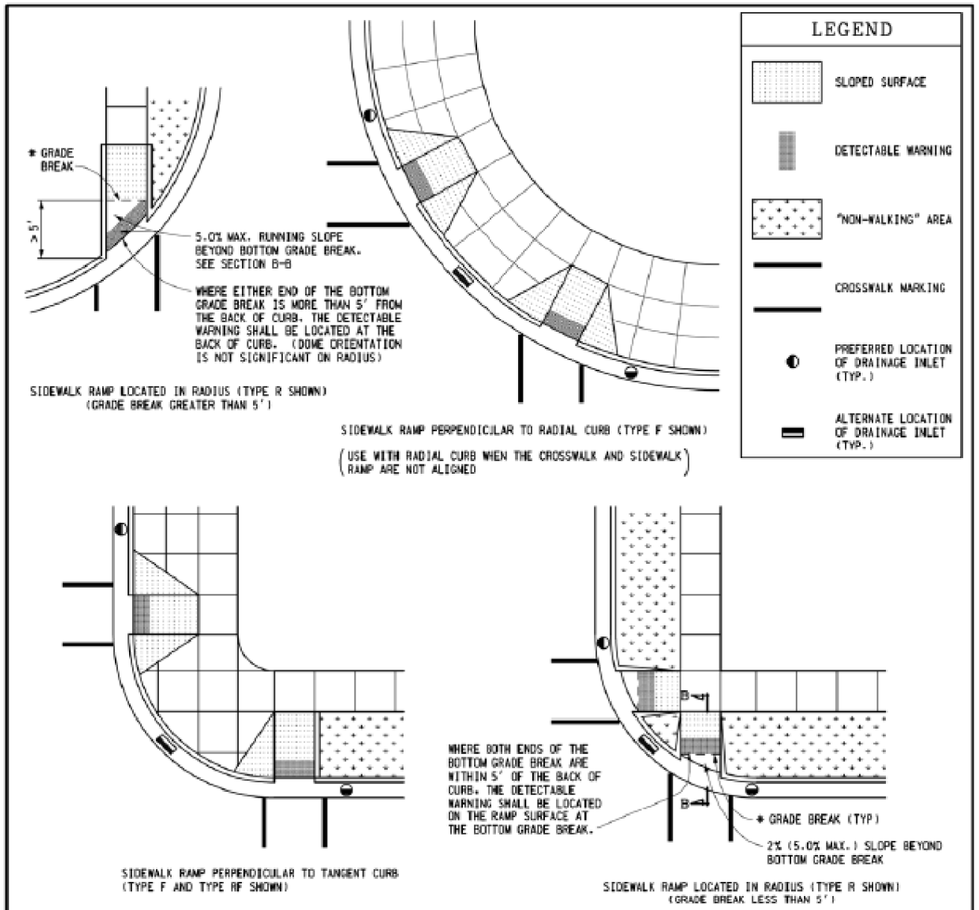

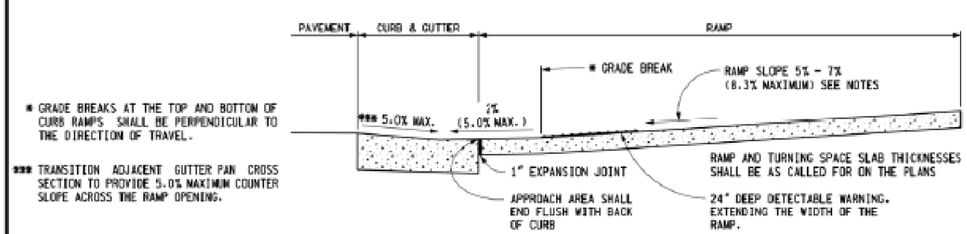

* GRADE BREAKS AT THE TOP AND BOTTOM OF CURB RAMPS SHALL BE PERPENDICULAR TO THE DIRECTION OF TRAVEL.

*** TRANSITION ADJACENT GUTTER PAN CROSS SECTION TO PROVIDE 5.0% MAXIMUM COUNTER SLOPE ACROSS THE RAMP OPENING.

SECTION B-B

SIDEWALK RAMP ORIENTATION

MICHIGAN DEPARTMENT OF TRANSPORTATION
BUREAU OF HIGHWAY DEVELOPMENT STANDARD PLAN FOR

SIDEWALK RAMP AND DETECTABLE WARNING DETAILS

9-30-2014	7-1-2014	R-28-I	SHEET
F.H.W.A. APPROVAL	PLAN DATE		6 OF 7

NO.	DATE	AUTH	DESCRIPTION

Stantec
Stantec
2194 Commerce Dr.
Ann Arbor, MI U.S.A.
[Ph]734.761.1000
[Fax]734.761.1020
www.stantec.com

C & A Engineers
C & A Engineers
119 Pere Marquette Dr.
Lansing, Michigan 48912 (517) 925-6362
www.caengineers@inwarelic.com

SIDEWALK RAMP AND DECTECTABLE WARNING DETAILS

DATE: 10-01-15
JN: PERMIT
FILE:
SCALE: NO SCALE

DRAWING SHEET 47

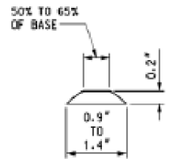

DOME SECTION

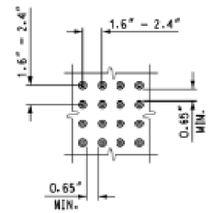

DOME SPACING

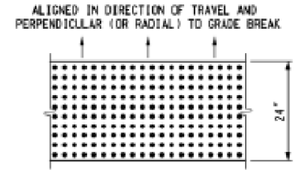

DOME ALIGNMENT

DETECTABLE WARNING DETAILS

NOTES:

DETAILS SPECIFIED ON THIS PLAN APPLY TO ALL CONSTRUCTION, RECONSTRUCTION, OR ALTERATION OF STREETS, CURBS, OR SIDEWALKS IN THE PUBLIC RIGHT OF WAY.

SIDEWALK RAMPS ARE TO BE LOCATED AS SPECIFIED ON THE PLANS OR AS DIRECTED BY THE ENGINEER.

RAMPS SHALL BE PROVIDED AT ALL CORNERS OF AN INTERSECTION WHERE THERE IS EXISTING OR PROPOSED SIDEWALK AND CURB. RAMPS SHALL ALSO BE PROVIDED AT MARKED AND/OR SIGNALIZED MID-BLOCK CROSSINGS.

SURFACE TEXTURE OF THE RAMP SHALL BE THAT OBTAINED BY A COARSE BROOMING, TRANSVERSE TO THE RUNNING SLOPE.

SIDEWALK SHALL BE RAMPED WHERE THE DRIVEWAY CURB IS EXTENDED ACROSS THE WALK.

CARE SHALL BE TAKEN TO ASSURE A UNIFORM GRADE ON THE RAMP. WHERE CONDITIONS PERMIT, IT IS DESIRABLE THAT THE SLOPE OF THE RAMP BE IN ONLY ONE DIRECTION, PARALLEL TO THE DIRECTION OF TRAVEL.

RAMP WIDTH SHALL BE INCREASED, IF NECESSARY, TO ACCOMMODATE SIDEWALK SNOW REMOVAL EQUIPMENT NORMALLY USED BY THE MUNICIPALITY.

PROVIDE TURNING SPACES WHERE PEDESTRIAN TURNING MOVEMENTS ARE REQUIRED.

WHEN 5' MINIMUM WIDTHS ARE NOT FEASIBLE, RAMP WIDTH MAY BE REDUCED TO NOT LESS THAN 4' AND TURNING SPACES TO NOT LESS THAN 4' x 4'.

DETECTABLE WARNING SURFACE COVERAGE IS 24" MINIMUM IN THE DIRECTION OF RAMP/PATH TRAVEL AND THE FULL WIDTH OF THE RAMP/PATH OPENING EXCLUDING CURBED OR FLARED CURB TRANSITION AREAS. A BORDER OFFSET NOT GREATER THAN 2" MEASURED ALONG THE EDGES OF THE DETECTABLE WARNING IS ALLOWABLE. FOR RADIAL CURB THE OFFSET IS MEASURED FROM THE ENDS OF THE RADIUS.

FOR NEW ROADWAY CONSTRUCTION, THE RAMP CROSS SLOPE MAY NOT EXCEED 2.0%. FOR ALTERATIONS TO EXISTING ROADWAYS, THE CROSS SLOPE MAY BE TRANSITIONED TO MEET AN EXISTING ROADWAY GRADE. THE CROSS SLOPE TRANSITION SHALL BE APPLIED UNIFORMLY OVER THE FULL LENGTH OF THE RAMP.

THE MAXIMUM RUNNING SLOPE OF 8.3% IS RELATIVE TO A FLAT (0%) REFERENCE. HOWEVER, IT SHALL NOT REQUIRE ANY RAMP OR SERIES OF RAMPS TO EXCEED 15 FEET IN LENGTH.

DRAINAGE STRUCTURES SHOULD NOT BE PLACED IN LINE WITH RAMPS. THE LOCATION OF THE RAMP SHOULD TAKE PRECEDENCE OVER THE LOCATION OF THE DRAINAGE STRUCTURE. WHERE EXISTING DRAINAGE STRUCTURES ARE LOCATED IN THE RAMP PATH OF TRAVEL, USE A MANUFACTURER'S ADA COMPLIANT GRATE. OPENINGS SHALL NOT BE GREATER THAN ½". ELONGATED OPENINGS SHALL BE PLACED SO THAT THE LONG DIMENSION IS PERPENDICULAR TO THE DOMINANT DIRECTION OF TRAVEL.

TRANSITION THE GUTTER PAN CROSS SECTION SUCH THAT THE COUNTER SLOPE IN THE DIRECTION OF RAMP TRAVEL IS NOT GREATER THAN 5.0%. MAINTAIN THE NORMAL GUTTER PAN CROSS SECTION ACROSS DRAINAGE STRUCTURES.

THE TOP OF THE JOINT FILLER FOR ALL RAMP TYPES SHALL BE FLUSH WITH THE ADJACENT CONCRETE.

CROSSWALK AND STOP LINE MARKINGS, IF USED, SHALL BE SO LOCATED AS TO STOP TRAFFIC SHORT OF RAMP CROSSINGS. SPECIFIC DETAILS FOR MARKING APPLICATIONS ARE GIVEN IN THE "MICHIGAN MANUAL OF UNIFORM TRAFFIC CONTROL DEVICES".

FLARED SIDES WITH A SLOPE OF 10% MAXIMUM, MEASURED ALONG THE ROADSIDE CURB LINE, SHALL BE PROVIDED WHERE AN UNOBSTRUCTED CIRCULATION PATH LATERALLY CROSSES THE SIDEWALK RAMP. FLARED SIDES ARE NOT REQUIRED WHERE THE RAMP IS BORDERED BY LANDSCAPING, UNPAVED SURFACE OR PERMANENT FIXED OBJECTS. WHERE THEY ARE NOT REQUIRED, FLARED SIDES CAN BE CONSIDERED IN ORDER TO AVOID SHARP CURB RETURNS AT RAMP OPENINGS.

DETECTABLE WARNING PLATES MUST BE INSTALLED USING FABRICATED OR FIELD CUT UNITS CAST AND/OR ANCHORED IN THE PAVEMENT TO RESIST SHIFTING OR HEAVING.

MICHIGAN DEPARTMENT OF TRANSPORTATION
BUREAU OF HIGHWAY DEVELOPMENT STANDARD PLAN FOR

SIDEWALK RAMP AND DETECTABLE WARNING DETAILS

9-30-2014	T-1-2014	R-28-I	SHEET
F.H.W.A. APPROVAL	PLAN DATE		7 OF 7

NO.	DATE	AUTH	DESCRIPTION

Stantec
Stantec
2194 Commerce Dr.
Ann Arbor, MI U.S.A.
Tel:734.761.1000
Fax:734.761.1200
www.stantec.com

C & A Engineers
119 Pere Marquette Dr.
Lansing, Michigan 48912 (517) 925-6362
www.caengineers.com/mail@caengineers.com

SIDEWALK RAMP AND DECTECTABLE WARNING DETAILS
DATE:10-01-15
JN: PERMIT
FILE:
SCALE: NO SCALE

DRAWING SHEET
48

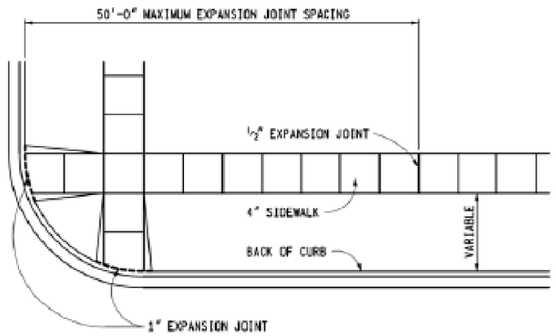

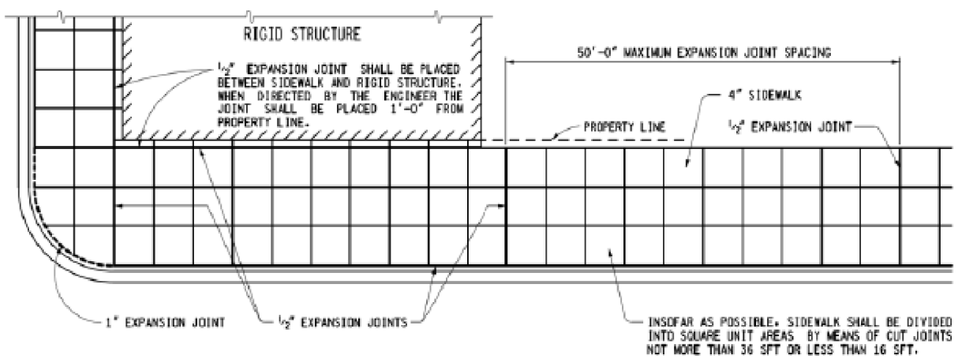

LOCATION OF JOINTS IN CONCRETE SIDEWALK

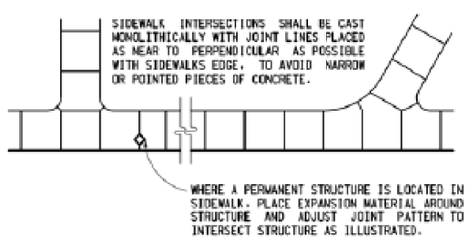

TYPICAL SIDEWALK JOINT LAYOUTS

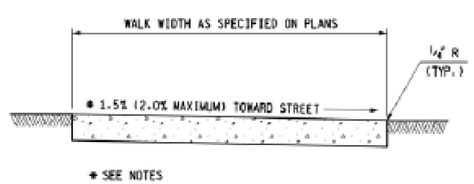

4" CONCRETE SIDEWALK

MDOT Michigan Department of Transportation

PREPARED BY DESIGN DIVISION

DRAWN BY: B.L.T.

CHECKED BY: W.K.P.

DEPARTMENT DIRECTOR
Kirk T. Steudle

APPROVED BY: DIRECTOR, BUREAU OF FIELD SERVICES

APPROVED BY: DIRECTOR, BUREAU OF HIGHWAY DEVELOPMENT

MICHIGAN DEPARTMENT OF TRANSPORTATION
BUREAU OF HIGHWAY DEVELOPMENT STANDARD PLAN FOR

DRIVEWAY OPENINGS & APPROACHES, AND CONCRETE SIDEWALK

9-30-2014	7-1-2014	R-29-I	SHEET
F.H.W.A. APPROVAL	PLAN DATE		1 OF 4

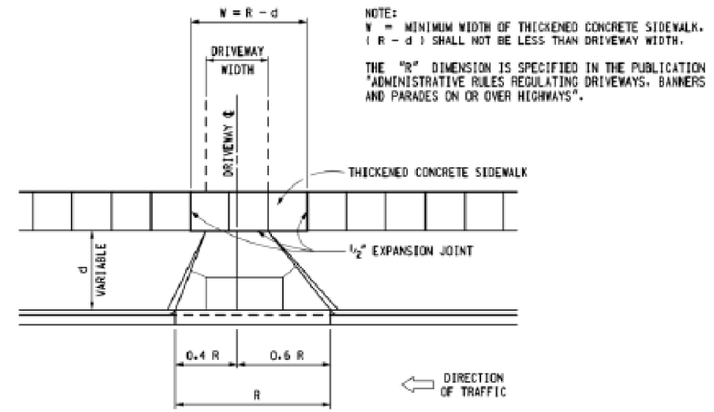

NOTE:
W = MINIMUM WIDTH OF THICKENED CONCRETE SIDEWALK.
(R - d) SHALL NOT BE LESS THAN DRIVEWAY WIDTH.

THE "R" DIMENSION IS SPECIFIED IN THE PUBLICATION "ADMINISTRATIVE RULES REGULATING DRIVEWAYS, BANNERS AND PARADES ON OR OVER HIGHWAYS".

CONCRETE DRIVEWAY OPENING LAYOUT

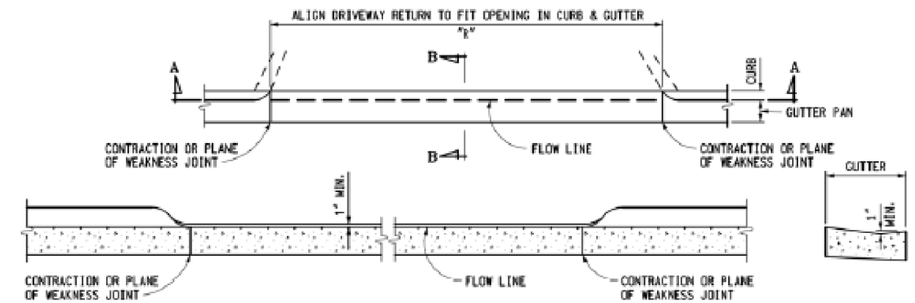

SECTION A - A

SECTION B - B

CONCRETE DRIVEWAY OPENING, DETAIL L

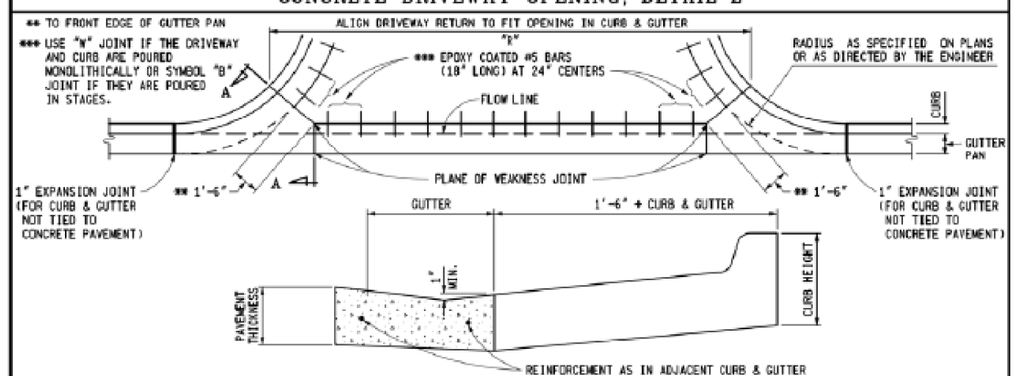

SECTION A - A

CONCRETE DRIVEWAY OPENING, DETAIL M

NOTE:
FOR ROADWAYS WITH CONCRETE PAVEMENTS, LONGITUDINAL LANE TIES WILL BE CONTINUOUS THROUGH THE DRIVEWAY OPENING AND THE SPACING OF THE #5 BARS IN CONCRETE DRIVEWAYS SHALL BE ADJUSTED TO AVOID CONFLICT WITH THE LONGITUDINAL LANE TIES.

MICHIGAN DEPARTMENT OF TRANSPORTATION
BUREAU OF HIGHWAY DEVELOPMENT STANDARD PLAN FOR

DRIVEWAY OPENINGS & APPROACHES, AND CONCRETE SIDEWALK

9-30-2014	7-1-2014	R-29-I	SHEET
F.H.W.A. APPROVAL	PLAN DATE		2 OF 4

NO.	DATE	AUTH	DESCRIPTION

Stantec
Stantec
2194 Commerce Dr.
Ann Arbor, MI U.S.A.
[tel]734.761.1000
[fax]734.761.1020
www.stantec.com

C & A Engineers
119 Pere Marquette Dr.
Lansing, Michigan 48912 (517) 925-6362
www.caengineers.com

DRIVEWAY OPENINGS & APPROACHES & CONCRETE SIDEWALK

DATE: 10-01-15

JN: PERMIT

FILE:

SCALE: NO SCALE

DRAWING

SHEET 49

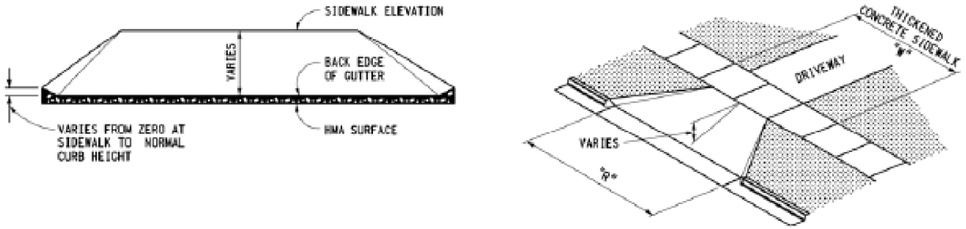

HMA DRIVEWAY APPROACH

(TO BE USED WITH DETAIL L)

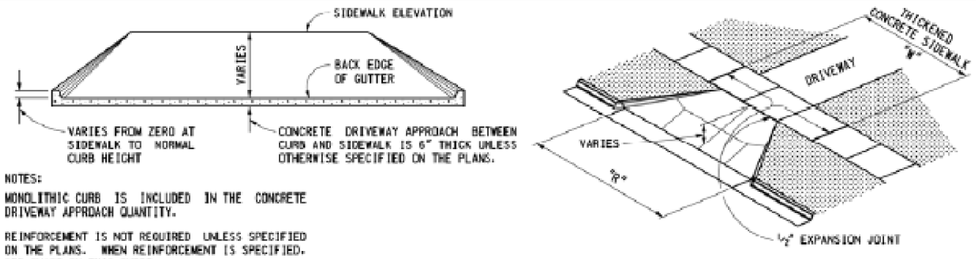

NOTES:

MONOLITHIC CURB IS INCLUDED IN THE CONCRETE DRIVEWAY APPROACH QUANTITY.

REINFORCEMENT IS NOT REQUIRED UNLESS SPECIFIED ON THE PLANS. WHEN REINFORCEMENT IS SPECIFIED, SEE CHART ON THIS SHEET.

CONCRETE DRIVEWAY APPROACH

(TO BE USED WITH DETAIL L OR M)

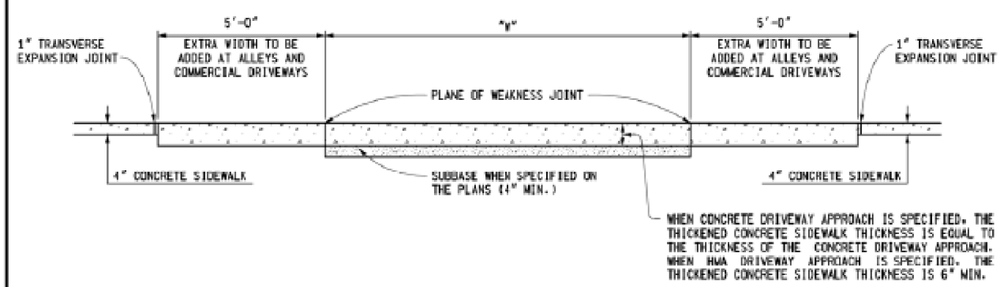

WHEN CONCRETE DRIVEWAY APPROACH IS SPECIFIED, THE THICKENED CONCRETE SIDEWALK THICKNESS IS EQUAL TO THE THICKNESS OF THE CONCRETE DRIVEWAY APPROACH. WHEN HMA DRIVEWAY APPROACH IS SPECIFIED, THE THICKENED CONCRETE SIDEWALK THICKNESS IS 6" MIN.

THICKENED CONCRETE SIDEWALK

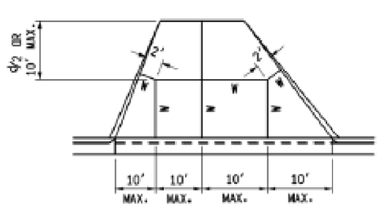

ADJUST DRIVEWAY JOINTS AS NEEDED TO ALIGN WITH ANY COINCIDING TRANSVERSE PAVEMENT JOINTS.

JOINT LAYOUT IS AS INDICATED OR AS DIRECTED BY THE ENGINEER.

INTERMEDIATE DRIVEWAY JOINT DETAILS

REINFORCEMENT FOR CONCRETE DRIVEWAYS		
CONCRETE DRIVEWAY THICKNESS	WIRE SIZE (6" x 6" MESH)	AVERAGE WEIGHT (LBS/100 SFT)
LESS THAN 8"	W1.4	21
	W2.9	42
8" OR GREATER	USE WIRE FABRIC REINFORCEMENT SPECIFIED ON STANDARD PLAN R-37-SERIES	

MICHIGAN DEPARTMENT OF TRANSPORTATION
BUREAU OF HIGHWAY DEVELOPMENT STANDARD PLAN FOR

DRIVEWAY OPENINGS & APPROACHES, AND CONCRETE SIDEWALK

9-30-2014	7-1-2014	R-29-I	SHEET 3 OF 4
F.H.W.A. APPROVAL	PLAN DATE		

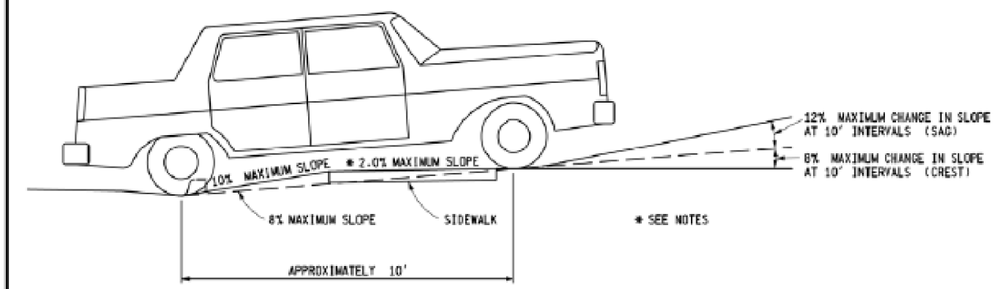

LOW VOLUME COMMERCIAL OR RESIDENTIAL DRIVEWAY SLOPES

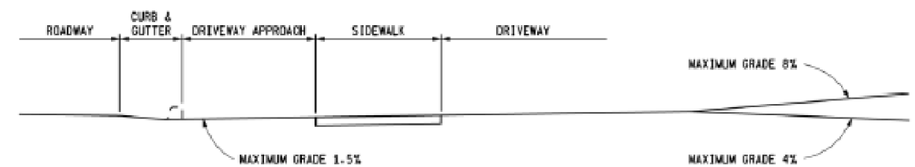

COMMERCIAL DRIVEWAY PROFILE FOR MAJOR TRAFFIC GENERATORS

NOTES:

FOR DRIVEWAY DESIGN REFER ALSO TO "ADMINISTRATIVE RULES REGULATING DRIVEWAYS, BANNERS, AND PARADES ON OR OVER HIGHWAYS" AND GEOMETRIC DESIGN G-680-SERIES, COMMERCIAL DRIVEWAYS.

FOR CURB AND GUTTER DETAILS, SEE STANDARD PLAN R-30-SERIES.

TRANSVERSE SIDEWALK SLOPES ARE TYPICALLY 1.5% (2.0% MAXIMUM). IN ORDER TO MEET SITE CONDITIONS, IF THE TRANSVERSE SLOPE IS REQUIRED TO BE LESS THAN 1.5%, LONGITUDINAL DRAINAGE MUST BE PROVIDED.

WHEN SETTING GRADES FOR COMMERCIAL DRIVES, THE TYPES OF VEHICLES USING THE DRIVE SHOULD BE CONSIDERED.

MICHIGAN DEPARTMENT OF TRANSPORTATION
BUREAU OF HIGHWAY DEVELOPMENT STANDARD PLAN FOR

DRIVEWAY OPENINGS & APPROACHES, AND CONCRETE SIDEWALK

9-30-2014	7-1-2014	R-29-I	SHEET 4 OF 4
F.H.W.A. APPROVAL	PLAN DATE		

NO.	DATE	AUTH	DESCRIPTION

Stantec
Stantec
2194 Commons Pt.
East Lansing, MI U.S.A.
[tel]517.336.5500
[fax]517.336.1200
www.stantec.com

C & A Engineers
119 Pere Marquette Dr.
Lansing, Michigan 48912
(517) 925-0362
www.caengineers@comcastnet.com

DRIVEWAY OPENINGS & APPROACHES & CONCRETE SIDEWALK

DATE: 10-01-15 | JN: PERMIT

FILE: | SCALE: NO SCALE

DRAWING | SHEET 50