Street Lighting: Neighborhood-Wide

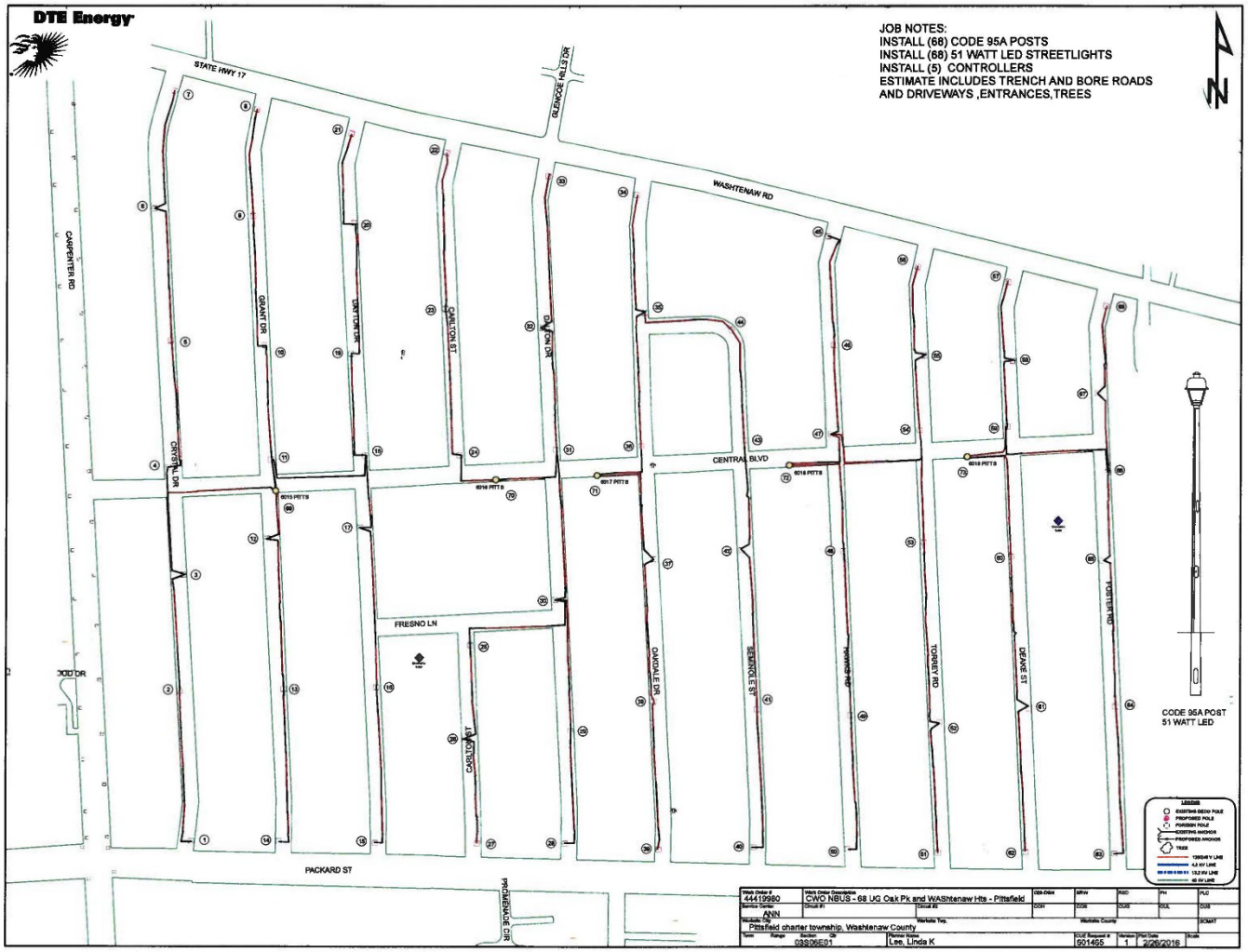

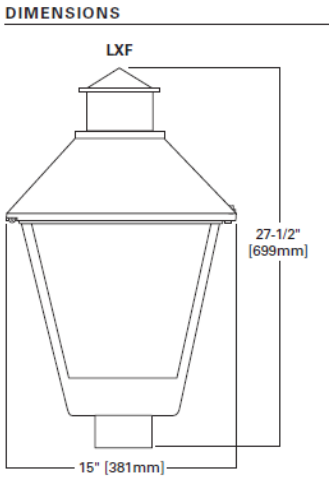

Cost: $354,320.00

Annual Operating Cost: $19,724.00