ARBOR FARMS PHASE 2

PART OF THE N.W. 1/4 OF SECTION 26, T.3S., R.6E.,
PITTSFIELD TOWNSHIP, WASHTENAW COUNTY, MICHIGAN
A 59 LOT, SINGLE–FAMILY SITE CONDOMINIUM
L–12–26–200–026

200 100 0 200 400 600
SCALE IN FEET 1"=200'

DESCRIPTION OF ARBOR FARMS

COMPRISED OF PART OF TAX PARCEL L–12–26–200–026
PART OF THE N.W. 1/4 OF SECTION 26, T. 3 S., R. 6 E., PITTSFIELD TOWNSHIP, WASHTENAW COUNTY, MICHIGAN, DESCRIBED AS FOLLOWS:

COMMENCING AT THE WEST 1/4 CORNER OF SECTION 26, TOWN 3 SOUTH, RANGE 6 EAST; THENCE N88°27'43"E, 1690.98 FEET ALONG THE EAST AND WEST 1/4 LINE OF SAID SECTION 26, ALSO IN PART ALONG THE SOUTHERLY BOUNDARY OF "ROLLING MEADOW ESTATES SUB'N NO. 1" (LIBER 28, PAGE 92–94, WASHTENAW COUNTY RECORDS) AND ALSO IN PART ALONG THE SOUTHERLY BOUNDARY OF "ROLLING MEADOW ESTATES SUB'N NO. 2 (LIBER 30, PAGES 1 & 2, WASHTENAW COUNTY RECORDS) TO THE POINT OF BEGINNING; THENCE N55°54'57"W, 237.81 FEET; THENCE N38°15'35"E, 86.50 FEET; THENCE N28°27'43"E, 185.14 FEET; THENCE N71°30'23"E, 42.98 FEET; THENCE N88°27'43"E, 78.09 FEET; THENCE S76°26'22"E, 40.49 FEET; THENCE N26°18'42"E, 187.84 FEET TO THE BEGINNING OF A NON–TANGENT CURVE CONCAVE TO THE SOUTH, HAVING A RADIUS OF 263.00 FEET, TO WHICH BEGINNING A RADIAL LINE BEARS N26°18'42"E, THENCE WESTERLY, 54.54 FEET ALONG THE ARC OF SAID CURVE, THROUGH A CENTRAL ANGLE OF 11°52'58" (THE CHORD OF SAID CURVE BEARS N69°37'47"W, 54.45 FEET); THENCE N14°25'45"E, 131.94 FEET; THENCE S63°48'55"E, 199.11 FEET; THENCE N00°55'49"W, 201.47 FEET; THENCE N09°59'51"E, 86.54 FEET; THENCE N22°22'49"E, 86.44 FEET; THENCE N35°20'21"E, 86.44 FEET; THENCE N48°17'53"E, 86.44 FEET; THENCE N61°15'25"E, 86.44 FEET; THENCE N74°12'57"E, 86.44 FEET; THENCE N84°51'33"E, 55.62 FEET; THENCE N89°04'11"E, 229.31 FEET TO THE NORTH AND SOUTH 1/4 LINE OF SAID SECTION 26; THENCE ALONG SAID LINE S00°55'49"E 1140.01 FEET TO THE EAST AND WEST 1/4 LINE AND CENTER 1/4 CORNER OF SAID SECTION 26; THENCE ALONG SAID LINE S88°27'43"W, 968.51 FEET TO THE POINT OF BEGINNING. CONTAINING 20.5137 ACRES OF LAND.

DEVELOPMENT NARRATIVE

Pittsfield Land LLC is proposing to develop 59 single family lots on 20.5 acres of property located east of Platt Road, and South of Michigan Avenue and Textile Road, adjacent to Phase 1 of Arbor Farms. The property is currently zoned P.U.D. and master planned as Suburban Residential.

The development will contain 59 single family lots ranging from 7,887 to 14,366 square feet in size, which will contain houses ranging from 1,880 to 2,519 square feet in size, and are the same models as offered in Phase 1 of Arbor Farms.

The existing parcel contains areas of natural features that have been incorporated into the layout. The site was designed to minimize impacts to the existing woodland and wetlands.

The development will contain private roads which have been modified slightly from the township's adopted 55' private road cross section, to provide a wider road easement to facilitate the placing of the utilities. The site is proposed to be serviced with public sewer and water, both located adjacent and on the proposed development. Stormwater management is proposed to be addressed through modification of the existing detention basin to meet county design requirements.

SITE DATA TABLE

Present Zoning	P.U.D.	
Gross Area	893,578 sf	20.51 ac
Area in Street ROW/Easement	153,634 sf	3.53 ac
Park Areas	227,609 sf	5.23 ac
Net Lot Area	512,335 sf	11.76 ac
Number of Lots	59 Single Family Units	
Proposed Lot Density	2.9 lots/acre	
Average Lot Area	8,684 sf	0.20 ac
Required Minimum Lot Area	7,800 sf	0.18 ac
Required Minimum Lot Width	65 ft	
Minimum Front Yard Setback	25 ft	
Minimum Rear Yard Setback	30 ft	
Minimum Side Yard Setback	5 ft	
Ground Floor Area	115,793 sf	
Total Floor Area	178,451 sf	
Lot Coverage	22.60 %	
Impervious Surface (total)	255,809 sf	5.87 ac
Percent Imperviousness	49.93 %	
Floor Area Ratio	34.83 %	
Building Height (feet)	32 ft	
Building Height (floors)	2 floors	

ESTIMATED QUANTITIES

SANITARY SEWER

	ITEM	QTY	UNIT
1	10" PVC SDR 26	2482	L.F.
2	6" SCH 40 PVC PIPE	2334	L.F.
3	4' DIA MANHOLES	14	EA.

WATER MAIN

	ITEM	QTY	UNIT
1	8" D.I. CL. 54 W.M.	1325	L.F.
2	HYD. ON 8"	3	EA.
3	8" GATE VALVE & WELL	2	EA.
4	12" GATE VALVE & WELL	4	EA.
5	12" D.I. CL. 54 W.M.	1419	L.F.
6	HYD. ON 12"	3	EA.
7	8" TSV + W	1	EA.
8	1" TYPE K LEDS	59	EA.

STORM SEWER

	ITEM	QTY	UNIT
1	12" C76 CLIV	2027	L.F.
2	15" C76 CLIV	983	L.F.
3	18" C76 CLIV	241	L.F.
4	21" C76 CLIV	1319	L.F.
5	24" C76 CLIV	52	L.F.
6	30" C76 CLIV	335	L.F.
7	36" C76 CLIV	59	L.F.
8	3" LEADS	500	L.F.
9	2' DIA INLET	10	EA.
10	4' DIA STRUCTURE	32	EA.
11	5' DIA STRUCTURE	22	EA.
12	6' DIA STRUCTURE	1	EA.

PAVING

	ITEM	QTY	UNIT
1	1.5" HMA TOP COURSE	7863	SY
2	1.5" HMA LEVELING COURSE	7863	SY
3	2" HMA BASE COURSE	7863	SY
4	10" MDOT 21AA BASE	9830	SY
5	MDOT F4 CURB & GUTTER	5068	LF
6	CONTINUOUS UNDERDRAIN W/SOCK	5068	LF

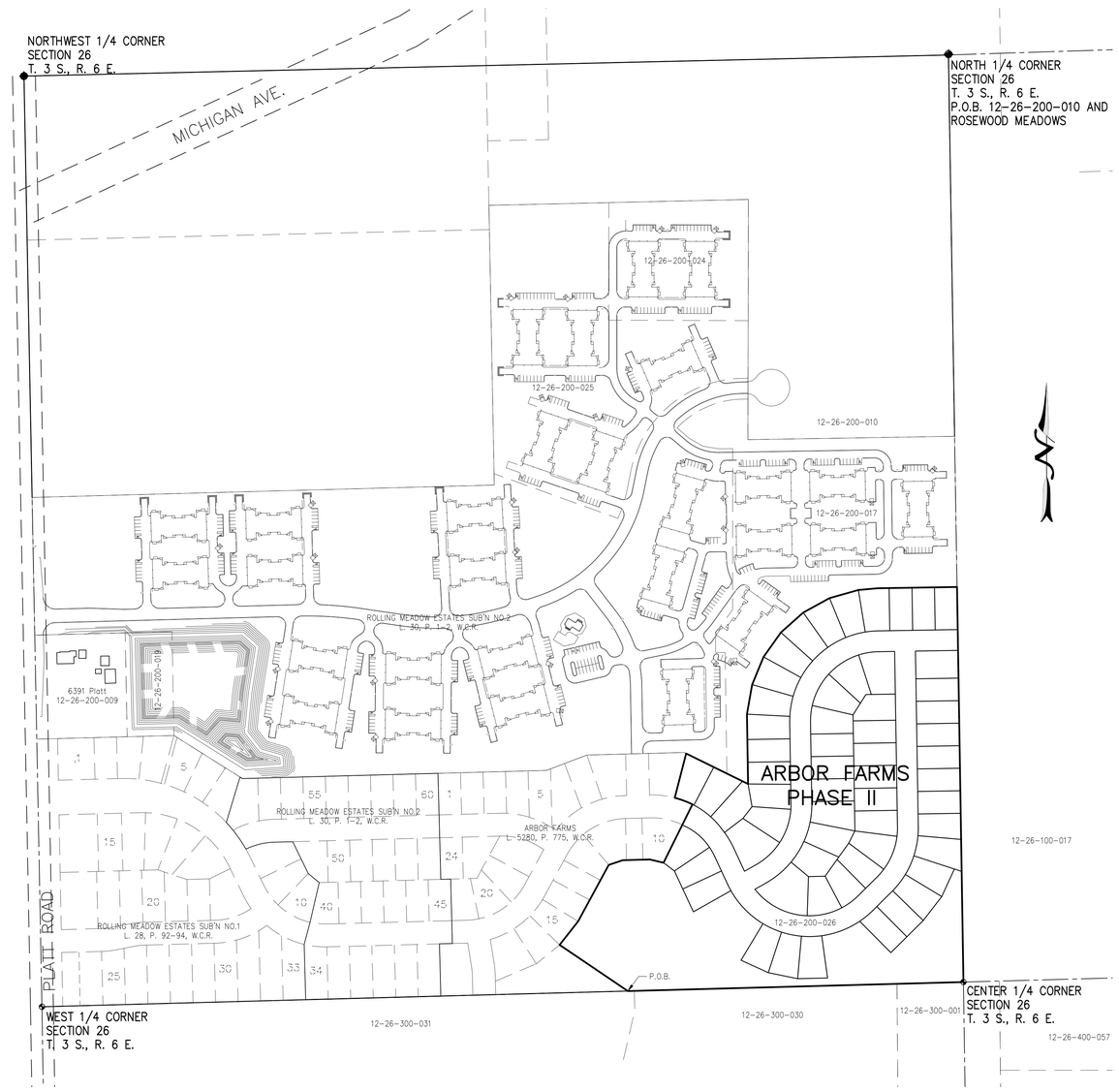

VICINITY MAP
SCALE: 1" = 200'

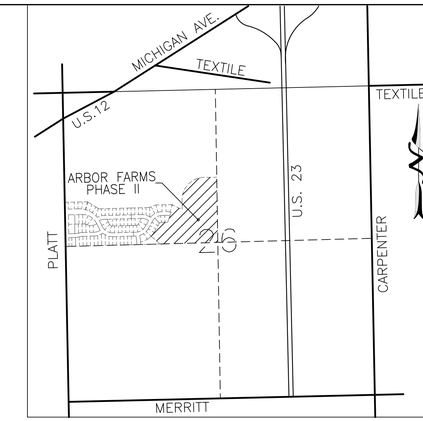

VICINITY MAP
SCALE: 1" = 1000'

SHEET INDEX

01 COVER SHEET
02 EXISTING CONDITIONS
03 TREE & NATURAL FEATURES PLAN – SOUTH
04 TREE & NATURAL FEATURES PLAN – NORTH
05 TREE SCHEDULE
06 SITE PLAN – OVERALL
07 SITE PLAN – SOUTH
08 SITE PLAN – NORTH
09 SOIL EROSION & SEDIMENTATION CONTROL – SOUTH
10 SOIL EROSION & SEDIMENTATION CONTROL – NORTH
11 GRADE PLAN – SOUTH
12 GRADE PLAN – NORTH
13 GENERAL DEVELOPMENT PLAN – SOUTH
14 GENERAL DEVELOPMENT PLAN – NORTH & CROSSING TABLE
15 PLAN & PROFILE – ROLLING MEADOW
16 PLAN & PROFILE – ROLLING MEADOW
17 PLAN & PROFILE – HAWTHORNE
18 PLAN & PROFILE – HAWTHORNE
19 PAVING DETAILS
20 STORM SEWER PROFILES
21 STORM SEWER PROFILES & STRUCTURE SCHEDULE
22 EASEMENT PLAN
23 WETLAND MITIGATION
24 STORM SEWER CALCULATIONS
25 DETENTION BASIN – OVEALL DRAINAGE AREA MAP
26 DETENTION BASIN – SITE DRAINAGE AREA
27 INFILTRATION BASIN CALCULATIONS
28 DETENTION BASIN CALCULATIONS
29 FIRE PROTECTION PLAN

ATTACHMENTS
30 LANDSCAPE PLANTING PLAN

PITTSFIELD TOWNSHIP STANDARD DETAILS
31 SOIL EROSION DETAILS AND NOTES
32 EARTHWORK SPECIFICATIONS
33 SANITARY SEWER DETAILS
34 SANITARY SEWER SPECIFICATIONS
35 WATER MAIN DETAILS
36 WATER MAIN SPECIFICATIONS
37 STORM SEWER DETAILS
38 SIDEWALK DETAILS

NOTES:
1. TO MATCH ADJACENT PLAN SETS AND UTILITY INFORMATION, ALL ELEVATIONS IN THE NGVD 29 DATUM. SUBTRACT 0.40' TO CONVERT TO NAVD 88 DATUM

SURVEYOR:

MICHAEL L. PRIEST, PE, PS
MICHAEL L. PRIEST & ASSOCIATES, INC.
40655 KOPPERNICK ROAD
CANTON, MICHIGAN 48187

DEVELOPER:

PITTSFIELD LAND LLC
23370 COMMERCE DRIVE
FARMINGTON HILLS, MI 48335

PROPERTY OWNER

ROCK PITTSFIELD LLC
100 GALLERIA OFFICENTRE, STE 419
SOUTHFIELD, MI 48034

C.S.P.A. #19–05
ARBOR FARMS PHASE 2

COVER SHEET

ARBOR FARMS PHASE 2
CONSTRUCTION PLANS
PART OF THE NORTHWEST 1/4 OF SECTION 26, T.3S., R.6E.,
PITTSFIELD TOWNSHIP, WASHTENAW COUNTY, MICHIGAN

SHEET 01

ENGINEERS, SURVEYORS
MLP
AND ASSOCIATES, INC.
Michael L. Priest & Associates, Inc.
40655 Koppernick Road, Canton, MI 48187
phone: (734) 459–8560
fax: (734) 459–2585

STATUS:

REVISIONS	
09–27–19	PER TWSP. & WCWRC
10–02–19	PER TWP. ENG. REVIEW LETTER
10–18–19	PER TWP. ENG. REVIEW LETTER
10–28–19	PER TWP. ENG. REVIEW LETTER

JOB NO. 9525.4.18

DATE: 07–10–2019
PM: GMS
ENG: GMS
SURV: AEC
CAD: ADB
\DWG\9525.dwg
XC:ALTA\U.S.C. & G.S.
SCALE: 1" = 200'

APPLICANT
PITTSFIELD LAND LLC
23370 COMMERCE DRIVE
FARMINGTON HILLS, MI 48335
248–921–3996
ATTN: JEFF KATZEN

60 30 0 60 120 180

SCALE IN FEET 1"=60'

BENCHMARKS (NGVD 29):

1. "X" ON TOP OF PUMPER NOZZLE ARM, NORTH SIDE OF ROLLING MEADOW LANE, LOT 8 OF ARBOR FARMS #1 ELEV = 844.36
2. "X" ON TOP OF PUMPER NOZZLE ARM, NORTH SIDE OF ROLLING MEADOW LANE, LOT 9 OF ARBOR FARMS #1 ELEV = 843.16

TO MATCH ADJACENT PLAN SETS AND UTILITY INFORMATION, ALL ELEVATIONS ARE IN THE NGVD 29 DATUM. SUBTRACT 0.40' TO CONVERT TO NAVD 88 DATUM.

NO REGULATED FLOODPLAIN EXISTS ON THE SITE, PER FEMA MAP PANEL 26161C0405E, EFFECTIVE DATE 4/3/2012.

LEGEND:

SANITARY
STORM
WATER MAIN
GAS LINE
BP PIPELINE
DITCH/SWALE
RIGHT-OF-WAY
EASEMENT
WOODLAND
WETLANDS & BUFFER
SOIL TYPE

EXISTING CONDITIONS

ARBOR FARMS PHASE 2

CONSTRUCTION PLANS

PART OF THE NORTHWEST 1/4 OF SECTION 26, T.3S., R.6E., PITTSFIELD TOWNSHIP, WASHTENAW COUNTY, MICHIGAN

SHEET 02

APPLICANT

PITTSFIELD LAND LLC
23370 COMMERCE DRIVE
FARMINGTON HILLS, MI 48335
248-921-3996
ATTN: JEFF KATZEN

DATE: 07-10-2019
PM: GMS
ENG: D.M.W.S.
SURV: AEC
CAD: AGB
\DWG\9525.dwg
\XDATA\M.U.S.C. & G.S.
SCALE: 1" = 60'

STATUS:

JOB NO. 9525.4.18

REVISIONS
10-02-19 PER TWSP. & WCWRC LETTER
10-02-19 PER TWP. ENG REVIEW LETTER
10-28-19 PER TWP. ENG REVIEW LETTER
10-28-19 PER TWP. ENG REVIEW LETTER

ENGINEERS, SURVEYORS
MLP
AND ASSOCIATES, INC.
Michael L. Priest & Associates, Inc.
40655 Koppernick Road, Canton, MI 48187
phone: (734) 459-8560
fax: (734) 459-2585

NOTES:
EXCAVATED SOILS FROM BASEMENTS AND OTHER NECESSARY GRADING SHALL NOT BE TEMPORARILY OR PERMANENTLY DISPOSED OF IN A WOODLAND OR AROUND HERITAGE TREES TO BE RETAINED.

MINIMIZE GRADING/SOIL DISTURBANCE IN THE VICINITY, AND AT A MINIMUM, WITHIN THE CRZ (CRITICAL ROOT ZONE) OF RETAINED TREES)

WETLAND IMPACTS

Wetland Area	Wetland Type	Wetland Area (ac.)	Wetland Buffer Area (ac.)	Township Regulated	MDEQ Regulated	Wetland Impact Area (ac.)	Impact to Buffer Area (ac.)	Mitigation Ratio	Mitigation Required (ac.)
A	Forest/Scrub-Shrub	0.57	0.43	Yes	No	0.08	0.14	1.5 ***	0.12
B	Scrub-Shrub	0.05	0.15	Yes	No	0.01	0.09	1.5	0.02
C	Forested	0.27	0.29	Yes	No	0.03	0.16	2	0.06
D	Emergent/Scrub-Shrub	0.05	0.17	Yes	No	0.05	0.17	1.5	0.08
TOTAL		0.94	1.05			0.17	0.56		0.27

*** Impacts to Wetland A are only to Scrub/Shrub portions of wetland, therefore, ratio of 1.5 was used.

LEGEND:

WOODLANDS
TREE TO REMAIN
TREE TO REMOVE
HERITAGE TREE
HERITAGE TREE TO REMOVE
TREE PROTECTION FENCELINE
WETLAND
25' WETLAND BUFFER
WETLAND IMPACT
WETLAND BUFFER IMPACT
PR. WETLAND MITIGATION

40 20 0 40 80 120
SCALE IN FEET 1"=40'

TREE & NATURAL FEATURES PLAN - SOUTH

ARBOR FARMS PHASE 2
CONSTRUCTION PLANS
PART OF THE NORTHWEST 1/4 OF SECTION 26, T.3S., R.6E., PITTSFIELD TOWNSHIP, WASHTENAW COUNTY, MICHIGAN

SHEET 03

ENGINEERS, SURVEYORS
MLP
AND ASSOCIATES, INC.
Michael L. Priest & Associates, Inc.
40655 Kopparnick Road, Canton, MI 48187
phone: (734) 459-8560
fax: (734) 459-2585

APPLICANT
PITTSFIELD LAND LLC
23370 COMMERCE DRIVE
FARMINGTON HILLS, MI 48335
248-921-3996
ATTN: JEFF KATZEN

DATE: 07-10-2019
PM: GMS
PIC: DWS
SURV: AEC
CAD: AGB
\DWG\9525.dwg
XCAL:M.U.S.C. & S.S.
SCALE: 1" = 40'

STATUS:

REVISIONS
08-02-19 PER TWSP. & WCWRC LETTER
10-02-19 PER TWP. ENG REVIEW LETTER
10-08-19 PER TWP. ENG REVIEW LETTER
10-28-19 PER TWP. ENG REVIEW LETTER

JOB NO. 9525.4.18

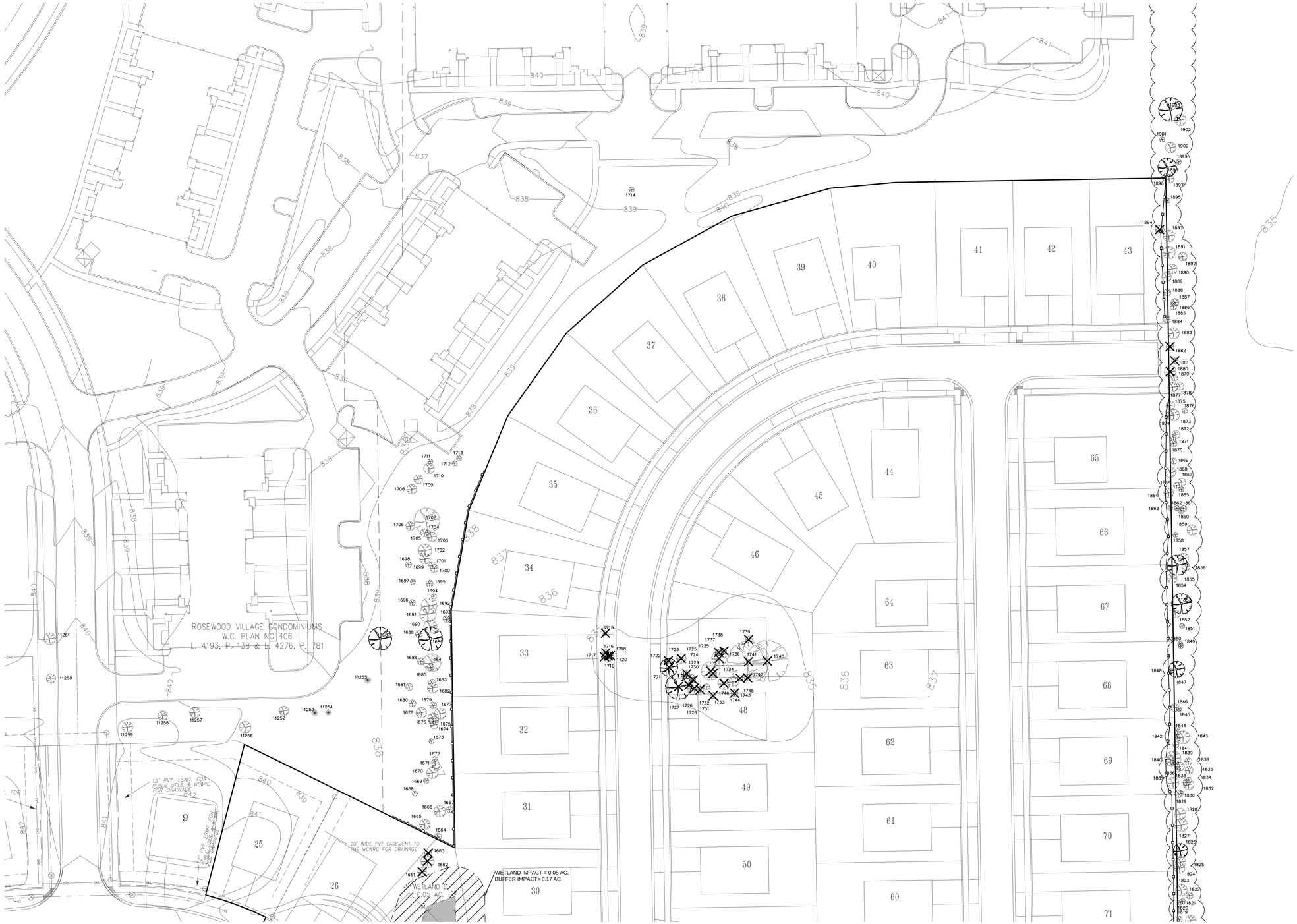

LEGEND:

WOODLANDS
TREE TO REMAIN
TREE TO REMOVE
HERITAGE TREE
HERITAGE TREE TO REMOVE
TREE PROTECTION FENCELINE
WETLAND
25' WETLAND BUFFER
WETLAND IMPACT
WETLAND BUFFER IMPACT
PR. WETLAND MITIGATION

40 20 0 40 80 120
SCALE IN FEET 1"=40'

NATURAL FEATURES

WETLANDS

Wetland Flagging

A site investigation was completed on December 20, 2018 and January 15, 2019 by ASTI Environmental (ATI) to inspect for the presence of and delineate wetlands on the site known as Arbor Farms Phase 2. Wetland boundaries were marked in the field with pink and black striped flagging as shown on this sheet.

Wetland A

Wetland A is a forested wetland with a scrub-shrub component and totals 0.57 acres in size. Vegetation was dominated by silver maple (Acer saccharinum), eastern cottonwood (Populus deltoides), silky dogwood (Cornus amomum), and buttonbush (Cephalanthus occidentalis). Soils are considered hydric due to the presence of a redox dark surface and a depleted matrix. Indicators of wetland hydrology included saturation and water-stained leaves. Vegetation observed within the adjacent upland was dominated by black cherry (Prunus serotina) and common buckthorn (Rhamnus cathartica). Soils in the adjacent upland did not exhibit hydric soil characteristics. No indicators of wetland hydrology were observed. It is ASTI's opinion that Wetland A is not regulated by the DEQ because it is isolated (over 500 feet from and therefore not contiguous with any lake or stream) and less than five acres in size.

Wetland B

Wetland B is an isolated scrub-shrub wetland 0.05 acres in size located entirely on the Property. Vegetation was dominated by common buckthorn (Rhamnus cathartica) and common reed (Phragmites australis). Soils are considered hydric due to the presence of a depleted matrix. Indicators of wetland hydrology included saturation and water-stained leaves. The adjacent upland is a maintained mowed area. No indicators of wetland hydrology were observed.

It is ASTI's opinion that Wetland B is not regulated by the DEQ because it is isolated, less than five acres in size, and not contiguous with a stream or lake.

Wetland C

Wetland C is an isolated forested wetland 0.27 acres in size located entirely on the Property. Vegetation was dominated by eastern cottonwood (Populus deltoides), silky dogwood (Cornus amomum), and common reed (Phragmites australis). Soils are considered hydric due to the presence of a redox dark surface. Indicators of wetland hydrology included saturation and water-stained leaves. The adjacent upland is an active soy bean field. No indicators of wetland hydrology were observed. It is ASTI's opinion that Wetland C is not regulated by the DEQ because it is isolated, less than five acres in size, and not contiguous with a stream or lake.

Wetland D

Wetland D is an isolated reverting emergent wetland 0.05 acres in size located entirely on the Property. Vegetation was dominated by purple loosestrife (Lythrum salicaria), cocklebur (Xanthium strumarium), and soft rush (Juncus effusus). Soils are considered hydric due to the presence of a depleted matrix. Indicators of wetland hydrology included standing water and saturation. The adjacent upland is an active soy bean field and a maintained mowed area. No indicators of wetland hydrology were observed. It is ASTI's opinion that Wetland D is not regulated by the DEQ because it is isolated, less than five acres in size, and not contiguous with a stream or lake.

WOODLANDS

WEST HEDGEROW

The west hedgerow consists of two (2) different species composition. The south portion includes small to medium size trees of Cottonwood, Shagbark Hickory, White Oak, Red Oak, Black Cherry, and Elm with understory trees including Crabapple and Apple and shrubs including Buckthorn, Gray Dogwood, and Wild Rose. The north portion includes small to medium size trees of Pin Oak, Box Elder, Chinese Elm, and Cottonwood with understory trees including Hawthorn and shrubs including Buckthorn and Gray Dogwood.

EAST HEDGEROW

The east hedgerow runs the entire length of the east property line. The hedgerow is dominated by large trees predominantly of Shagbark Hickory with some White Oak, Red Oak, and Black Cherry. Several dead trunks of Elm occur in the northerly portion of the hedgerow. The understory layer includes predominantly of small Red Oak with other small trees of Shagbark Hickory, White Oak, Black Cherry, and Elm with some Hawthorn. The shrub layer is dominated by Buckthorn with some Gray Dogwood, Wild Rose, and Grapevine.

SOUTH WOODLAND

The south woodland consists predominately of Cottonwoods ranging in size from saplings to fifteen inches diameter at breast height. Standing water to eight inches (8") occurred in the Cottonwood stand. The edges include Red Maple, Elm, Buckthorn, and Gray Dogwood. The northeast perimeter is characterized by large mounds of soil with small trees including Box Elder, Maple, and Ash and shrubs including Buckthorn and Gray Dogwood. Meadow species observed includes Goldenrod and Aster.

NORTH WOODLAND

The north woodland is dominated by two (2) large Bur Oak trees in the western portion. Other large trees include Oaks and Hickories. Two (2) large dead Elms occur in the central portion of this ecosystem. The understory layer includes Hawthorn and large Buckthorn. The shrub layer includes Buckthorn, Gray Dogwood, Poison Ivy, and Grapevine. The easterly portion consists of a dense thicket of Crabapples covered with Grapevine and a medium size Red Maple.

LARGE WEST WOODLAND

The large east woodland is comprised of an upland ecosystem and a wetland ecosystem. The wooded upland forms the westerly portion and is characterized by the dominance of Hickory in the overstory with both Shagbark Hickory and Bitternut Hickory ranging in size from six inches to thirty-six inches (6" – 36"). Several large Red Oak trees also contribute to the overstory. Other smaller trees include Box Elder, White Oak, Bur Oak, Red Oak, American Elm, Black Cherry, and Red Maple. The understory consists of Hickory, Red Oak, and American Elm with many Hickory saplings. The shrub layer is sporadic with a dominance of Buckthorn. The ground layer includes Woodbine and Poison Ivy with some woodland wildflowers of Mayapple, Solomon's Seal, Creeping Strawberrybush, and Jack-in-the-Pulpit. The ground layer covers approximately fifty percent (50%) of the woodland floor. The wooded wetland consists of a large area of standing water in the central portion of the ecosystem with large trees of predominantly Cottonwood scattered throughout the standing water. Several Elm trees are dead. Some Red Maple occur in the wetland at the perimeter. Wetland shrubs include Red Twig Dogwood and Buttonbush. A large White Oak with many Shagbark Hickory and some Red Maple, Black Cherry, and Cottonwood occur at the perimeter in the wetland buffer area. The shrub layer in this area includes Buckthorn, Honeysuckle, Poison Ivy, and Grapevine.

TREE PROTECTION FENCE DETAIL

NOT TO SCALE

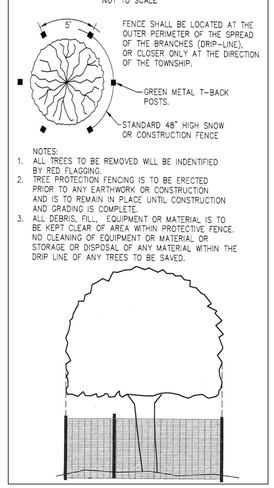

NOTES:

1. ALL TREES TO BE REMOVED WILL BE INDENTIFIED BY RED FLAGGING.
2. TREE PROTECTION FENCING IS TO BE ERECTED PRIOR TO ANY EARTHWORK OR CONSTRUCTION AND IS TO REMAIN IN PLACE UNTIL CONSTRUCTION AND GRADING IS COMPLETE.
3. ALL DEBRIS, FILL, EQUIPMENT OR MATERIAL IS TO BE KEPT CLEAR OF AREA WITHIN PROTECTIVE FENCE. NO CLEANING OF EQUIPMENT OR MATERIAL OR STORAGE OR DISPOSAL OF ANY MATERIAL WITHIN THE DRIP LINE OF ANY TREES TO BE SAVED.

APPLICANT

PITTSFIELD LAND LLC
23370 COMMERCE DRIVE
FARMINGTON HILLS, MI 48335
248-921-3996
ATTN: JEFF KATZEN

DATE: 07-10-2019
PM: GMS
PIC: GMS
SURV: AEC
CAD: AGB
\DWG\9525.dwg
XCAT:MUS.C. & S.S.
SCALE: 1" = 40'

STATUS:

REVISIONS
10-02-19 PER TWSP. & WCWRC LETTER
10-02-19 PER TWP. ENG REVIEW LETTER
10-28-19 PER TWP. ENG REVIEW LETTER

JOB NO. 9525.4.18

ENGINEERS - SURVEYORS
MLP
AND ASSOCIATES, INC.
Michael L. Priest & Associates, Inc.
40655 Koppernick Road, Canton, MI 48187
phone: (734) 459-8560
fax: (734) 459-2585

TREE & NATURAL FEATURES PLAN - NORTH

ARBOR FARMS PHASE 2

CONSTRUCTION PLANS

PART OF THE NORTHWEST 1/4 OF SECTION 26, T.3S., R.6E., PITTSFIELD TOWNSHIP, WASHTENAW COUNTY, MICHIGAN

SHEET 04

TREE SCHEDULE

ID	REMOVE?	DBH	Common Name	Botanical Name	Condition	Heritage?	Woodland?	If Removed, Within Building, Structure, Street or Driveway?	Mitigate?	Mitigation Inches
1501		6	RED MAPLE	ACER RUBRUM	Fair		Y			
1502		7	BLACK CHERRY	PRUNUS SEROTINA	Fair		Y			
~~1503~~		~~6~~	~~AMERICAN ELM~~	~~ULMUS AMERICANA~~	~~Undesireable~~		~~Y~~			
~~1504~~		~~7~~	~~AMERICAN ELM~~	~~ULMUS AMERICANA~~	~~Undesireable~~		~~Y~~			
~~1505~~		~~6~~	~~AMERICAN ELM~~	~~ULMUS AMERICANA~~	~~Undesireable~~		~~Y~~			
~~1506~~		~~6~~	~~AMERICAN ELM~~	~~ULMUS AMERICANA~~	~~Undesireable~~		~~Y~~			
1507		8	SHAGBARK HICKORY	CARYA OVATA	Fair		Y			
1508		7	SHAGBARK HICKORY	CARYA OVATA	Fair		Y			
1509		7	SHAGBARK HICKORY	CARYA OVATA	Fair		Y			
1510		6	RED MAPLE	ACER RUBRUM	Fair		Y			
1511		7	SHAGBARK HICKORY	CARYA OVATA	Fair		Y			
1512		7	RED MAPLE	ACER RUBRUM	Fair		Y			
1513		6	SHAGBARK HICKORY	CARYA OVATA	Fair		Y			
1514		6	RED MAPLE	ACER RUBRUM	Fair		Y			
1515		13	RED MAPLE	ACER RUBRUM	Fair		Y			
~~1516~~		~~15~~	~~COTTONWOOD~~	~~POPULUS DELTOIDES~~	~~Undesireable~~		~~Y~~			
~~1517~~		~~13~~	~~COTTONWOOD~~	~~POPULUS DELTOIDES~~	~~Undesireable~~		~~Y~~			
1518		6	SHAGBARK HICKORY	CARYA OVATA	Fair		Y			
1519		6	SHAGBARK HICKORY	CARYA OVATA	Fair		Y			
~~1520~~		~~6~~	~~AMERICAN ELM~~	~~ULMUS AMERICANA~~	~~Undesireable~~		~~Y~~			
1521		23	RED MAPLE	ACER RUBRUM	Fair	HT	Y			
1522		7	RED MAPLE	ACER RUBRUM	Fair		Y			
1523		7	RED OAK	QUERCUS RUBRA	Fair		Y			
1524		8	RED OAK	QUERCUS RUBRA	Fair		Y			
1525		6	RED OAK	QUERCUS RUBRA	Fair		Y			
1526		6	BLACK CHERRY	PRUNUS SEROTINA	Fair		Y			
1527		6	RED OAK	QUERCUS RUBRA	Fair		Y			
1528		19	SHAGBARK HICKORY	CARYA OVATA	Fair	HT	Y			
1529		26	WHITE OAK	QUERCUS ALBA	Fair	HT	Y			
~~1530~~		~~6~~	~~AMERICAN ELM~~	~~ULMUS AMERICANA~~	~~Undesireable~~		~~Y~~			
1531		8	APPLE	MALUS PUMILA	Fair		Y			
1532		6	RED OAK	QUERCUS RUBRA	Fair		Y			
1533		8	SHELLBARK HICKORY	CARYA LACINIOSA	Fair		Y			
1534		8	SHELLBARK HICKORY	CARYA LACINIOSA	Fair		Y			
~~1535~~		~~10~~	~~AMERICAN ELM~~	~~ULMUS AMERICANA~~	~~Undesireable~~		~~Y~~			
~~1536~~		~~10~~	~~AMERICAN ELM~~	~~ULMUS AMERICANA~~	~~Undesireable~~		~~Y~~			
1537	REMOVE	6	PLUM	PRUNUS	Fair		N	N	N	
1538		7	RED MAPLE	ACER RUBRUM	Fair		Y			
1539		7	RED MAPLE	ACER RUBRUM	Fair		Y			
1540		6	RED MAPLE	ACER RUBRUM	Fair		Y			
1541		6	RED MAPLE	ACER RUBRUM	Fair		Y			
1542		8	RED MAPLE	ACER RUBRUM	Fair		Y			
1543		17	RED MAPLE	ACER RUBRUM	Fair	HT	Y			
1544		8	APPLE	MALUS PUMILA	Fair		Y			
1545		6	RED MAPLE	ACER RUBRUM	Fair		Y			
1546		7	RED MAPLE	ACER RUBRUM	Fair		Y			
~~1547~~		~~7~~	~~BLACK CHERRY~~	~~PRUNUS SEROTINA~~	~~Poor~~		~~Y~~			
1548		7	RED MAPLE	ACER RUBRUM	Fair		Y			
~~1549~~		~~7~~	~~BLACK CHERRY~~	~~PRUNUS SEROTINA~~	~~Poor~~		~~Y~~			
1550		6	RED MAPLE	ACER RUBRUM	Fair		Y			
1551		7	RED MAPLE	ACER RUBRUM	Fair		Y			
1552		7	RED MAPLE	ACER RUBRUM	Fair		Y			
1553		6	BLACK CHERRY	PRUNUS SEROTINA	Fair		Y			
~~1554~~		~~6~~	~~RED MAPLE~~	~~ACER RUBRUM~~	~~Poor~~		~~Y~~			
1555		7	MULBERRY	MORUS ALBA	Fair		Y			
1556		7	RED OAK	QUERCUS RUBRA	Fair		Y			
1557		13	SHELLBARK HICKORY	CARYA LACINIOSA	Fair		Y			
1558		6	SHELLBARK HICKORY	CARYA LACINIOSA	Fair		Y			
1559		10	SHAGBARK HICKORY	CARYA OVATA	Fair		Y			
1560		16	PIGNUT HICKORY	CARYA GLABRA	Fair	HT	Y			
~~1561~~		~~10~~	~~AMERICAN ELM~~	~~ULMUS AMERICANA~~	~~Undesireable~~		~~Y~~			
~~1562~~		~~8~~	~~WHITE OAK~~	~~QUERCUS ALBA~~	~~Poor~~		~~Y~~			
1563		12	SHELLBARK HICKORY	CARYA LACINIOSA	Fair		Y			
1564		17	PIGNUT HICKORY	CARYA GLABRA	Fair	HT	Y			
~~1565~~		~~10~~	~~AMERICAN ELM~~	~~ULMUS AMERICANA~~	~~Undesireable~~		~~Y~~			
1566		17	SHAGBARK HICKORY	CARYA OVATA	Fair	HT	Y			
1567		13	BASSWOOD	TILIA AMERICANA	Fair		Y			
1568		6	RED MAPLE	ACER RUBRUM	Fair		Y			
~~1569~~		~~8~~	~~AMERICAN ELM~~	~~ULMUS AMERICANA~~	~~Undesireable~~		~~Y~~			
1570		22	WHITE OAK	QUERCUS ALBA	Fair	HT	Y			
1571	REMOVE	10	RED MAPLE	ACER RUBRUM	Fair		Y	N	Y	10
1572		8	SHAGBARK HICKORY	CARYA OVATA	Fair		Y			
1573	REMOVE	15	SHAGBARK HICKORY	CARYA OVATA	Fair		Y	N	Y	15
1574		12	SHELLBARK HICKORY	CARYA LACINIOSA	Fair		Y			
1575	REMOVE	7	PIGNUT HICKORY	CARYA GLABRA	Fair		Y	N	Y	7
1576		33	WHITE OAK	QUERCUS ALBA	Fair	HT	Y			
~~1577~~		~~6~~	~~AMERICAN ELM~~	~~ULMUS AMERICANA~~	~~Undesireable~~		~~Y~~			
~~1578~~		~~17~~	~~AMERICAN ELM~~	~~ULMUS AMERICANA~~	~~Undesireable~~		~~Y~~			
1579		13	RED OAK	QUERCUS RUBRA	Fair		Y			
1580		9	RED MAPLE	ACER RUBRUM	Fair		Y			
1581		6	RED MAPLE	ACER RUBRUM	Fair		Y			
1582		6	SHAGBARK HICKORY	CARYA OVATA	Fair		Y			
1583		19	PIGNUT HICKORY	CARYA GLABRA	Fair	HT	Y			
1584		7	SHAGBARK HICKORY	CARYA OVATA	Fair		Y			
1585		7	BLACK CHERRY	PRUNUS SEROTINA	Fair		Y			
1586		6	WHITE OAK	QUERCUS ALBA	Fair		Y			
1587		7	RED OAK	QUERCUS RUBRA	Fair		Y			
1588		7	SHELLBARK HICKORY	CARYA LACINIOSA	Fair		Y			
1589		17	SHELLBARK HICKORY	CARYA LACINIOSA	Fair	HT	Y			
~~1590~~		~~9~~	~~AMERICAN ELM~~	~~ULMUS AMERICANA~~	~~Dead~~		~~Y~~			
1591		7	RED MAPLE	ACER RUBRUM	Fair		Y			
1592		6	RED MAPLE	ACER RUBRUM	Fair		Y			
1593		6	BLACK CHERRY	PRUNUS SEROTINA	Fair		Y			
1594		6	RED MAPLE	ACER RUBRUM	Fair		Y			
1595		9	RED MAPLE	ACER RUBRUM	Fair		Y			
~~1596~~		~~14~~	~~COTTONWOOD~~	~~POPULUS DELTOIDES~~	~~Undesireable~~		~~Y~~			
1597		17	RED MAPLE	ACER RUBRUM	Fair	HT	Y			
1598		10	SHAGBARK HICKORY	CARYA OVATA	Fair		Y			
~~1599~~		~~6~~	~~BLACK CHERRY~~	~~PRUNUS SEROTINA~~	~~Poor~~		~~Y~~			
1600		8	RED MAPLE	ACER RUBRUM	Fair		Y			
~~1601~~		~~17~~	~~COTTONWOOD~~	~~POPULUS DELTOIDES~~	~~Undesireable~~		~~Y~~			
~~1602~~		~~8~~	~~COTTONWOOD~~	~~POPULUS DELTOIDES~~	~~Undesireable~~		~~Y~~			
~~1603~~		~~17~~	~~COTTONWOOD~~	~~POPULUS DELTOIDES~~	~~Poor~~		~~Y~~			
~~1604~~		~~15~~	~~COTTONWOOD~~	~~POPULUS DELTOIDES~~	~~Undesireable~~		~~Y~~			
~~1605~~		~~6~~	~~AMERICAN ELM~~	~~ULMUS AMERICANA~~	~~Undesireable~~		~~Y~~			
~~1606~~		~~21~~	~~COTTONWOOD~~	~~POPULUS DELTOIDES~~	~~Undesireable~~		~~Y~~			
1607		6	RED MAPLE	ACER RUBRUM	Fair		Y			
~~1608~~		~~16~~	~~COTTONWOOD~~	~~POPULUS DELTOIDES~~	~~Undesireable~~		~~Y~~			
~~1609~~		~~18~~	~~WHITE WILLOW~~	~~SALIX ALBA~~	~~Poor~~		~~Y~~			
~~1610~~		~~17~~	~~COTTONWOOD~~	~~POPULUS DELTOIDES~~	~~Undesireable~~		~~Y~~			
~~1611~~		~~10~~	~~COTTONWOOD~~	~~POPULUS DELTOIDES~~	~~Undesireable~~		~~Y~~			
~~1612~~		~~7~~	~~AMERICAN ELM~~	~~ULMUS AMERICANA~~	~~Dead~~		~~Y~~			
~~1613~~		~~7~~	~~AMERICAN ELM~~	~~ULMUS AMERICANA~~	~~Undesireable~~		~~Y~~			
1614		7	SHAGBARK HICKORY	CARYA OVATA	Fair		Y			
1615		8	SHAGBARK HICKORY	CARYA OVATA	Fair		Y			
1616		7	SHAGBARK HICKORY	CARYA OVATA	Fair		Y			
1617		7	SHAGBARK HICKORY	CARYA OVATA	Fair		Y			
1618		6	SHAGBARK HICKORY	CARYA OVATA	Fair		Y			
1619		7	SHAGBARK HICKORY	CARYA OVATA	Fair		Y			
1620		7	SHAGBARK HICKORY	CARYA OVATA	Fair		Y			
1621		8	SHELLBARK HICKORY	CARYA LACINIOSA	Fair		Y			
1622	REMOVE	8	SHELLBARK HICKORY	CARYA LACINIOSA	Fair		Y	Y	N	
1623	REMOVE	8	SHELLBARK HICKORY	CARYA LACINIOSA	Fair		Y	Y	N	
~~1624~~		~~20~~	~~COTTONWOOD~~	~~POPULUS DELTOIDES~~	~~Dead~~		~~Y~~			
~~1625~~		~~13~~	~~COTTONWOOD~~	~~POPULUS DELTOIDES~~	~~Undesireable~~		~~Y~~			
~~1626~~		~~14~~	~~WHITE WILLOW~~	~~SALIX ALBA~~	~~Undesireable~~		~~Y~~			
~~1627~~		~~16~~	~~COTTONWOOD~~	~~POPULUS DELTOIDES~~	~~Undesireable~~		~~Y~~			
~~1628~~		~~8~~	~~COTTONWOOD~~	~~POPULUS DELTOIDES~~	~~Undesireable~~		~~Y~~			
~~1629~~		~~10~~	~~COTTONWOOD~~	~~POPULUS DELTOIDES~~	~~Undesireable~~		~~Y~~			
~~1630~~		~~10~~	~~COTTONWOOD~~	~~POPULUS DELTOIDES~~	~~Undesireable~~		~~Y~~			
1631		10	RED OAK	QUERCUS RUBRA	Fair		Y			
1632		8	RED MAPLE	ACER RUBRUM	Fair		Y			
1633		8	RED MAPLE	ACER RUBRUM	Fair		Y			
1634		6	RED MAPLE	ACER RUBRUM	Fair		Y			
1635		6	RED MAPLE	ACER RUBRUM	Fair		Y			
~~1636~~		~~7~~	~~AMERICAN ELM~~	~~ULMUS AMERICANA~~	~~Undesireable~~		~~Y~~			
1637		11	RED MAPLE	ACER RUBRUM	Fair		Y			
1638		8	RED MAPLE	ACER RUBRUM	Fair		Y			
1639		11	RED MAPLE	ACER RUBRUM	Fair		Y			
1640		11	RED MAPLE	ACER RUBRUM	Fair		Y			
1641		8	MULBERRY	MORUS ALBA	Fair		Y			
1642		6	SHAGBARK HICKORY	CARYA OVATA	Fair		Y			
1643		28	RED MAPLE	ACER RUBRUM	Fair	HT	Y			
~~1644~~		~~22~~	~~COTTONWOOD~~	~~POPULUS DELTOIDES~~	~~Undesireable~~		~~Y~~			
~~1645~~		~~12~~	~~COTTONWOOD~~	~~POPULUS DELTOIDES~~	~~Undesireable~~		~~Y~~			
~~1646~~		~~20~~	~~COTTONWOOD~~	~~POPULUS DELTOIDES~~	~~Undesireable~~		~~Y~~			
~~1647~~		~~7~~	~~WHITE WILLOW~~	~~SALIX ALBA~~	~~Undesireable~~		~~N~~			
~~1648~~	~~REMOVE~~	~~9~~	~~BLACK CHERRY~~	~~PRUNUS SEROTINA~~	~~Poor~~		~~N~~	~~Y~~	~~N~~	
1649	REMOVE	6	SHAGBARK HICKORY	CARYA OVATA	Fair		N	Y	N	
1650	REMOVE	7	BEAR OAK	QUERCUS ILICIFOLIA	Fair		N	Y	N	
1651	REMOVE	7	BEAR OAK	QUERCUS ILICIFOLIA	Fair		N	Y	N	
1652	REMOVE	7	BEAR OAK	QUERCUS ILICIFOLIA	Fair		N	Y	N	
~~1653~~	~~REMOVE~~	~~8~~	~~BLACK CHERRY~~	~~PRUNUS SEROTINA~~	~~Poor~~		~~N~~	~~Y~~	~~N~~	
~~1654~~	~~REMOVE~~	~~16~~	~~SHAGBARK HICKORY~~	~~CARYA OVATA~~	~~Poor~~		~~N~~	~~N~~	~~N~~	
1655	REMOVE	13	APPLE	MALUS PUMILA	Fair		N	N	N	
1656	REMOVE	7	APPLE	MALUS PUMILA	Fair		N	N	N	
~~1657~~	~~REMOVE~~	~~8~~	~~BLACK CHERRY~~	~~PRUNUS SEROTINA~~	~~Poor~~		~~N~~	~~N~~	~~N~~	
1658	REMOVE	6	SHAGBARK HICKORY	CARYA OVATA	Fair		N	N	N	
1659	REMOVE	7	APPLE	MALUS PUMILA	Fair		N	N	N	
~~1660~~		~~6~~	~~EASTERN COTTONWOOD~~	~~POPULUS DELTOIDES~~	~~Undesireable~~		~~N~~			
~~1661~~	~~REMOVE~~	~~10~~	~~BOX ELDER~~	~~ACER NEGUNDO~~	~~Undesireable~~		~~N~~	~~N~~	~~N~~	
~~1662~~	~~REMOVE~~	~~15~~	~~BOX ELDER~~	~~ACER NEGUNDO~~	~~Undesireable~~		~~N~~	~~N~~	~~N~~	
~~1663~~	~~REMOVE~~	~~8~~	~~BOX ELDER~~	~~ACER NEGUNDO~~	~~Undesireable~~		~~N~~	~~N~~	~~N~~	
~~1664~~		~~8~~	~~BOX ELDER~~	~~ACER NEGUNDO~~	~~Undesireable~~		~~N~~			
~~1665~~		~~12~~	~~SIBERIAN ELM~~	~~ULMUS PUMILA~~	~~Undesireable~~		~~N~~			
~~1666~~		~~13~~	~~BOX ELDER~~	~~ACER NEGUNDO~~	~~Undesireable~~		~~N~~			
~~1667~~		~~7~~	~~SIBERIAN ELM~~	~~ULMUS PUMILA~~	~~Undesireable~~		~~N~~			
1668		6	SHAGBARK HICKORY	CARYA OVATA	Fair		N			
~~1669~~		~~6~~	~~ASH~~	~~FRAXINUS~~	~~Dead~~		~~N~~			
~~1670~~		~~13~~	~~AMERICAN ELM~~	~~ULMUS AMERICANA~~	~~Dead~~		~~N~~			
~~1671~~		~~9~~	~~BOX ELDER~~	~~ACER NEGUNDO~~	~~Undesireable~~		~~N~~			
1672		6	SHAGBARK HICKORY	CARYA OVATA	Fair		N			
1673		6	SHAGBARK HICKORY	CARYA OVATA	Fair		N			
1674		9	SHAGBARK HICKORY	CARYA OVATA	Fair		N			

ID	REMOVE?	DBH	Common Name	Botanical Name	Condition	Heritage?	Woodland?	If Removed, Within Building, Structure, Street or Driveway?	Mitigate?	Mitigation Inches
1675		11	SHAGBARK HICKORY	CARYA OVATA	Fair		N			
~~1676~~		~~12~~	~~BLACK CHERRY~~	~~PRUNUS SEROTINA~~	~~Poor~~		~~N~~			
~~1677~~		~~13~~	~~BOX ELDER~~	~~ACER NEGUNDO~~	~~Undesireable~~		~~N~~			
~~1678~~		~~12~~	~~BOX ELDER~~	~~ACER NEGUNDO~~	~~Undesireable~~		~~N~~			
1679		8	SHELLBARK HICKORY	CARYA LACINIOSA	Fair		N			
1680		8	RED OAK	QUERCUS RUBRA	Fair		N			
1681		8	RED OAK	QUERCUS RUBRA	Fair		N			
1682		12	BLACK CHERRY	PRUNUS SEROTINA	Fair		N			
1683		8	SHAGBARK HICKORY	CARYA OVATA	Fair		N			
~~1684~~		~~20~~	~~AMERICAN ELM~~	~~ULMUS AMERICANA~~	~~Dead~~		~~N~~			
1685		8	SHAGBARK HICKORY	CARYA OVATA	Fair		N			
~~1686~~		~~8~~	~~BOX ELDER~~	~~ACER NEGUNDO~~	~~Undesireable~~		~~N~~			
1687		26	SHAGBARK HICKORY	CARYA OVATA	Fair	HT	N			
~~1688~~		~~8~~	~~BOX ELDER~~	~~ACER NEGUNDO~~	~~Undesireable~~		~~N~~			
1689		27	BLACK CHERRY	PRUNUS SEROTINA	Fair	HT	N			
~~1690~~		~~15~~	~~BLACK CHERRY~~	~~PRUNUS SEROTINA~~	~~Poor~~		~~N~~			
~~1691~~		~~19~~	~~BLACK CHERRY~~	~~PRUNUS SEROTINA~~	~~Poor~~		~~N~~			
~~1692~~		~~18~~	~~BLACK CHERRY~~	~~PRUNUS SEROTINA~~	~~Poor~~		~~N~~			
1693		8	HAWTHORN	CRATAEGUS	Fair		N			
1694		6	SHAGBARK HICKORY	CARYA OVATA	Fair		N			
1695		8	SHAGBARK HICKORY	CARYA OVATA	Fair		N			
~~1696~~		~~7~~	~~AMERICAN ELM~~	~~ULMUS AMERICANA~~	~~Undesireable~~		~~N~~			
~~1697~~		~~6~~	~~AMERICAN ELM~~	~~ULMUS AMERICANA~~	~~Undesireable~~		~~N~~			
~~1698~~		~~7~~	~~AMERICAN ELM~~	~~ULMUS AMERICANA~~	~~Undesireable~~		~~N~~			
~~1699~~		~~12~~	~~BLACK CHERRY~~	~~PRUNUS SEROTINA~~	~~Poor~~		~~N~~			
~~1700~~		~~9~~	~~BLACK CHERRY~~	~~PRUNUS SEROTINA~~	~~Poor~~		~~N~~			
1701		8	SHAGBARK HICKORY	CARYA OVATA	Fair		N			
1702		15	BLACK OAK	QUERCUS VELUTINA	Fair		N			
1703		11	SHAGBARK HICKORY	CARYA OVATA	Fair		N			
1704		6	SHAGBARK HICKORY	CARYA OVATA	Fair		N			
1705		9	RED OAK	QUERCUS RUBRA	Fair		N			
~~1706~~		~~10~~	~~AMERICAN ELM~~	~~ULMUS AMERICANA~~	~~Undesireable~~		~~N~~			
~~1707~~		~~29~~	~~BLACK CHERRY~~	~~PRUNUS SEROTINA~~	~~Poor~~		~~N~~			
1708		11	BLACK CHERRY	PRUNUS SEROTINA	Fair		N			
~~1709~~		~~10~~	~~BOX ELDER~~	~~ACER NEGUNDO~~	~~Undesireable~~		~~N~~			
1710		12	SHAGBARK HICKORY	CARYA OVATA	Fair		N			
1711		6	SHAGBARK HICKORY	CARYA OVATA	Fair		N			
~~1712~~		~~6~~	~~BOX ELDER~~	~~ACER NEGUNDO~~	~~Undesireable~~		~~N~~			
~~1713~~		~~6~~	~~BOX ELDER~~	~~ACER NEGUNDO~~	~~Undesireable~~		~~N~~			
1714		6	SYCAMORE	PLANTANUS OCCIDENTALIS	Fair		N			
~~1715~~	~~REMOVE~~	~~6~~	~~SOUR CHERRY~~	~~PRUNUS CERASUS~~	~~Poor~~		~~N~~	~~N~~	~~N~~	
~~1716~~	~~REMOVE~~	~~7~~	~~BLACK CHERRY~~	~~PRUNUS SEROTINA~~	~~Dead~~		~~N~~	~~Y~~	~~N~~	
1717	REMOVE	7	BLACK CHERRY	PRUNUS SEROTINA	Fair		N	Y	N	
1718	REMOVE	10	BLACK CHERRY	PRUNUS SEROTINA	Fair		N	Y	N	
1719	REMOVE	8	SHAGBARK HICKORY	CARYA OVATA	Fair		N	N	N	
1720	REMOVE	8	SHAGBARK HICKORY	CARYA OVATA	Fair		N	Y	N	
1721	REMOVE	20	WHITE OAK	QUERCUS ALBA	Fair	HT	N	N	Y	30
1722	REMOVE	6	SOUR CHERRY	PRUNUS CERASUS	Fair		N	N	N	
1723	REMOVE	11	WHITE OAK	QUERCUS ALBA	Fair		N	N	N	
1724	REMOVE	7	WHITE OAK	QUERCUS ALBA	Fair		N	N	N	
1725	REMOVE	8	WHITE OAK	QUERCUS ALBA	Fair		N	N	N	
1726	REMOVE	7	WHITE OAK	QUERCUS ALBA	Fair		N	N	N	
1727	REMOVE	28	WHITE OAK	QUERCUS ALBA	Fair	HT	N	N	Y	42
1728	REMOVE	15	WHITE OAK	QUERCUS ALBA	Fair		N	N	N	
1729	REMOVE	7	WHITE OAK	QUERCUS ALBA	Fair		N	N	N	
1730	REMOVE	6	SHAGBARK HICKORY	CARYA OVATA	Fair		N	N	N	
1731	REMOVE	8	WHITE OAK	QUERCUS ALBA	Fair		N	Y	N	
1732	REMOVE	7	WHITE OAK	QUERCUS ALBA	Fair		N	Y	N	
1733	REMOVE	7	SHAGBARK HICKORY	CARYA OVATA	Fair		N	Y	N	
1734	REMOVE	9	SHAGBARK HICKORY	CARYA OVATA	Fair		N	N	N	
~~1735~~	~~REMOVE~~	~~21~~	~~AMERICAN ELM~~	~~ULMUS AMERICANA~~	~~Dead~~		~~N~~	~~Y~~	~~N~~	
~~1736~~	~~REMOVE~~	~~17~~	~~AMERICAN ELM~~	~~ULMUS AMERICANA~~	~~Dead~~		~~N~~	~~Y~~	~~N~~	
1737	REMOVE	8	WHITE OAK	QUERCUS ALBA	Fair		N	Y	N	
1738	REMOVE	6	SHAGBARK HICKORY	CARYA OVATA	Fair		N	Y	N	
~~1739~~	~~REMOVE~~	~~8~~	~~AMERICAN ELM~~	~~ULMUS AMERICANA~~	~~Dead~~		~~N~~	~~Y~~	~~N~~	
~~1740~~	~~REMOVE~~	~~47~~	~~WHITE OAK~~	~~QUERCUS ALBA~~	~~Poor~~		~~N~~	~~Y~~	~~N~~	
~~1741~~	~~REMOVE~~	~~47~~	~~WHITE OAK~~	~~QUERCUS ALBA~~	~~Poor~~		~~N~~	~~Y~~	~~N~~	
~~1742~~	~~REMOVE~~	~~8~~	~~AMERICAN ELM~~	~~ULMUS AMERICANA~~	~~Poor~~		~~N~~	~~N~~	~~N~~	
1743	REMOVE	13	WHITE OAK	QUERCUS ALBA	Fair		N	N	N	
~~1744~~	~~REMOVE~~	~~8~~	~~AMERICAN ELM~~	~~ULMUS AMERICANA~~	~~Dead~~		~~N~~	~~Y~~	~~N~~	
1745	REMOVE	6	WHITE OAK	QUERCUS ALBA	Fair		N	N	N	
1746	REMOVE	14	WHITE OAK	QUERCUS ALBA	Fair		N	Y	N	
1747		12	SHELLBARK HICKORY	CARYA LACINIOSA	Fair		Y			
1748		13	SHELLBARK HICKORY	CARYA LACINIOSA	Fair		Y			
1749		27	WHITE OAK	QUERCUS ALBA	Fair	HT	Y			
1750		11	SHAGBARK HICKORY	CARYA OVATA	Fair		Y			
1751		6	RED OAK	QUERCUS RUBRA	Fair		Y			
1752		10	SHAGBARK HICKORY	CARYA OVATA	Fair		Y			
1753		19	SHELLBARK HICKORY	CARYA LACINIOSA	Fair	HT	Y			
1754		7	RED OAK	QUERCUS RUBRA	Fair		N			
1755		22	SHELLBARK HICKORY	CARYA LACINIOSA	Fair	HT	Y			
1756		12	BLACK CHERRY	PRUNUS SEROTINA	Fair		Y			
1757		8	SHAGBARK HICKORY	CARYA OVATA	Fair		Y			
1758		6	SHAGBARK HICKORY	CARYA OVATA	Fair		Y			
1759		6	SHAGBARK HICKORY	CARYA OVATA	Fair		Y			
1760		6	SHAGBARK HICKORY	CARYA OVATA	Fair		Y			
1761		8	BLACK CHERRY	PRUNUS SEROTINA	Fair		Y			
1762		15	SHAGBARK HICKORY	CARYA OVATA	Fair		Y			
1763		13	SHAGBARK HICKORY	CARYA OVATA	Fair		Y			
1764		9	RED OAK	QUERCUS RUBRA	Fair		Y			
1765		7	SHAGBARK HICKORY	CARYA OVATA	Fair		Y			
1766		7	BLACK CHERRY	PRUNUS SEROTINA	Fair		Y			
1767		15	SHELLBARK HICKORY	CARYA LACINIOSA	Fair		Y			
1768		17	RED OAK	QUERCUS RUBRA	Fair	HT	Y			
~~1769~~		~~18~~	~~AMERICAN ELM~~	~~ULMUS AMERICANA~~	~~Undesireable~~		~~Y~~			
1770		9	RED OAK	QUERCUS RUBRA	Fair		Y			
~~1771~~		~~10~~	~~AMERICAN ELM~~	~~ULMUS AMERICANA~~	~~Dead~~		~~Y~~			
1772		7	RED OAK	QUERCUS RUBRA	Fair		Y			
1773		6	SHAGBARK HICKORY	CARYA OVATA	Fair		Y			
1774		8	SHELLBARK HICKORY	CARYA LACINIOSA	Fair		Y			
1775		7	SHELLBARK HICKORY	CARYA LACINIOSA	Fair		Y			
1776		8	SHELLBARK HICKORY	CARYA LACINIOSA	Fair		Y			
~~1777~~		~~10~~	~~BLACK CHERRY~~	~~PRUNUS SEROTINA~~	~~Poor~~		~~Y~~			
1778		15	SHAGBARK HICKORY	CARYA OVATA	Fair		Y			
~~1779~~		~~6~~	~~AMERICAN ELM~~	~~ULMUS AMERICANA~~	~~Undesireable~~		~~Y~~			
1780		6	SHAGBARK HICKORY	CARYA OVATA	Fair		Y			
1781		10	BLACK CHERRY	PRUNUS SEROTINA	Fair		Y			
1782		11	BLACK CHERRY	PRUNUS SEROTINA	Fair		Y			
1783		7	SHAGBARK HICKORY	CARYA OVATA	Fair		Y			
1784		7	BLACK CHERRY	PRUNUS SEROTINA	Fair		Y			
1785		17	SHAGBARK HICKORY	CARYA OVATA	Fair	HT	Y			
1786		11	BLACK CHERRY	PRUNUS SEROTINA	Fair		Y			
1787		10	BLACK CHERRY	PRUNUS SEROTINA	Fair		Y			
~~1788~~		~~6~~	~~AMERICAN ELM~~	~~ULMUS AMERICANA~~	~~Dead~~		~~Y~~			
1789		6	SHAGBARK HICKORY	CARYA OVATA	Fair		Y			
1790		10	SHELLBARK HICKORY	CARYA LACINIOSA	Fair		Y			
1791		6	SHAGBARK HICKORY	CARYA OVATA	Fair		Y			
1792		8	SHAGBARK HICKORY	CARYA OVATA	Fair		Y			
1793		8	SHAGBARK HICKORY	CARYA OVATA	Fair		Y			
1794		8	SHAGBARK HICKORY	CARYA OVATA	Fair		Y			
1795		7	SHELLBARK HICKORY	CARYA LACINIOSA	Fair		Y			
1796		6	SHELLBARK HICKORY	CARYA LACINIOSA	Fair		Y			
1797		8	SHELLBARK HICKORY	CARYA LACINIOSA	Fair		Y			
1798		6	SHAGBARK HICKORY	CARYA OVATA	Fair		Y			
~~1799~~		~~7~~	~~BLACK CHERRY~~	~~PRUNUS SEROTINA~~	~~Poor~~		~~Y~~			
1800		7	SHAGBARK HICKORY	CARYA OVATA	Fair		Y			
1801		13	SHAGBARK HICKORY	CARYA OVATA	Fair		Y			
1802		19	SHAGBARK HICKORY	CARYA OVATA	Fair	HT	Y			
~~1803~~		~~6~~	~~AMERICAN ELM~~	~~ULMUS AMERICANA~~	~~Dead~~		~~Y~~			
1804		6	WHITE OAK	QUERCUS ALBA	Fair		Y			
1805		6	WHITE OAK	QUERCUS ALBA	Fair		Y			
1806		6	SHAGBARK HICKORY	CARYA OVATA	Fair		Y			
1807		7	WHITE OAK	QUERCUS ALBA	Fair		Y			
1808		6	WHITE OAK	QUERCUS ALBA	Fair		Y			
1809		33	WHITE OAK	QUERCUS ALBA	Fair	HT	Y			
1810		8	WHITE OAK	QUERCUS ALBA	Fair		Y			
1811		12	WHITE OAK	QUERCUS ALBA	Fair		Y			
1812		6	SHAGBARK HICKORY	CARYA OVATA	Fair		Y			
1813		10	WHITE OAK	QUERCUS ALBA	Fair		Y			
1814		8	BLACK OAK	QUERCUS VELUTINA	Fair		Y			
1815		12	BLACK OAK	QUERCUS VELUTINA	Fair		Y			
1816		14	WHITE OAK	QUERCUS ALBA	Fair		Y			
1817		9	BLACK OAK	QUERCUS VELUTINA	Fair		Y			
1818		12	BLACK OAK	QUERCUS VELUTINA	Fair		Y			
1819		7	SHELLBARK HICKORY	CARYA LACINIOSA	Fair		Y			
1820		6	SHELLBARK HICKORY	CARYA LACINIOSA	Fair		Y			
~~1821~~		~~6~~	~~BLACK CHERRY~~	~~PRUNUS SEROTINA~~	~~Dead~~		~~Y~~			
1822		8	SHELLBARK HICKORY	CARYA LACINIOSA	Fair		Y			
1823		13	SHELLBARK HICKORY	CARYA LACINIOSA	Fair		Y			
1824		12	SHELLBARK HICKORY	CARYA LACINIOSA	Fair		Y			
1825		12	SHELLBARK HICKORY	CARYA LACINIOSA	Fair		Y			
1826		16	SHELLBARK HICKORY	CARYA LACINIOSA	Fair	HT	Y			
1827		15	SHELLBARK HICKORY	CARYA LACINIOSA	Fair		Y			
1828		13	SHELLBARK HICKORY	CARYA LACINIOSA	Fair		Y			
~~1829~~		~~9~~	~~SHELLBARK HICKORY~~	~~CARYA LACINIOSA~~	~~Poor~~		~~Y~~			
1830		6	SHELLBARK HICKORY	CARYA LACINIOSA	Fair		Y			
1831		13	BLACK OAK	QUERCUS VELUTINA	Fair		Y			
1832		12	BLACK OAK	QUERCUS VELUTINA	Fair		Y			
1833		8	BLACK OAK	QUERCUS VELUTINA	Fair		Y			
~~1834~~		~~7~~	~~AMERICAN ELM~~	~~ULMUS AMERICANA~~	~~Undesireable~~		~~Y~~			
~~1835~~		~~9~~	~~AMERICAN ELM~~	~~ULMUS AMERICANA~~	~~Undesireable~~		~~Y~~			
1836		6	SHELLBARK HICKORY	CARYA LACINIOSA	Fair		Y			
1837		10	SHELLBARK HICKORY	CARYA LACINIOSA	Fair		Y			
1838		8	RED OAK	QUERCUS RUBRA	Fair		Y			
~~1839~~		~~18~~	~~AMERICAN ELM~~	~~ULMUS AMERICANA~~	~~Dead~~		~~Y~~			
~~1840~~		~~12~~	~~AMERICAN ELM~~	~~ULMUS AMERICANA~~	~~Dead~~		~~Y~~			
1841		7	SHELLBARK HICKORY	CARYA LACINIOSA	Fair		Y			
1842		6	SHELLBARK HICKORY	CARYA LACINIOSA	Fair		Y			
~~1843~~		~~15~~	~~AMERICAN ELM~~	~~ULMUS AMERICANA~~	~~Dead~~		~~Y~~			
1844		7	SHELLBARK HICKORY	CARYA LACINIOSA	Fair		Y			
~~1845~~		~~6~~	~~BLACK CHERRY~~	~~PRUNUS SEROTINA~~	~~Dead~~		~~Y~~			
~~1846~~		~~9~~	~~BLACK CHERRY~~	~~PRUNUS SEROTINA~~	~~Poor~~		~~Y~~			
1847		18	SHAGBARK HICKORY	CARYA OVATA	Fair	HT	Y			
1848		6	SHELLBARK HICKORY	CARYA LACINIOSA	Fair		Y			

ID	REMOVE?	DBH	Common Name	Botanical Name	Condition	Heritage?	Woodland?	If Removed, Within Building, Structure, Street or Driveway?	Mitigate?	Mitigation Inches
1849		6	SHAGBARK HICKORY	CARYA OVATA	Fair		Y			
1850		6	SHELLBARK HICKORY	CARYA LACINIOSA	Fair		Y			
1851		6	SHAGBARK HICKORY	CARYA OVATA	Fair		Y			
~~1852~~		~~9~~	~~BLACK CHERRY~~	~~PRUNUS SEROTINA~~	~~Dead~~		~~Y~~			
1853		23	SHAGBARK HICKORY	CARYA OVATA	Fair	HT	Y			
1854		11	BLACK CHERRY	PRUNUS SEROTINA	Fair		Y			
1855		23	BURR OAK	QUERCUS MACROCARPA	Fair	HT	Y			
1856		9	BLACK OAK	QUERCUS VELUTINA	Fair		Y			
1857		12	BLACK OAK	QUERCUS VELUTINA	Fair		Y			
1858		6	SHELLBARK HICKORY	CARYA LACINIOSA	Fair		Y			
~~1859~~		~~12~~	~~AMERICAN ELM~~	~~ULMUS AMERICANA~~	~~Dead~~		~~Y~~			
~~1860~~		~~7~~	~~AMERICAN ELM~~	~~ULMUS AMERICANA~~	~~Dead~~		~~Y~~			
~~1861~~		~~7~~	~~AMERICAN ELM~~	~~ULMUS AMERICANA~~	~~Dead~~		~~Y~~			
~~1862~~		~~6~~	~~BLACK CHERRY~~	~~PRUNUS SEROTINA~~	~~Dead~~		~~Y~~			
1863		6	SHAGBARK HICKORY	CARYA OVATA	Fair		Y			
~~1864~~		~~11~~	~~BLACK CHERRY~~	~~PRUNUS SEROTINA~~	~~Dead~~		~~Y~~			
1865		6	SHELLBARK HICKORY	CARYA LACINIOSA	Fair		Y			
1866		7	SHELLBARK HICKORY	CARYA LACINIOSA	Fair		Y			
~~1867~~		~~9~~	~~AMERICAN ELM~~	~~ULMUS AMERICANA~~	~~Dead~~		~~Y~~			
~~1868~~		~~12~~	~~BLACK CHERRY~~	~~PRUNUS SEROTINA~~	~~Poor~~		~~Y~~			
1869		7	BLACK OAK	QUERCUS VELUTINA	Fair		Y			
1870		8	BLACK OAK	QUERCUS VELUTINA	Fair		Y			
1871		6	SHELLBARK HICKORY	CARYA LACINIOSA	Fair		Y			
1872		9	SHAGBARK HICKORY	CARYA OVATA	Fair		Y			
1873		13	BLACK CHERRY	PRUNUS SEROTINA	Fair		Y			
1874		10	BLACK CHERRY	PRUNUS SEROTINA	Fair		Y			
~~1875~~		~~10~~	~~APPLE~~	~~MALUS PUMILA~~	~~Poor~~		~~Y~~			
1876		6	SOUR CHERRY	PRUNUS CERASUS	Fair		Y			
~~1877~~		~~11~~	~~AMERICAN ELM~~	~~ULMUS AMERICANA~~	~~Poor~~		~~Y~~			
~~1878~~		~~9~~	~~SHELLBARK HICKORY~~	~~CARYA LACINIOSA~~	~~Dead~~		~~Y~~			
1879	REMOVE	7	PIGNUT HICKORY	CARYA GLABRA	Fair		Y	Y	N	
1880	REMOVE	13	BLACK CHERRY	PRUNUS SEROTINA	Fair		Y	Y	N	
1881	REMOVE	7	SHELLBARK HICKORY	CARYA LACINIOSA	Fair		Y	Y	N	
1882	REMOVE	9	BLACK CHERRY	PRUNUS SEROTINA	Fair		Y	Y	N	
1883		13	BLACK CHERRY	PRUNUS SEROTINA	Fair		Y			
~~1884~~		~~8~~	~~BOX ELDER~~	~~ACER NEGUNDO~~	~~Undesireable~~		~~Y~~			
1885		8	SHELLBARK HICKORY	CARYA LACINIOSA	Fair		Y			
~~1886~~		~~6~~	~~BLACK CHERRY~~	~~PRUNUS SEROTINA~~	~~Dead~~		~~Y~~			
~~1887~~		~~9~~	~~SHELLBARK HICKORY~~	~~CARYA LACINIOSA~~	~~Dead~~		~~Y~~			
1888		8	SHELLBARK HICKORY	CARYA LACINIOSA	Fair		Y			
~~1889~~		~~11~~	~~AMERICAN ELM~~	~~ULMUS AMERICANA~~	~~Dead~~		~~Y~~			
~~1890~~		~~11~~	~~BOX ELDER~~	~~ACER NEGUNDO~~	~~Undesireable~~		~~Y~~			
1891		14	PIGNUT HICKORY	CARYA GLABRA	Fair		Y			
1892		10	SLIPPERY ELM	ULMUS RUBRA	Fair		Y			
~~1893~~		~~13~~	~~BLACK CHERRY~~	~~PRUNUS SEROTINA~~	~~Dead~~		~~Y~~			
1894	REMOVE	10	BLACK OAK	QUERCUS VELUTINA	Fair		Y	N	Y	10
1895		6	SHAGBARK HICKORY	CARYA OVATA	Fair		Y			
1896		9	BLACK CHERRY	PRUNUS SEROTINA	Fair		Y			
1897		10	BLACK CHERRY	PRUNUS SEROTINA	Fair		Y			
1898		21	BLACK CHERRY	PRUNUS SEROTINA	Fair	HT	Y			
~~1899~~		~~6~~	~~BOX ELDER~~	~~ACER NEGUNDO~~	~~Dead~~		~~Y~~			
1900		12	PIGNUT HICKORY	CARYA GLABRA	Fair		Y			
1901		6	SHAGBARK HICKORY	CARYA OVATA	Fair		Y			
1902		13	BLACK OAK	QUERCUS VELUTINA	Fair		Y			
1903		27	SHELLBARK HICKORY	CARYA LACINIOSA	Fair	HT	Y			
~~1904~~	~~REMOVE~~	~~10~~	~~EASTERN COTTONWOOD~~	~~POPULUS DELTOIDES~~	~~Undesireable~~		~~N~~	~~N~~	~~N~~	
~~1905~~	~~REMOVE~~	~~6~~	~~EASTERN COTTONWOOD~~	~~POPULUS DELTOIDES~~	~~Undesireable~~		~~N~~	~~N~~	~~N~~	
~~1906~~	~~REMOVE~~	~~6~~	~~BOX ELDER~~	~~ACER NEGUNDO~~	~~Undesireable~~		~~N~~	~~N~~	~~N~~	
~~1907~~	~~REMOVE~~	~~7~~	~~EASTERN COTTONWOOD~~	~~POPULUS DELTOIDES~~	~~Undesireable~~		~~N~~	~~N~~	~~N~~	
~~1908~~	~~REMOVE~~	~~9~~	~~EASTERN COTTONWOOD~~	~~POPULUS DELTOIDES~~	~~Undesireable~~		~~N~~	~~N~~	~~N~~	
~~1909~~		~~6~~	~~WILLOW~~	~~SALIX~~	~~Undesireable~~		~~N~~			
~~1910~~		~~8~~	~~WILLOW~~	~~SALIX~~	~~Undesireable~~		~~N~~			
~~1911~~		~~6~~	~~EASTERN COTTONWOOD~~	~~POPULUS DELTOIDES~~	~~Undesireable~~		~~N~~			
~~1912~~		~~6~~	~~WILLOW~~	~~SALIX~~	~~Undesireable~~		~~N~~			
~~1913~~		~~6~~	~~EASTERN COTTONWOOD~~	~~POPULUS DELTOIDES~~	~~Undesireable~~		~~N~~			
~~1914~~		~~6~~	~~EASTERN COTTONWOOD~~	~~POPULUS DELTOIDES~~	~~Undesireable~~		~~N~~			
~~1915~~		~~6~~	~~EASTERN COTTONWOOD~~	~~POPULUS DELTOIDES~~	~~Undesireable~~		~~N~~			
~~1916~~		~~6~~	~~EASTERN COTTONWOOD~~	~~POPULUS DELTOIDES~~	~~Undesireable~~		~~N~~			
~~1917~~		~~6~~	~~EASTERN COTTONWOOD~~	~~POPULUS DELTOIDES~~	~~Undesireable~~		~~N~~			
~~1918~~		~~7~~	~~EASTERN COTTONWOOD~~	~~POPULUS DELTOIDES~~	~~Undesireable~~		~~N~~			
~~1919~~		~~6~~	~~EASTERN COTTONWOOD~~	~~POPULUS DELTOIDES~~	~~Undesireable~~		~~N~~			
~~1920~~		~~6~~	~~EASTERN COTTONWOOD~~	~~POPULUS DELTOIDES~~	~~Undesireable~~		~~N~~			
~~1921~~		~~7~~	~~EASTERN COTTONWOOD~~	~~POPULUS DELTOIDES~~	~~Undesireable~~		~~N~~			
~~1922~~		~~7~~	~~EASTERN COTTONWOOD~~	~~POPULUS DELTOIDES~~	~~Undesireable~~		~~N~~			
~~1923~~		~~7~~	~~EASTERN COTTONWOOD~~	~~POPULUS DELTOIDES~~	~~Undesireable~~		~~N~~			
~~1924~~		~~6~~	~~EASTERN COTTONWOOD~~	~~POPULUS DELTOIDES~~	~~Undesireable~~		~~N~~			
~~1925~~		~~7~~	~~EASTERN COTTONWOOD~~	~~POPULUS DELTOIDES~~	~~Undesireable~~		~~N~~			
~~1926~~		~~8~~	~~EASTERN COTTONWOOD~~	~~POPULUS DELTOIDES~~	~~Undesireable~~		~~N~~			
~~1927~~		~~6~~	~~WILLOW~~	~~SALIX~~	~~Undesireable~~		~~N~~			
~~1928~~		~~8~~	~~EASTERN COTTONWOOD~~	~~POPULUS DELTOIDES~~	~~Undesireable~~		~~N~~			
~~1929~~		~~6~~	~~EASTERN COTTONWOOD~~	~~POPULUS DELTOIDES~~	~~Undesireable~~		~~N~~			
~~1930~~		~~6~~	~~EASTERN COTTONWOOD~~	~~POPULUS DELTOIDES~~	~~Undesireable~~		~~N~~			
~~1931~~		~~11~~	~~EASTERN COTTONWOOD~~	~~POPULUS DELTOIDES~~	~~Undesireable~~		~~N~~			
~~1932~~		~~6~~	~~EASTERN COTTONWOOD~~	~~POPULUS DELTOIDES~~	~~Undesireable~~		~~N~~			
~~1933~~		~~7~~	~~EASTERN COTTONWOOD~~	~~POPULUS DELTOIDES~~	~~Undesireable~~		~~N~~			
~~1934~~		~~7~~	~~EASTERN COTTONWOOD~~	~~POPULUS DELTOIDES~~	~~Undesireable~~		~~N~~			
~~1935~~		~~6~~	~~EASTERN COTTONWOOD~~	~~POPULUS DELTOIDES~~	~~Undesireable~~		~~N~~			
~~1936~~		~~6~~	~~EASTERN COTTONWOOD~~	~~POPULUS DELTOIDES~~	~~Undesireable~~		~~N~~			
~~1937~~		~~7~~	~~WILLOW~~	~~SALIX~~	~~Undesireable~~		~~N~~			
~~1938~~		~~11~~	~~EASTERN COTTONWOOD~~	~~POPULUS DELTOIDES~~	~~Undesireable~~		~~N~~			
~~1939~~		~~10~~	~~EASTERN COTTONWOOD~~	~~POPULUS DELTOIDES~~	~~Undesireable~~		~~N~~			
~~1940~~		~~6~~	~~WILLOW~~	~~SALIX~~	~~Undesireable~~		~~N~~			
~~1941~~		~~7~~	~~EASTERN COTTONWOOD~~	~~POPULUS DELTOIDES~~	~~Undesireable~~		~~N~~			
~~1942~~		~~7~~	~~EASTERN COTTONWOOD~~	~~POPULUS DELTOIDES~~	~~Undesireable~~		~~N~~			
~~1943~~		~~7~~	~~EASTERN COTTONWOOD~~	~~POPULUS DELTOIDES~~	~~Undesireable~~		~~N~~			
~~1944~~		~~7~~	~~EASTERN COTTONWOOD~~	~~POPULUS DELTOIDES~~	~~Undesireable~~		~~N~~			
~~1945~~		~~6~~	~~EASTERN COTTONWOOD~~	~~POPULUS DELTOIDES~~	~~Undesireable~~		~~N~~			
~~1946~~		~~7~~	~~EASTERN COTTONWOOD~~	~~POPULUS DELTOIDES~~	~~Undesireable~~		~~N~~			
~~1947~~		~~8~~	~~EASTERN COTTONWOOD~~	~~POPULUS DELTOIDES~~	~~Undesireable~~		~~N~~			
~~1948~~		~~6~~	~~EASTERN COTTONWOOD~~	~~POPULUS DELTOIDES~~	~~Undesireable~~		~~N~~			
~~1949~~		~~6~~	~~EASTERN COTTONWOOD~~	~~POPULUS DELTOIDES~~	~~Undesireable~~		~~N~~			
~~1950~~		~~6~~	~~EASTERN COTTONWOOD~~	~~POPULUS DELTOIDES~~	~~Undesireable~~		~~N~~			
~~1951~~		~~6~~	~~EASTERN COTTONWOOD~~	~~POPULUS DELTOIDES~~	~~Undesireable~~		~~N~~			
~~1952~~		~~10~~	~~EASTERN COTTONWOOD~~	~~POPULUS DELTOIDES~~	~~Undesireable~~		~~N~~			
~~1953~~		~~6~~	~~EASTERN COTTONWOOD~~	~~POPULUS DELTOIDES~~	~~Undesireable~~		~~N~~			
~~1954~~		~~6~~	~~EASTERN COTTONWOOD~~	~~POPULUS DELTOIDES~~	~~Undesireable~~		~~N~~			
~~1955~~		~~6~~	~~EASTERN COTTONWOOD~~	~~POPULUS DELTOIDES~~	~~Undesireable~~		~~N~~			
~~1956~~		~~6~~	~~EASTERN COTTONWOOD~~	~~POPULUS DELTOIDES~~	~~Undesireable~~		~~N~~			
~~1957~~		~~9~~	~~EASTERN COTTONWOOD~~	~~POPULUS DELTOIDES~~	~~Undesireable~~		~~N~~			
~~1958~~		~~7~~	~~EASTERN COTTONWOOD~~	~~POPULUS DELTOIDES~~	~~Undesireable~~		~~N~~			
~~1959~~		~~7~~	~~EASTERN COTTONWOOD~~	~~POPULUS DELTOIDES~~	~~Undesireable~~		~~N~~			
~~1960~~		~~7~~	~~EASTERN COTTONWOOD~~	~~POPULUS DELTOIDES~~	~~Undesireable~~		~~N~~			
~~1961~~		~~10~~	~~EASTERN COTTONWOOD~~	~~POPULUS DELTOIDES~~	~~Undesireable~~		~~N~~			
~~1962~~		~~8~~	~~EASTERN COTTONWOOD~~	~~POPULUS DELTOIDES~~	~~Undesireable~~		~~N~~			
~~1963~~		~~8~~	~~EASTERN COTTONWOOD~~	~~POPULUS DELTOIDES~~	~~Undesireable~~		~~N~~			
~~1964~~		~~6~~	~~EASTERN COTTONWOOD~~	~~POPULUS DELTOIDES~~	~~Undesireable~~		~~N~~			
~~1965~~		~~6~~	~~WILLOW~~	~~SALIX~~	~~Undesireable~~		~~N~~			
10144		18	SHAGBARK HICKORY	CARYA OVATA	Fair	HT	Y			
~~10145~~		~~8~~	~~BLACK CHERRY~~	~~PRUNUS SEROTINA~~	~~Poor~~		Y			
~~10146~~		~~7~~	~~RED OAK~~	~~QUERCUS RUBRA~~	~~Poor~~		Y			
10147		7	RED OAK	QUERCUS RUBRA	Fair		Y			
10148		23	SHAGBARK HICKORY	CARYA OVATA	Fair	HT	Y			
~~10149~~		~~23~~	~~PIGNUT HICKORY~~	~~CARYA GLABRA~~	~~Very Poor~~		Y			
~~10150~~		~~10~~	~~ELM~~	~~ULMUS~~	~~Poor~~		Y			
10151		15	PIGNUT HICKORY	CARYA GLABRA	Fair		Y			
10194		10	SHAGBARK HICKORY	CARYA OVATA	Fair		Y			
10195		14	SHAGBARK HICKORY	CARYA OVATA	Fair		Y			
11012		17	SHAGBARK HICKORY	CARYA OVATA	Fair	HT	Y			
11022		12	SHAGBARK HICKORY	CARYA OVATA	Fair		Y			
~~11023~~		~~28~~	~~RED OAK~~	~~QUERCUS RUBRA~~	~~Poor~~		Y			
11026		12	SHAGBARK HICKORY	CARYA OVATA	Fair		Y			
11027		10	SHAGBARK HICKORY	CARYA OVATA	Fair		Y			
11028		11	SHAGBARK HICKORY	CARYA OVATA	Fair		Y			
11029		30	RED OAK	QUERCUS RUBRA	Fair	HT	Y			
11030		16	RED OAK	QUERCUS RUBRA	Fair	HT	Y			
11031		23	SHAGBARK HICKORY	CARYA OVATA	Fair	HT	Y			
11032		9	BITTERNUT HICKORY	CARYA CORDIFORMIS	Fair		Y			
11033		7	BITTERNUT HICKORY	CARYA CORDIFORMIS	Fair		Y			
11034		7	SHAGBARK HICKORY	CARYA OVATA	Fair		Y			
11035		7	BITTERNUT HICKORY	CARYA CORDIFORMIS	Fair		Y			
11036		17	BITTERNUT HICKORY	CARYA CORDIFORMIS	Fair	HT	Y			
11037		21	BITTERNUT HICKORY	CARYA CORDIFORMIS	Fair	HT	Y			
~~11038~~		~~10~~	~~SILVER MAPLE~~	~~ACER SACCHARINUM~~	~~Fair~~		Y			
11039		18	SHAGBARK HICKORY	CARYA OVATA	Fair	HT	Y			
11040		14	WHITE OAK	QUERCUS ALBA	Fair		Y			
~~11041~~		~~14~~	~~DEAD~~	~~DEAD~~	~~Dead~~		Y			
11042		7	SHAGBARK HICKORY	CARYA OVATA	Fair		Y			
11043		23	RED OAK	QUERCUS RUBRA	Fair	HT	Y			
~~11044~~		~~8~~	~~DEAD~~	~~DEAD~~	~~Dead~~		Y			
~~11045~~		~~9~~	~~DEAD~~	~~DEAD~~	~~Dead~~		Y			
11046		18	BITTERNUT HICKORY	CARYA CORDIFORMIS	Fair	HT	Y			
11047		34	SHAGBARK HICKORY	CARYA OVATA	Fair	HT	Y			
11048		16	SHAGBARK HICKORY	CARYA OVATA	Fair	HT	Y			
11049		8	RED OAK	QUERCUS RUBRA	Fair		Y			
11050		14	BITTERNUT HICKORY	CARYA CORDIFORMIS	Fair		Y			
11051		7	RED OAK	QUERCUS RUBRA	Fair		Y			
11052		8	PIGNUT HICKORY	CARYA GLABRA	Fair		Y			
11053		8	BITTERNUT HICKORY	CARYA CORDIFORMIS	Fair		Y			
11054		9	BITTERNUT HICKORY	CARYA CORDIFORMIS	Fair		Y			
11055		25	SHAGBARK HICKORY	CARYA OVATA	Fair	HT	Y			
11056		12	SHAGBARK HICKORY	CARYA OVATA	Fair		Y			
11057		6	SHAGBARK HICKORY	CARYA OVATA	Fair		Y			
11058		11	SHAGBARK HICKORY	CARYA OVATA	Fair		Y			
11059		7	BITTERNUT HICKORY	CARYA CORDIFORMIS	Fair		Y			
11060		8	SHAGBARK HICKORY	CARYA OVATA	Fair		Y			
11061		16	WHITE OAK	QUERCUS ALBA	Fair	HT	Y			
11062		14	PIGNUT HICKORY	CARYA GLABRA	Fair		Y			
11063		9	PIGNUT HICKORY	CARYA GLABRA	Fair		Y			
11064		7	SHAGBARK HICKORY	CARYA OVATA	Fair		Y			
11065		9	SHAGBARK HICKORY	CARYA OVATA	Fair		Y			
11066		8	PIGNUT HICKORY	CARYA GLABRA	Fair		Y			
11067		7	PIGNUT HICKORY	CARYA GLABRA	Fair		Y			
~~11068~~		~~11~~	~~COTTONWOOD~~	~~POPULUS DELTOIDES~~	~~Fair~~		Y			
~~11069~~		~~20~~	~~SILVER MAPLE~~	~~ACER SACCHARINUM~~	~~Fair~~		Y			

ID	REMOVE?	DBH	Common Name	Botanical Name	Condition	Heritage?	Woodland?	If Removed, Within Building, Structure, Street or Driveway?	Mitigate?	Mitigation Inches
~~11070~~		~~16~~	~~SHAGBARK HICKORY~~	~~CARYA OVATA~~	~~Poor~~		Y			
11071		9	RED OAK	QUERCUS RUBRA	Fair		Y			
~~11072~~		~~7~~	~~BLACK CHERRY~~	~~PRUNUS SEROTINA~~	~~Poor~~		Y			
11073		8	PIGNUT HICKORY	CARYA GLABRA	Fair		Y			
11074		14	SHAGBARK HICKORY	CARYA OVATA	Fair		Y			
11075		8	PIGNUT HICKORY	CARYA GLABRA	Fair		Y			
11076		14	PIGNUT HICKORY	CARYA GLABRA	Fair		Y			
~~11078~~		~~10~~	~~PIGNUT HICKORY~~	~~CARYA GLABRA~~	~~Poor~~		Y			
11079		16	PIGNUT HICKORY	CARYA GLABRA	Fair	HT	Y			
~~11081~~		~~10~~	~~SHAGBARK HICKORY~~	~~CARYA OVATA~~	~~Poor~~		Y			
11082		17	PIGNUT HICKORY	CARYA GLABRA	Fair	HT	Y			
11083		20	PIGNUT HICKORY	CARYA GLABRA	Fair	HT	Y			
~~11084~~		~~21~~	~~RED OAK~~	~~QUERCUS RUBRA~~	~~Poor~~		Y			
11085		16	PIGNUT HICKORY	CARYA GLABRA	Fair	HT	Y			
11086		10	PIGNUT HICKORY	CARYA GLABRA	Fair		Y			
11087		16	PIGNUT HICKORY	CARYA GLABRA	Fair	HT	Y			
11088		10	SHAGBARK HICKORY	CARYA OVATA	Fair		Y			
11089		18	PIGNUT HICKORY	CARYA GLABRA	Fair	HT	Y			
11090		16	SHAGBARK HICKORY	CARYA OVATA	Fair	HT	Y			
11091		7	CHINKAPIN OAK	QUERCUS MUEHLENBERGII	Fair		Y			
~~11092~~		~~7~~	~~DEAD~~	~~DEAD~~	~~Dead~~		Y			
~~11093~~		~~8~~	~~SUGAR MAPLE~~	~~ACER SACCHARUM~~	~~Poor~~		Y			
~~11094~~		~~8~~	~~DEAD~~	~~DEAD~~	~~Fair~~		Y			
11095		7	STRIPE MAPLE	ACER PENSYLVANICUM	Fair		Y			
11096		15	PIGNUT HICKORY	CARYA GLABRA	Fair		Y			
~~11097~~		~~18~~	~~SHAGBARK HICKORY~~	~~CARYA OVATA~~	~~Poor~~		Y			
~~11098~~		~~8~~	~~DEAD~~	~~DEAD~~	~~Dead~~		Y			
11099		32	SHAGBARK HICKORY	CARYA OVATA	Fair	HT	Y			
11100		20	SHAGBARK HICKORY	CARYA OVATA	Fair	HT	Y			
11101		9	CHINKAPIN OAK	QUERCUS MUEHLENBERGII	Fair		Y			
11102		20	BURR OAK	QUERCUS MACROCARPA	Fair	HT	Y			
11103		7	SHAGBARK HICKORY	CARYA OVATA	Fair		Y			
11104		7	SHAGBARK HICKORY	CARYA OVATA	Fair		Y			
11105		7	SHAGBARK HICKORY	CARYA OVATA	Fair		Y			
11106		6	CHINKAPIN OAK	QUERCUS MUEHLENBERGII	Fair		Y			
11107		22	SHAGBARK HICKORY	CARYA OVATA	Fair	HT	Y			
11108		8	CHINKAPIN OAK	QUERCUS MUEHLENBERGII	Fair		Y			
~~11109~~		~~19~~	~~DEAD~~	~~DEAD~~	~~Dead~~		Y			
11110		10	CHINKAPIN OAK	QUERCUS MUEHLENBERGII	Fair		Y			
11111		21	RED OAK	QUERCUS RUBRA	Fair	HT	Y			
11112		8	CHINKAPIN OAK	QUERCUS MUEHLENBERGII	Fair		Y			
11113		8	CHINKAPIN OAK	QUERCUS MUEHLENBERGII	Fair		Y			
11114		12	PIGNUT HICKORY	CARYA GLABRA	Fair		Y			
11115		17	BURR OAK	QUERCUS MACROCARPA	Fair	HT	Y			
11116		14	BURR OAK	QUERCUS MACROCARPA	Fair		Y			
11117		9	PIGNUT HICKORY	CARYA GLABRA	Fair		Y			
~~11118~~		~~6~~	~~DEAD~~	~~DEAD~~	~~Dead~~		Y			
11119		10	CHINKAPIN OAK	QUERCUS MUEHLENBERGII	Fair		Y			
11120		18	PIGNUT HICKORY	CARYA GLABRA	Fair	HT	Y			
11121		8	CHINKAPIN OAK	QUERCUS MUEHLENBERGII	Fair		Y			
11122		12	BITTERNUT HICKORY	CARYA CORDIFORMIS	Fair		Y			
11123		7	CHINKAPIN OAK	QUERCUS MUEHLENBERGII	Fair		Y			
11124		10	SHAGBARK HICKORY	CARYA OVATA	Fair		Y			
11125		9	SHAGBARK HICKORY	CARYA OVATA	Fair		Y			
11126		12	SHAGBARK HICKORY	CARYA OVATA	Fair		Y			
11127		13	BURR OAK	QUERCUS MACROCARPA	Fair		Y			
11128		6	CHINKAPIN OAK	QUERCUS MUEHLENBERGII	Fair		Y			
11129		13	BITTERNUT HICKORY	CARYA CORDIFORMIS	Fair		Y			
11130		14	PIGNUT HICKORY	CARYA GLABRA	Fair		Y			
11131		14	SHAGBARK HICKORY	CARYA OVATA	Fair		Y			
11132		10	PIGNUT HICKORY	CARYA GLABRA	Fair		Y			
11133		10	PIGNUT HICKORY	CARYA GLABRA	Fair		Y			
11134		16	SHAGBARK HICKORY	CARYA OVATA	Fair	HT	Y			
11135		9	CHINKAPIN OAK	QUERCUS MUEHLENBERGII	Fair		Y			
11136		17	PIGNUT HICKORY	CARYA GLABRA	Fair	HT	Y			
11137		8	CHINKAPIN OAK	QUERCUS MUEHLENBERGII	Fair		Y			
11138		11	PIGNUT HICKORY	CARYA GLABRA	Fair		Y			
11139		9	SHAGBARK HICKORY	CARYA OVATA	Fair		Y			
11140		22	PIGNUT HICKORY	CARYA GLABRA	Fair	HT	Y			
11141		8	CHINKAPIN OAK	QUERCUS MUEHLENBERGII	Fair		Y			
11142		11	PIGNUT HICKORY	CARYA GLABRA	Fair		Y			
~~11143~~		~~6~~	~~NORWAY MAPLE~~	~~ACER PLATANOIDES~~	~~Fair~~		Y			
~~11144~~		~~7~~	~~NORWAY MAPLE~~	~~ACER PLATANOIDES~~	~~Fair~~		Y			
11145		7	BURR OAK	QUERCUS MACROCARPA	Fair		Y			
11146		15	CHINKAPIN OAK	QUERCUS MUEHLENBERGII	Fair		Y			
~~11147~~		~~6~~	~~DEAD~~	~~DEAD~~	~~Dead~~		Y			
11148		15	PIGNUT HICKORY	CARYA GLABRA	Fair		Y			
11149		14	SHAGBARK HICKORY	CARYA OVATA	Fair		Y			
11160		15	SHAGBARK HICKORY	CARYA OVATA	Fair		Y			
11162		20	PIGNUT HICKORY	CARYA GLABRA	Fair	HT	Y			
~~11163~~		~~16~~	~~PIGNUT HICKORY~~	~~CARYA GLABRA~~	~~Poor~~		Y			
11164		13	PIGNUT HICKORY	CARYA GLABRA	Fair		Y			
11165		12	BITTERNUT HICKORY	CARYA CORDIFORMIS	Fair		Y			
11166		12	SHAGBARK HICKORY	CARYA OVATA	Fair		Y			
~~11167~~		~~18~~	~~PIGNUT HICKORY~~	~~CARYA GLABRA~~	~~Poor~~		Y			
11168		14	SHAGBARK HICKORY	CARYA OVATA	Fair		Y			
11169		20	BITTERNUT HICKORY	CARYA CORDIFORMIS	Fair	HT	Y			
11170		16	SHAGBARK HICKORY	CARYA OVATA	Fair	HT	Y			
11171		10	SHAGBARK HICKORY	CARYA OVATA	Fair		Y			
11172		24	RED MAPLE	ACER RUBRUM	Fair	HT	Y			
11173		14	SHAGBARK HICKORY	CARYA OVATA	Fair		Y			
11174		10	RED MAPLE	ACER RUBRUM	Fair		Y			
11175		26	PIGNUT HICKORY	CARYA GLABRA	Fair	HT	Y			
11176		15	SHAGBARK HICKORY	CARYA OVATA	Fair		Y			
11177		7	BITTERNUT HICKORY	CARYA CORDIFORMIS	Fair		Y			
11178		14	SHAGBARK HICKORY	CARYA OVATA	Fair		Y			
11179		16	PIGNUT HICKORY	CARYA GLABRA	Fair	HT	Y			
11180		9	SHAGBARK HICKORY	CARYA OVATA	Fair		Y			
11181		18	BITTERNUT HICKORY	CARYA CORDIFORMIS	Fair	HT	Y			
11182		18	SHAGBARK HICKORY	CARYA OVATA	Fair	HT	Y			
11183		18	PIGNUT HICKORY	CARYA GLABRA	Fair	HT	Y			
11184		10	BURR OAK	QUERCUS MACROCARPA	Fair		Y			
11185		18	PIGNUT HICKORY	CARYA GLABRA	Fair	HT	Y			
11186		10	SHAGBARK HICKORY	CARYA OVATA	Fair		Y			
11187		12	SHAGBARK HICKORY	CARYA OVATA	Fair		Y			
11188		10	SHAGBARK HICKORY	CARYA OVATA	Fair		Y			
11189		6	BITTERNUT HICKORY	CARYA CORDIFORMIS	Fair		Y			
11190		21	PIGNUT HICKORY	CARYA GLABRA	Fair	HT	Y			
11191		8	BITTERNUT HICKORY	CARYA CORDIFORMIS	Fair		Y			
11192		8	SHAGBARK HICKORY	CARYA OVATA	Fair		Y			
11193		12	BITTERNUT HICKORY	CARYA CORDIFORMIS	Fair		Y			
11194		14	SHAGBARK HICKORY	CARYA OVATA	Fair		Y			
11195		14	SHAGBARK HICKORY	CARYA OVATA	Fair		Y			
11196		16	PIGNUT HICKORY	CARYA GLABRA	Fair	HT	Y			
11197		7	SHAGBARK HICKORY	CARYA OVATA	Fair		Y			
11198		12	BLACK WALNUT	JUGLANS NIGRA	Fair		Y			
11199		18	PIGNUT HICKORY	CARYA GLABRA	Fair	HT	Y			
11200		8	BITTERNUT HICKORY	CARYA CORDIFORMIS	Fair		Y			
11201		10	PIGNUT HICKORY	CARYA GLABRA	Fair		Y			
11202		7	SHAGBARK HICKORY	CARYA OVATA	Fair		Y			
11203		8	BITTERNUT HICKORY	CARYA CORDIFORMIS	Fair		Y			
11204		7	BITTERNUT HICKORY	CARYA CORDIFORMIS	Fair		Y			
11205		7	SHAGBARK HICKORY	CARYA OVATA	Fair		Y			
11206		14	PIGNUT HICKORY	CARYA GLABRA	Fair		Y			
11207		20	PIGNUT HICKORY	CARYA GLABRA	Fair	HT	Y			
11208		16	PIGNUT HICKORY	CARYA GLABRA	Fair	HT	Y			
11209		24	PIGNUT HICKORY	CARYA GLABRA	Fair	HT	Y			
11210		14	RED OAK	QUERCUS RUBRA	Fair		Y			
11211		20	PIGNUT HICKORY	CARYA GLABRA	Fair	HT	Y			
11212		14	SHAGBARK HICKORY	CARYA OVATA	Fair		Y			
11213		18	SHAGBARK HICKORY	CARYA OVATA	Fair	HT	Y			
11214		20	PIGNUT HICKORY	CARYA GLABRA	Fair	HT	Y			
11215		8	CHINKAPIN OAK	QUERCUS MUEHLENBERGII	Fair		Y			
11216		9	SHAGBARK HICKORY	CARYA OVATA	Fair		Y			
11217		6	PIGNUT HICKORY	CARYA GLABRA	Fair		Y			
11218		14	SHAGBARK HICKORY	CARYA OVATA	Fair		Y			
11219		9	PIGNUT HICKORY	CARYA GLABRA	Fair		Y			
11220		10	PIGNUT HICKORY	CARYA GLABRA	Fair		Y			
11221		16	SHAGBARK HICKORY	CARYA OVATA	Fair	HT	Y			
11222		14	SHAGBARK HICKORY	CARYA OVATA	Fair		Y			
~~11223~~		~~7~~	~~DEAD~~	~~DEAD~~	~~Dead~~		Y			
~~11224~~		~~7~~	~~DEAD~~	~~DEAD~~	~~Dead~~		Y			
11225		14	CHINKAPIN OAK	QUERCUS MUEHLENBERGII	Fair		Y			
~~11226~~		~~10~~	~~NORWAY MAPLE~~	~~ACER PLATANOIDES~~	~~Fair~~		Y			
11227		7	CHINKAPIN OAK	QUERCUS MUEHLENBERGII	Fair		Y			
11228		12	SHAGBARK HICKORY	CARYA OVATA	Fair		Y			
11229		12	SHAGBARK HICKORY	CARYA OVATA	Fair		Y			
11230		24	SHAGBARK HICKORY	CARYA OVATA	Fair	HT	Y			
11231		8	CHINKAPIN OAK	QUERCUS MUEHLENBERGII	Fair		Y			
11232		6	CHINKAPIN OAK	QUERCUS MUEHLENBERGII	Fair		Y			
11233		6	CHINKAPIN OAK	QUERCUS MUEHLENBERGII	Fair		Y			
11234		10	BURR OAK	QUERCUS MACROCARPA	Fair		Y			
11235		8	CHINKAPIN OAK	QUERCUS MUEHLENBERGII	Fair		Y			
11236		14	BURR OAK	QUERCUS MACROCARPA	Fair		Y			
11237		7	SHAGBARK HICKORY	CARYA OVATA	Fair		Y			
11238		20	SHAGBARK HICKORY	CARYA OVATA	Fair	HT	Y			
11239		20	SHAGBARK HICKORY	CARYA OVATA	Fair	HT	Y			
11240		10	RED MAPLE	ACER RUBRUM	Fair		Y			
~~11241~~		~~10~~	~~PIGNUT HICKORY~~	~~CARYA GLABRA~~	~~Poor~~		Y			
~~11242~~		~~6~~	~~BLACK CHERRY~~	~~PRUNUS SEROTINA~~	~~Poor~~		Y			
11243		8	ELM	ULMUS	Fair		Y			
11244		8	ELM	ULMUS	Fair		Y			
~~11245~~		~~6~~	~~BLACK CHERRY~~	~~PRUNUS SEROTINA~~	~~Poor~~		Y			
~~11248~~		~~8~~	~~COTTONWOOD~~	~~POPULUS DELTOIDES~~	~~Fair~~		N			
11252		8	BURR OAK	QUERCUS MACROCARPA	Fair		N			
11253		8	PINE	PINUS	Fair		N			
11254		8	PINE	PINUS	Fair		N			
11255		9	PINE	PINUS	Fair		N			
11256		8	RED MAPLE	ACER RUBRUM	Fair		N			
11257		9	RED MAPLE	ACER RUBRUM	Fair		N			
11258		8	RED MAPLE	ACER RUBRUM	Fair		N			
11259		9	RED MAPLE	ACER RUBRUM	Fair		N			

~~STRIKETHROUGH~~ = INVASIVE PLANT LIST

ARBOR FARMS PHASE 2

CONSTRUCTION PLANS

PART OF THE NORTHWEST 1/4 OF SECTION 26, T.3S., R.6E., PITTSFIELD TOWNSHIP, WASHTENAW COUNTY, MICHIGAN

ENGINEERS . SURVEYORS
MLP AND ASSOCIATES, INC.
Michael L. Priest & Associates, Inc.
40655 Koppernick Road, Canton, MI 48187
phone: (734) 459-8560
fax: (734) 459-2585

STATUS:

REVISIONS
08-27-19 PER TWSP. & WCWRC
10-02-19 PER TWP ENG REVIEW LETTER
10-10-19 PER TWP ENG REVIEW LETTER
10-28-19 PER TWP ENG REVIEW LETTER

JOB NO. 9525.4.18

DATE: 07-10-2019
PM: GMS
ENG: GMS
SURV: AEC
CAD: ADB
\DWG\9525.dwg
VDATUM:U.S.C. & G.S.
SCALE: 1" = N/A

APPLICANT
PITTSFIELD LAND LLC
23370 COMMERCE DRIVE
FARMINGTON HILLS, MI 48335
248-921-3996
ATTN: JEFF KATZEN

SHEET 05

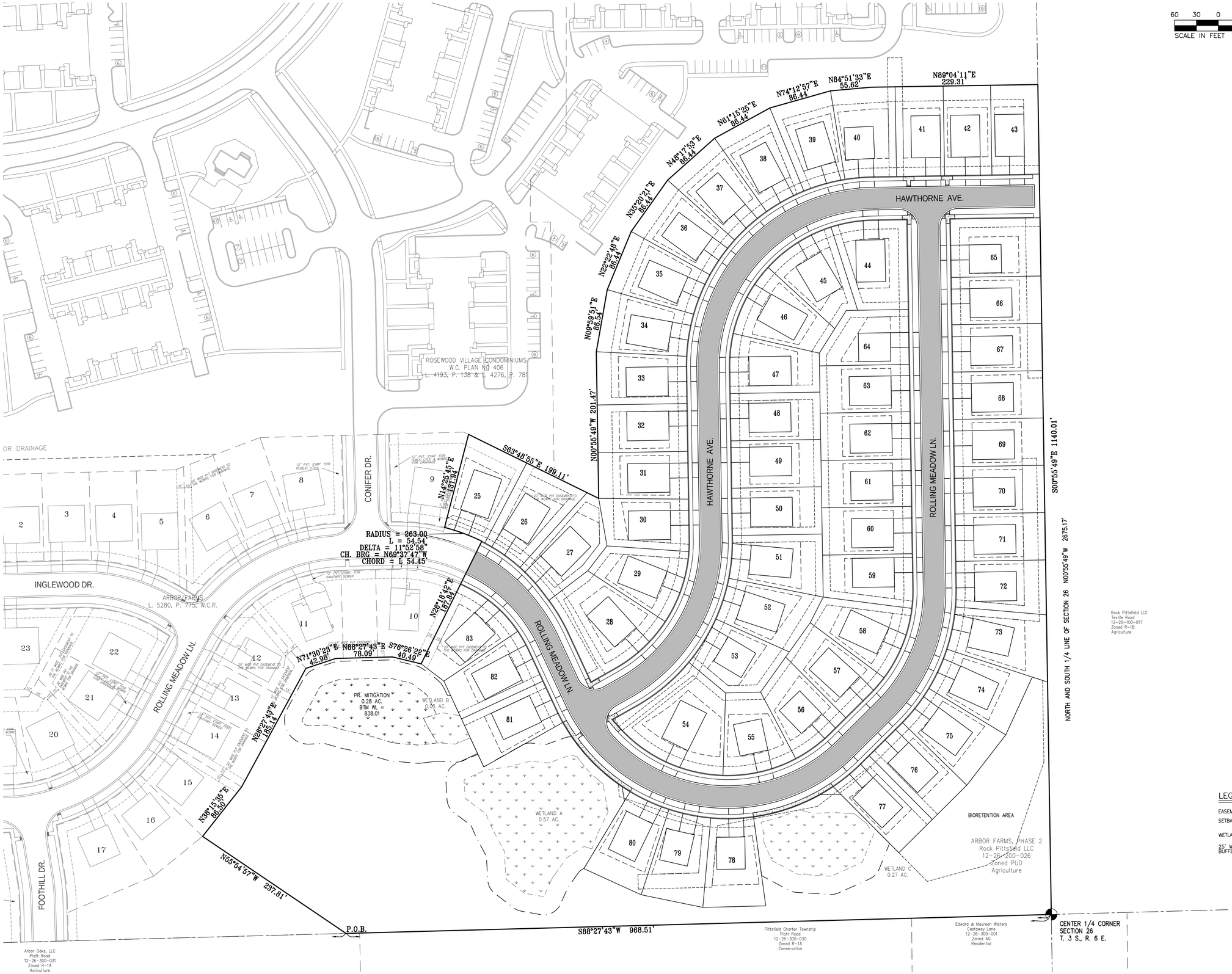

LOT AREAS

Lot No.	Lot Area (sf)	Lot Area (ac)
25	9,322	0.2140
26	9,655	0.2216
27	8,835	0.2028
28	12,590	0.2890
29	8,672	0.1991
30	8,072	0.1853
31	7,887	0.1811
32	8,077	0.1854
33	8,491	0.1949
34	8,841	0.2030
35	8,803	0.2021
36	8,803	0.2021
37	8,803	0.2021
38	8,803	0.2021
39	8,803	0.2021
40	9,801	0.2250
41	8,118	0.1864
42	7,995	0.1835
43	7,995	0.1835
44	10,642	0.2443
45	8,647	0.1985
46	8,861	0.2034
47	8,346	0.1916
48	7,995	0.1835
49	7,995	0.1835
50	7,995	0.1835
51	9,124	0.2095
52	8,765	0.2012
53	8,269	0.1898
54	14,366	0.3298
55	8,264	0.1897
56	8,114	0.1863
57	8,156	0.1872
58	8,159	0.1873
59	8,159	0.1873
60	7,995	0.1835
61	7,995	0.1835
62	7,995	0.1835
63	7,995	0.1835
64	8,178	0.1877
65	9,840	0.2259
66	7,994	0.1835
67	7,994	0.1835
68	7,993	0.1835
69	7,993	0.1835
70	7,992	0.1835
71	7,991	0.1834
72	8,509	0.1953
73	9,937	0.2281
74	8,893	0.2042
75	8,893	0.2042
76	8,070	0.1853
77	8,069	0.1852
78	8,803	0.2021
79	8,803	0.2021
80	8,803	0.2021
81	8,359	0.1919
82	8,224	0.1888
83	8,794	0.2019
	512,335	11.7612

LEGEND:

EASEMENT
SETBACK
WETLANDS
25' WETLAND BUFFER

SITE PLAN - OVERALL

ARBOR FARMS PHASE 2
CONSTRUCTION PLANS
PART OF THE NORTHWEST 1/4 OF SECTION 26, T.3S., R.6E.,
PITTSFIELD TOWNSHIP, WASHTENAW COUNTY, MICHIGAN

SHEET
06

APPLICANT
PITTSFIELD LAND LLC
23370 COMMERCE DRIVE
FARMINGTON HILLS, MI 48335
248-921-3996
ATTN: JEFF KATZEN

DATE: 07-10-2019
PM: GMS
ENG: GMS
SURV: AEC
CAD: AGB
\DWG\9525.dwg
XCAL:M/J.S.C. & G.S.
SCALE: 1" = 60'

STATUS:
REVISIONS PER TWSP. & WCWRC LETTER
10-02-19 PER TWP. ENG. REVIEW LETTER
10-08-19 PER TWP. ENG. REVIEW LETTER
10-28-19 PER TWP. ENG. REVIEW LETTER

JOB NO. 9525.4.18

ENGINEERS - SURVEYORS
MLP
AND ASSOCIATES, INC.
Michael L. Priest & Associates, Inc.
40655 Koppernick Road, Canton, MI 48187
phone: (734) 459-8560
fax: (734) 459-2585

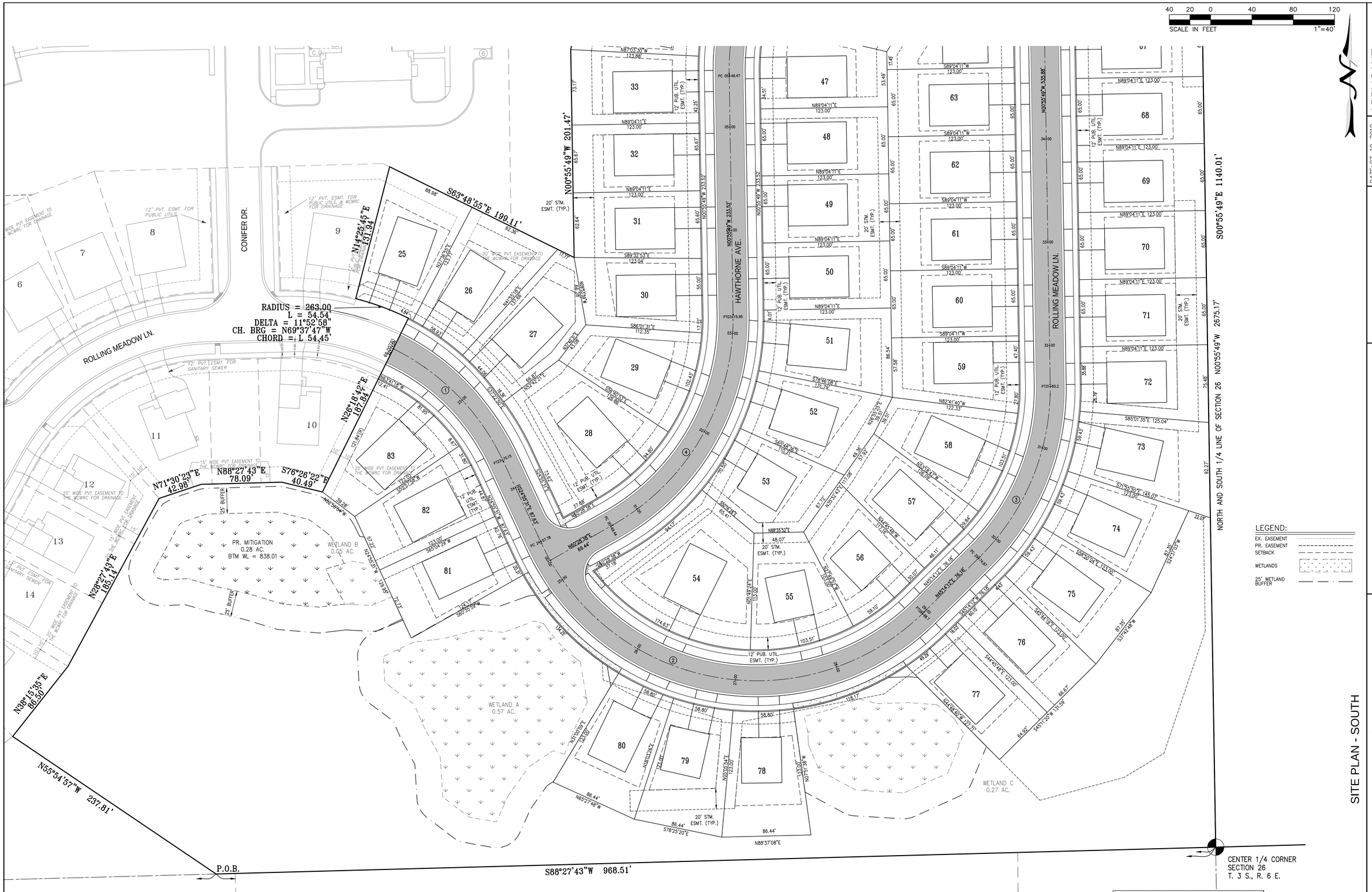

CURVE DATA

No.	Radius	Arc	Delta	Chord	Chord Brg	Tangent
1	230	155.61	38°45'47"	152.65	S 44°18'24" E	80.91
2	230	440.92	109°50'18"	376.44	N 79°50'39" W	327.49
3	230	185.33	46°10'00"	180.35	N 22°09'11" E	98.02
4	230	246.51	61°24'27"	234.88	N 29°46'25" E	136.58
5	230	361.28	90°00'00"	325.27	N 44°04'11" E	230.00

SITE PLAN - SOUTH

ARBOR FARMS PHASE 2

CONSTRUCTION PLANS

PART OF THE NORTHWEST 1/4 OF SECTION 26, T.3S., R.6E., PITTSFIELD TOWNSHIP, WASHTENAW COUNTY, MICHIGAN

SHEET 07

ENGINEERS, SURVEYORS AND ASSOCIATES, INC.
MLP
Michael L. Priest & Associates, Inc.
40655 Koppernick Road, Canton, MI 48187
phone: (734) 459-8560
fax: (734) 459-2585

STATUS:

REVISIONS
09-27-19 PER TWSP. & WCWRC LETTER
10-02-19 PER TWP ENG REVIEW LETTER
10-18-19 PER TWP ENG REVIEW LETTER
10-28-19 PER TWP ENG REVIEW LETTER

JOB NO. 9525.4.18

DATE: 07-10-2019
PM: GMS
PROJ. MGR.:
SURV: AEC
CAD: AGB
\DWG\9525.dwg
V:\ATLAS\S.C. & C.S.
SCALE: 1"= 40'

APPLICANT
PITTSFIELD LAND LLC
23370 COMMERCE DRIVE
FARMINGTON HILLS, MI 48335
248-921-3996
ATTN: JEFF KATZEN

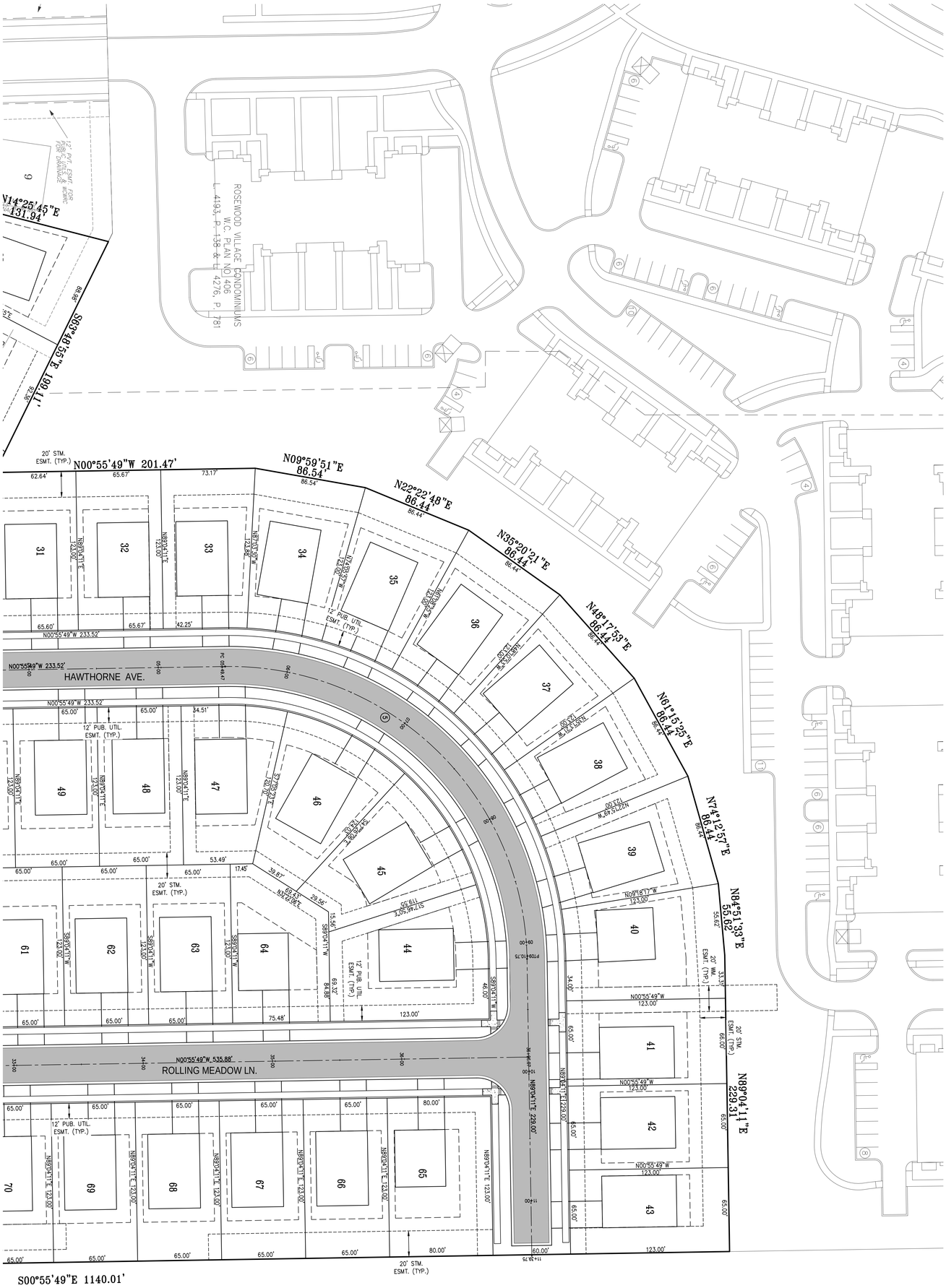

CURVE DATA							
No.	Radius	Arc	Delta	Chord Bng	Chord Dist	Tangent	
1	230	155.61	38°45'03"	S 44°18'24" E	153.45	80.91	
2	230	440.92	109°50'18"	N 79°59'39" W	376.44	327.49	
3	230	185.33	46°10'00"	N 23°50'11" E	180.35	98.02	
4	230	246.51	61°26'27"	N 29°42'25" E	234.88	136.58	
5	230	361.28	90°00'00"	N 45°04'11" E	325.27	230.00	

LEGEND:
EX. EASEMENT
PR. EASEMENT
SETBACK
WETLANDS
25' WETLAND BUFFER

SCALE IN FEET 40 20 0 40 80 120
1"=40'

SITE PLAN - NORTH

SHEET 08

ARBOR FARMS PHASE 2

CONSTRUCTION PLANS

PART OF THE NORTHWEST 1/4 OF SECTION 26, T.3S., R.6E., PITTSFIELD TOWNSHIP, WASHTENAW COUNTY, MICHIGAN

ENGINEERS, SURVEYORS
MLP AND ASSOCIATES, INC.
Michael L. Priest & Associates, Inc.
40655 Koppernick Road, Canton, MI 48187
phone: (734) 459-8560
fax: (734) 459-2585

STATUS:

REVISIONS
08-27-19 PER TWSP. & WCWRC
10-02-19 PER TWP ENG REVIEW LETTER
10-10-19 PER TWP ENG REVIEW LETTER
10-28-19 PER TWP ENG REVIEW LETTER

JOB NO. 9525.4.18

DATE: 07-10-2019
PM: GMS
ENG: GMS
SURV: AEC
CAD: ABB
\DWG\9525.dwg
VDATUM:U.S.C. & G.S.
SCALE: 1"= 40'

APPLICANT
PITTSFIELD LAND LLC
23370 COMMERCE DRIVE
FARMINGTON HILLS, MI 48335
248-921-3996
ATTN: JEFF KATZEN

LEGEND:

- MANHOLE
- CATCH BASIN
- INLET
- STORM SEWER
- PROPOSED DITCH
- SILT FENCE + LIMITS OF DISTURBANCE
- TREE FENCE
- SED CAGE
- LOW POINT INLET FILTER
- STABILIZE WITHIN 5 DAYS OF GRADING WITH SOIL EROSION CONTROL MULCH BLANKETS AND SEED/OR SOD
- STABILIZE WITHIN 5 DAYS OF GRADING WITH SEED & MULCH/OR SOD
- STONE TRACKING PAD

APPLICANT

PITTSFIELD LAND LLC
23370 COMMERCE DRIVE
FARMINGTON HILLS, MI 48335
248-921-3996
ATTN: JEFF KATZEN

DATE: 07-10-2019
PM: GMS
PE: GMS
SURV: AEC
CAD: AGB
\DWG\9525.dwg
VOLUME: S.C. & S.S.
SCALE: 1" = 40'

STATUS:

REVISIONS
08-27-19 PER TWSP. & WCWRC LETTER
10-02-19 PER TWP ENG REVIEW LETTER
10-18-19 PER TWP ENG REVIEW LETTER
10-28-19 PER TWP ENG REVIEW LETTER

JOB NO. 9525.4.18

ENGINEERS . SURVEYORS
MLP
AND ASSOCIATES, INC.
Michael L. Priest & Associates, Inc.
40655 Koppernick Road, Canton, MI 48187
phone: (734) 459-8560
fax: (734) 459-2585

SOIL EROSION & SEDIMENTATION CONTROL - SOUTH

ARBOR FARMS PHASE 2

CONSTRUCTION PLANS

PART OF THE NORTHWEST 1/4 OF SECTION 26, T.3S., R.6E.,
PITTSFIELD TOWNSHIP, WASHTENAW COUNTY, MICHIGAN

SHEET
09

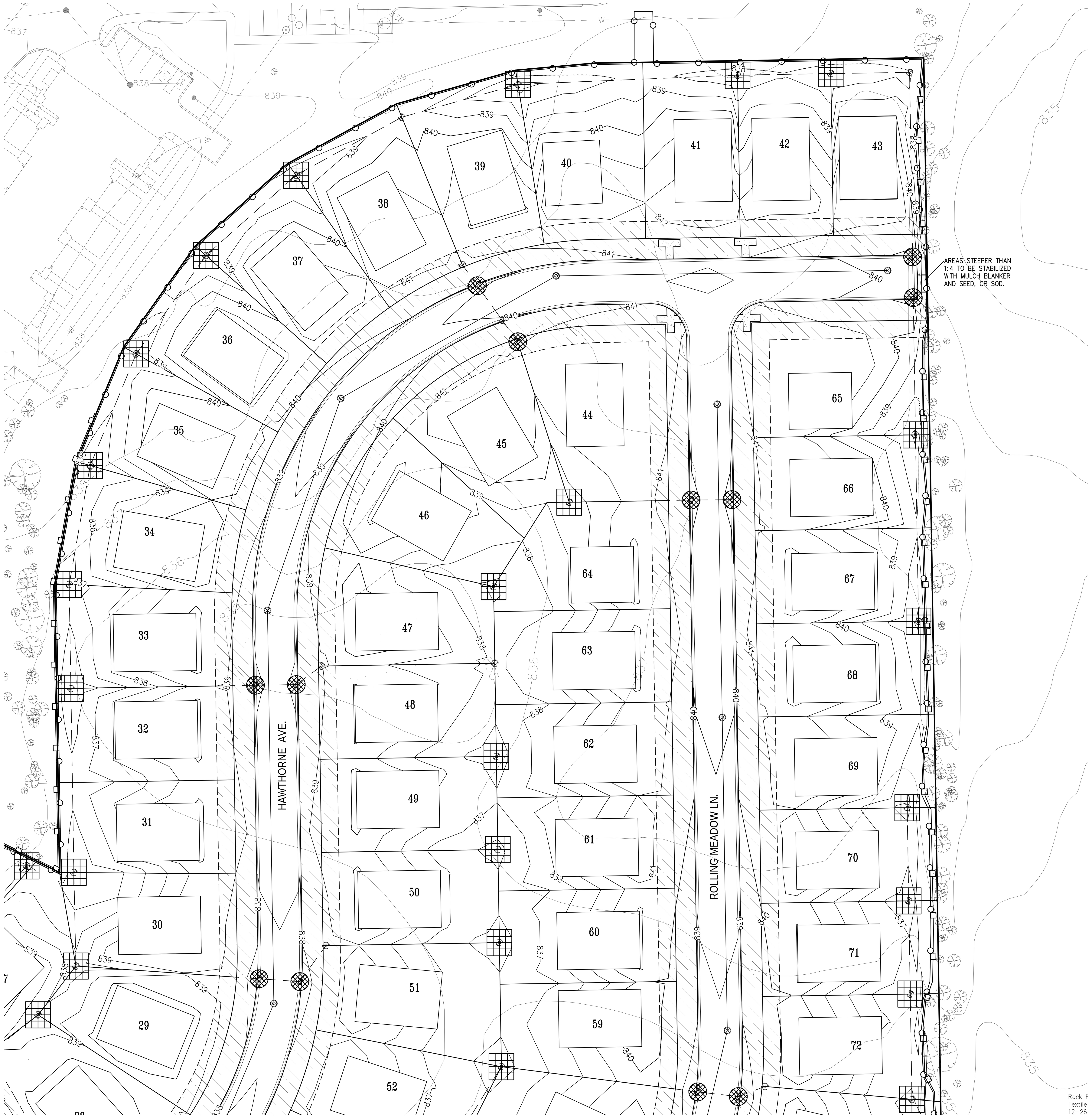

SOIL EROSION CONTROL SEQUENCE OF CONSTRUCTION

START DAY	END DAY	
1	2	1. INSTALL SEDIMENT FENCE AND TREE PROTECTION FENCING PRIOR TO ANY GRADING OPERATION
2	3	2. INSTALL MUD TRACKING PAD
3	8	3. CONSTRUCT DETENTION BASIN MODIFICATIONS
8	9	4. PLACE TOPSOIL, FERTILIZER, SEE AND MULCH OVER DETENTION BASIN REPAIR AREAS
10	30	5. ROUGH GRADE SITE AND STOCKPILE TOPSOIL
31	50	6. INSTALL STORM DRAINAGE SYSTEM, INCLUDING ROAD INLET FILTERS AND DETENTION BASIN STANDPIPE.
51	51	7. MAINTAIN EROSION AND SEDIMENTATION CONTROL MEASURES AS REQUIRED.
52	80	8. INSTALL SANITARY SEWER AND WATER SYSTEMS.
81	95	9. BRING PAVEMENT AREAS TO SUB-BASE GRADE, PLACE SUB-BASE AND BITUMINOUS PAVEMENT
96	100	10. INSTALL FRANCHISE UTILITIES
101	105	11. FINISH GRADE, REDISTRIBUTE TOPSOIL, SEED AND MULCH ALL AREAS.
106	107	12. REMOVE ANY ACCUMULATED SEDIMENT WITHIN THE DETENTION BASIN AND REPLACE CLEAN WASH STONE AROUND STANDPIPE
107	130	13. COMPLETE CONSTRUCTION OF SITE.
130	131	14. ENSURE ALL SOIL IS STABILIZED. REMOVE ALL TEMPORARY SOIL EROSION CONTROL MEASURES.

STREET CLEANING SCHEDULE:

1. ALL ADJACENT STREETS SHALL BE CLEANED WITH SWEEPER ONCE PER WEEK MINIMUM.
2. ALL ADJACENT STREETS SHALL BE SCRAPED AS NEEDED.

SOIL EROSION AND SEDIMENTATION CONTROL NOTES

1. The Contractor shall implement and maintain the soil erosion control measures as shown on the SESC Plans at all times during construction on this project. Any modifications or additions to the soil erosion control measures due to construction or changed conditions, shall be complied with as required or directed by the owner, project engineer, or Pittsfield Charter Township.
2. All soil erosion and sedimentation control work shall conform to the permit requirements of Pittsfield Charter Township and the laws of the State of Michigan.
3. An NPDES Construction Activity Permit is required for all sites greater than five (5) acres.
4. Daily inspections shall be made by the Contractor. Periodic inspections may be made by the Owner/Project Engineer/Township to determine the effectiveness of erosion and sedimentation control measures. Any necessary corrections shall be made without delay by the onsite responsible individual.
5. Erosion and sedimentation from work on the site shall be contained on the site and not be allowed to collect on any off-site areas or in waterways.
6. All mud/dirt tracked onto roads from the site due to construction, shall be promptly removed by the Contractor.
7. Restoration of all disturbed areas, including placement of topsoil, seed, fertilizer and mulch and/or sod shall be completed within five (5) days of the completion of final grade.
8. Construction operations shall be scheduled and performed so that preventative soil erosion control measures are in place prior to excavation in critical areas, and temporary stabilization measures are in place immediately following backfilling operations.
9. Special precautions will be taken in the use of construction equipment to prevent situations that promote erosion.
10. Proper dust control shall be maintained during construction by use of water trucks and/or chloride as required.
11. The Contractor shall be responsible for maintaining all temporary soil erosion control measures and removal of same upon authorized completion of project. Completion of project will not be authorized until all site work, home building, road work, and utility construction is complete and all soils are stabilized.
12. The Contractor shall not grade in existing wetland or conservation areas to be protected. Silt fence shall be installed and maintained adjacent to existing wetland and conservations areas to prevent grading, erosion, and sedimentation into them.
13. Tree protection fencing must remain intact until restoration of the site is complete.
14. A field preconstruction meeting must be held with the SESC Inspector prior to any earth change activity.
15. Silt Sacks will be utilized for all existing and proposed catch basins and beaver dams will be used in addition to silt sacks for curb style catch basins.
16. Stabilization must be started within 5 days of final grade.

SEEDING/SOD NOTES

1. Seed or sod in accordance with project specifications.
2. All areas of disturbed earth that are not to be paved or sodded shall have 4 inches of topsoil, seed, fertilizer and mulch.
3. Immediately after seeding, mulch all seeded areas with unweathered small grain straw (preferably wheat) or hay spread. Spread uniformly at the rate of 1-1/2 to 2 tons or 100 pounds (2 to 3 bales) per 1,000 square foot. This mulch should be anchored with a disc-type mulch-anchoring tool.
4. Any disturbed area not paved, seeded or mulched, sodded or built upon on or after November 15th, is to be mulched in the manner as specified above, in order to provide soil erosion protection during the winter and early spring.
5. All erosion and sedimentation control prevention procedures and structures are to comply with the Standards and Specifications for Soil Erosion and Sedimentation Control of the Washtenaw County Soil Conservation District.

CATCH BASIN/MANHOLE PROTECTION

1. Protect storm sewer catch basins with the following product or approved equal:
   a. Regular Flow Siltsack (for areas of low to moderate precipitation and run-off)
   b. Hi-Flow Siltsack (for areas of moderate to heavy precipitation and run-off)

ROADS

1. During construction, all roads shall be protected from unvegetated areas washing onto road surfaces by placement of silt fence behind curb or a 10-foot wide straw mulch bank behind the curb or other approved method and/or as shown on plans.

SOILS

ON SITE SOIL CONSISTS OF:
70% ST. CLAIR LOAM (StB) @ 2-6% SLOPES &
30% BLOUNT LOAM (BntaaB) @ 2-6% SLOPES

Calculated Soil Loss

The following are calculated soil loss for the construction site.

Site Information:	
County:	Washtenaw
Site:	Arbor Farms
Site ID:	001
Soil:	St. Clair (StB)
Slope:	2%
Slope Length:	300 ft.
Mulch Type:	Straw/hay
Mulch Rate:	1.5 (tons/acre)
Acreage:	16 acre(s)
Calculated Soil Loss:	
Erosion Factors:	R = 100 K = 0.37 LS = 0.43 C = 0.12 P = 1
Tolerable Soil Loss:	T = 3 (tons/acre/year)
Calculated Soil Loss:	A = 1.91 (tons/acre/year)
Potential soil loss (total):	30.55 (tons/year)

40 20 0 40 80 120
SCALE IN FEET 1"=40'

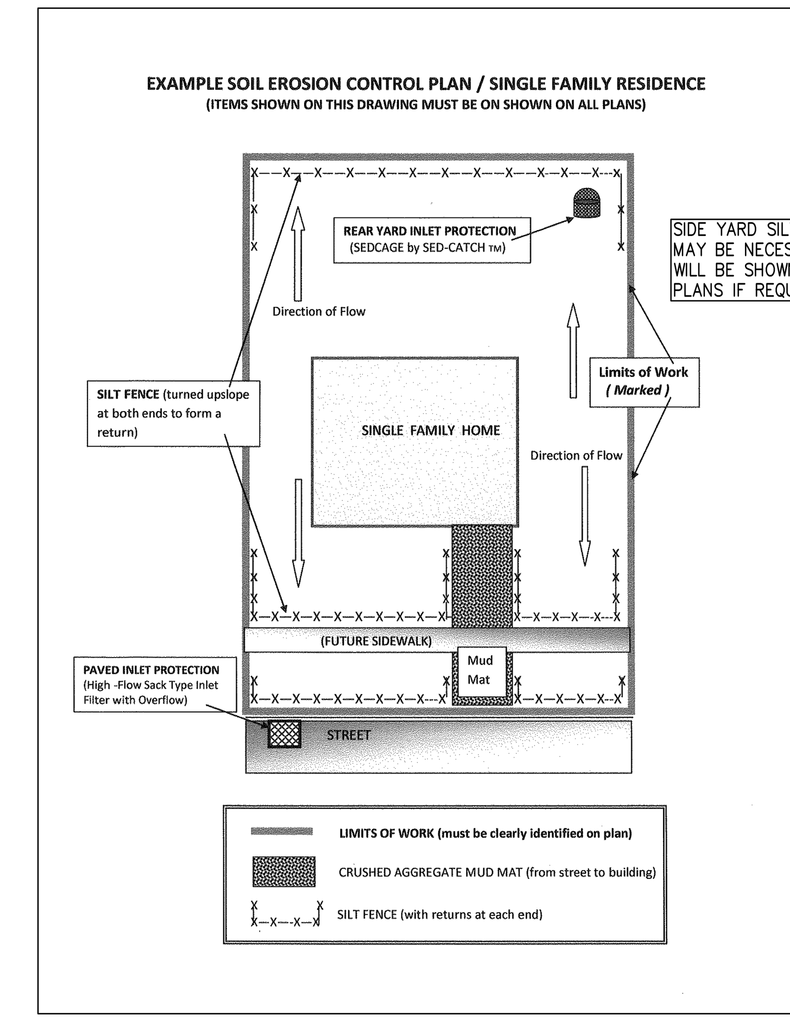

SedCatch© SedCage© - Yard Inlet Protection

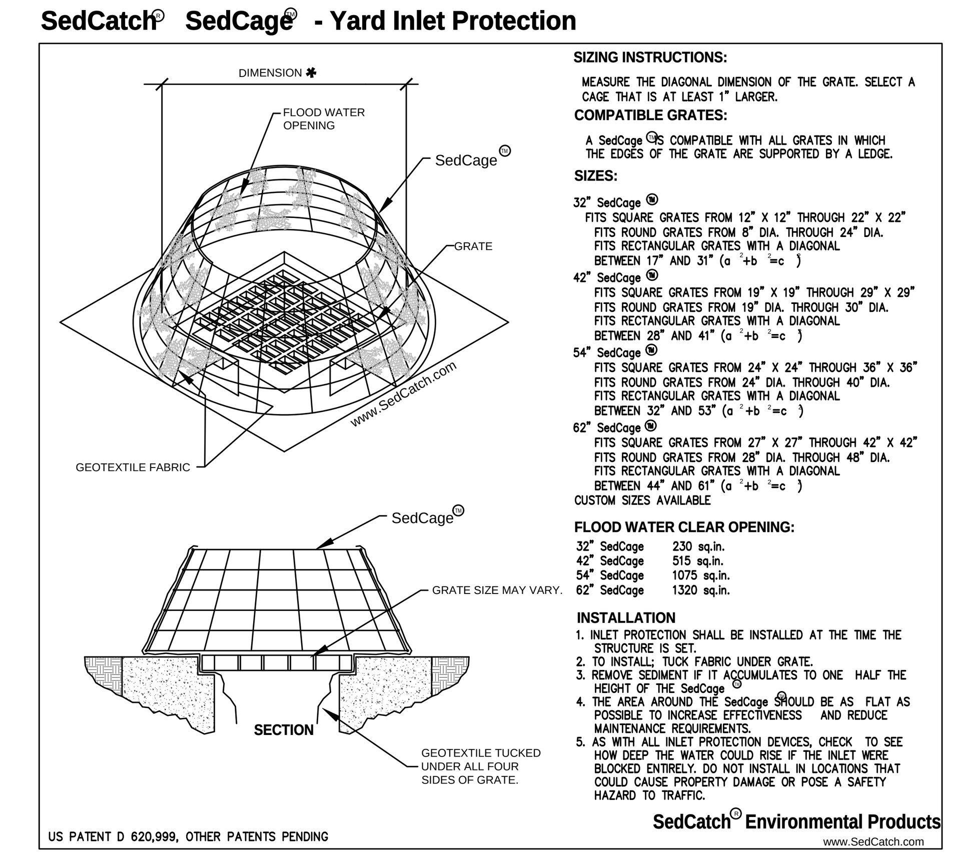

SIZING INSTRUCTIONS:
MEASURE THE DIAGONAL DIMENSION OF THE GRATE. SELECT A CAGE THAT IS AT LEAST 1" LARGER.

COMPATIBLE GRATES:
A SedCage© IS COMPATIBLE WITH ALL GRATES IN WHICH THE EDGES OF THE GRATE ARE SUPPORTED BY A LEDGE.

SIZES:
32" SedCage©
FITS SQUARE GRATES FROM 12" X 12" THROUGH 22" X 22"
FITS ROUND GRATES FROM 8" DIA. THROUGH 24" DIA.
FITS RECTANGULAR GRATES WITH A DIAGONAL BETWEEN 17" AND 31" ($a^2+b^2=c^2$)
42" SedCage©
FITS SQUARE GRATES FROM 19" X 19" THROUGH 29" X 29"
FITS ROUND GRATES FROM 19" DIA. THROUGH 30" DIA.
FITS RECTANGULAR GRATES WITH A DIAGONAL BETWEEN 28" AND 41" ($a^2+b^2=c^2$)
54" SedCage©
FITS SQUARE GRATES FROM 24" X 24" THROUGH 36" X 36"
FITS ROUND GRATES FROM 24" DIA. THROUGH 40" DIA.
FITS RECTANGULAR GRATES WITH A DIAGONAL BETWEEN 32" AND 53" ($a^2+b^2=c^2$)
62" SedCage©
FITS SQUARE GRATES FROM 27" X 27" THROUGH 42" X 42"
FITS ROUND GRATES FROM 28" DIA. THROUGH 48" DIA.
FITS RECTANGULAR GRATES WITH A DIAGONAL BETWEEN 44" AND 61" ($a^2+b^2=c^2$)
CUSTOM SIZES AVAILABLE

FLOOD WATER CLEAR OPENING:

32" SedCage	230 sq.in.
42" SedCage	515 sq.in.
54" SedCage	1075 sq.in.
62" SedCage	1320 sq.in.

INSTALLATION
1. INLET PROTECTION SHALL BE INSTALLED AT THE TIME THE STRUCTURE IS SET.
2. TO INSTALL; TUCK FABRIC UNDER GRATE.
3. REMOVE SEDIMENT IF IT ACCUMULATES TO ONE HALF THE HEIGHT OF THE SedCage©
4. THE AREA AROUND THE SedCage© SHOULD BE AS FLAT AS POSSIBLE TO INCREASE EFFECTIVENESS AND REDUCE MAINTENANCE REQUIREMENTS.
5. AS WITH ALL INLET PROTECTION DEVICES, CHECK TO SEE HOW DEEP THE WATER COULD RISE IF THE INLET WERE BLOCKED ENTIRELY. DO NOT INSTALL IN LOCATIONS THAT COULD CAUSE PROPERTY DAMAGE OR POSE A SAFETY HAZARD TO TRAFFIC.

US PATENT D 620,999, OTHER PATENTS PENDING

SedCatch© Environmental Products
www.SedCatch.com

LEGEND:

- MANHOLE
- CATCH BASIN
- INLET
- STORM SEWER
- PROPOSED DITCH
- SILT FENCE + LIMITS OF DISTURBANCE
- TREE FENCE
- SED CAGE
- LOW POINT INLET FILTER
- STABILIZE WITHIN 5 DAYS OF GRADING WITH SOIL EROSION CONTROL MULCH BLANKETS AND SEED/OR SOD
- STABILIZE WITHIN 5 DAYS OF GRADING WITH SEED & MULCH/OR SOD
- STONE TRACKING PAD

SOIL EROSION & SEDIMENTATION CONTROL - NORTH

APPLICANT
PITTSFIELD LAND LLC
23370 COMMERCE DRIVE
FARMINGTON HILLS, MI 48335
248-921-3996
ATTN: JEFF KATZEN

DATE: 07-10-2019
PM: GMS
ENG: GMS
SURV: AEC
CAD: ADB
\DWG\9525.dwg
VDATUM:U.S.C. & G.S.
SCALE: 1" = 40'

JOB NO. 9525.4.18

STATUS:
REVISIONS
08-27-19 PER TWSP. & WCWRC
10-02-19 PER TWP ENG REVIEW LETTER
10-10-19 PER TWP ENG REVIEW LETTER
10-28-19 PER TWP ENG REVIEW LETTER

ENGINEERS. SURVEYORS
MLP
AND ASSOCIATES, INC.
Michael L. Priest & Associates, Inc.
40655 Koppernick Road, Canton, MI 48187
phone: (734) 459-8560
fax: (734) 459-2585

ARBOR FARMS PHASE 2
CONSTRUCTION PLANS
PART OF THE NORTHWEST 1/4 OF SECTION 26, T.3S., R.6E., PITTSFIELD TOWNSHIP, WASHTENAW COUNTY, MICHIGAN

GRADE PLAN - SOUTH

SHEET 11

ARBOR FARMS PHASE 2

CONSTRUCTION PLANS

PART OF THE NORTHWEST 1/4 OF SECTION 26, T.3S., R.6E.,
PITTSFIELD TOWNSHIP, WASHTENAW COUNTY, MICHIGAN

ENGINEERS, SURVEYORS
MLP AND ASSOCIATES, INC.
Michael L. Priest & Associates, Inc.
40655 Koppernick Road, Canton, MI 48187
phone: (734) 459-8560
fax: (734) 459-2585

STATUS:

REVISIONS
08-27-19 PER TWSP. & WCWRC
10-02-19 PER TWP ENG REVIEW LETTER
10-10-19 PER TWP ENG REVIEW LETTER
10-28-19 PER TWP ENG REVIEW LETTER

JOB NO. 9525.4.18

DATE: 07-10-2019
PM: GMS
ENG: GMS
SURV: AEC
CAD: ABB
\DWG\9525.dwg
VDATUM:U.S.C. & G.S.
SCALE: 1" = 40'

APPLICANT
PITTSFIELD LAND LLC
23370 COMMERCE DRIVE
FARMINGTON HILLS, MI 48335
248-921-3996
ATTN: JEFF KATZEN

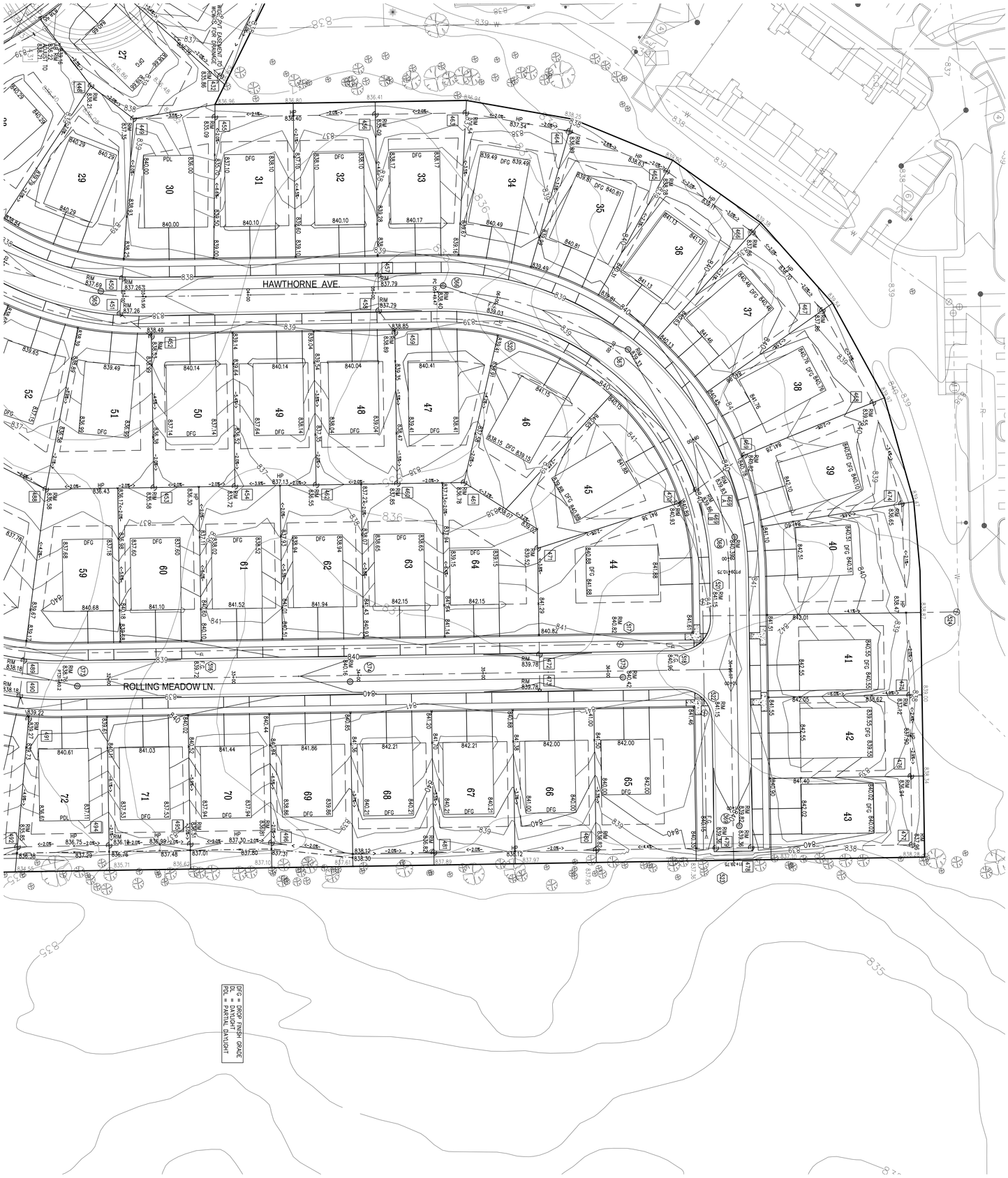

LEGEND:

	EXISTING	PROPOSED
SANITARY		
STORM		
WATER MAIN		
GAS LINE		
OVERHEAD LINE		
PUBLIC UTILITIES		
DITCH/SWALE		
RIGHT-OF-WAY		
EASEMENT		

SCALE IN FEET: 40 20 0 40 80 120 40

GRADE PLAN - NORTH

SHEET 12

ARBOR FARMS PHASE 2

CONSTRUCTION PLANS

PART OF THE NORTHWEST 1/4 OF SECTION 26, T.3S., R.6E.,
PITTSFIELD TOWNSHIP, WASHTENAW COUNTY, MICHIGAN

ENGINEERS, SURVEYORS
MLP AND ASSOCIATES, INC.
Michael L. Priest & Associates, Inc.
40655 Koppernick Road, Canton, MI 48187
phone: (734) 459-8560
fax: (734) 459-2585

STATUS:

REVISIONS
08-27-19 PER TWSP. & WCWRC
10-02-19 PER TWP ENG REVIEW LETTER
10-10-19 PER TWP ENG REVIEW LETTER
10-28-19 PER TWP ENG REVIEW LETTER

JOB NO. 9525.4.18

DATE: 07-10-2019
PM: GMS
ENG: GMS
SURV: AEC
CAD: ABB
\DWG\9525.dwg
VDATUM:U.S.C. & G.S.
SCALE: 1" = 40'

APPLICANT
PITTSFIELD LAND LLC
23370 COMMERCE DRIVE
FARMINGTON HILLS, MI 48335
248-921-3996
ATTN: JEFF KATZEN

NOTE:
SUMP DRAINS FOR LOTS 73 TO 78, 80 AND 83 DRAIN TO WETLAND

COMPACTION OF TRENCHES IS REQUIRED IN ROADWAY CORRIDORS AND SIDEWALKS, AND PARKING LOTS (CLASS II SAND AT 95% COMPACTION). ROADWAY CORRIDORS CONSTITUTE FRONT OF HOUSE TO FRONT OF HOUSE IN RESIDENTIAL DEVELOPMENTS.

40 20 0 40 80 120
SCALE IN FEET 1"=40'

SANITARY BASIS OF DESIGN

59 lots x 3.5 cap/lot = 206.5 cap

{(100 gal) * (day) * (hr) * (min) * (1 cf)}

Qavg = 206.5 cap * ---------- =
{(cap-day)*(24 hrs)*(60 min)*(60 sec)*(7.48 gal)}

Qavg = 0.032 cfs
14 GPM

COMPUTE PEAKING FACTOR C:
C = (18+(0.2065)^0.5) / (4+0.2065)^0.5) = 4.14

Qmax = Qavg * C (peaking factor)
Qmax = 0.03 cfs * 4.14 =

Qmax = 0.132 cfs
59 GPM

USE 10 inch diameter pipe

SLOPE, s = 0.0028 ft/ft
n = 0.013

Qprovided = V * A
Qprovided = {(1.486/n) * R^(2/3) * s^(1/2)} * {pi * (D^2)/4}

Qprovided = 1.16 cfs
520 GPM
@ V = 2.13 fps

SANITARY STRUCTURE SCHEDULE

STR. NO.	F.G ELEV.	STR. DIA. (FT)	EJIW CASTING/ GRATE OR EQUAL	PIPE DIA. (IN)	DIR.	I.E.	STRUCTURE DEPTH (FT)
EX.361	839.53	4	EJIW 1040 / AGS	12	NW	827.41	11.70
				10	SE	827.51	
362	838.07	4	EJIW 1040 / AGS	10	NW	827.67	9.98
				10	SE	827.77	
363	837.73	4	EJIW 1040 / AGS	10	NW	828.21	9.10
				10	NE	828.31	
				10	SE	828.31	
364	838.11	4	EJIW 1040 / AGS	10	SW	828.7	8.99
				10	NE	828.8	
365	837.69	4	EJIW 1040 / AGS	10	SW	829.22	8.05
				10	N	829.32	
366	838.40	4	EJIW 1040 / AGS	10	S	830.08	7.90
				10	NE	830.18	
367	839.33	4	EJIW 1040 / AGS	10	SW	830.62	8.29
				10	NE	830.72	
368	840.39	4	EJIW 1040 / AGS	10	SW	831.21	8.76
				10	E	831.31	
369	839.82	4	EJIW 1040 / AGS	10	W	831.95	7.45
370	837.99	4	EJIW 1040 / AGS	10	NW	828.78	8.79
				10	E	828.88	
371	837.16	4	EJIW 1040 / AGS	10	W	829.35	7.39
				10	NE	829.45	
372	838.93	4	EJIW 1040 / AGS	10	SW	830.09	8.42
				10	N	830.19	
373	838.76	4	EJIW 1040 / AGS	10	S	830.59	7.75
				10	N	830.69	
374	840.16	4	EJIW 1040 / AGS	10	S	831.31	8.43
				10	N	831.41	
375	840.42	4	EJIW 1040 / AGS	10	S	832.02	7.98

WATER STRUCTURE SCHEDULE

STR. NO.	F.G ELEV.	STR. DIA. (FT)	EJIW CASTING/ GRATE OR EQUAL	PIPE DIA. (IN)	I.E.	STRUCTURE DEPTH (FT)
524	838.97		EJ 5BR250	8	833.47	7.17
523	840.15		EJ 5BR250	12	834.65	5.50
522	841.15	6	EJIW 1040Z / A	12	835.65	7.50
521	841.15	6	EJIW 1040Z / A	12	835.65	7.50
520	839.03		EJ 5BR250	12	833.53	5.50
519	838.26	6	EJIW 1040Z / A	12	832.76	7.50
518	840.96		EJ 5BR250	8	835.46	5.50
517	840.82	6	EJIW 7045	8	835.32	7.17
516	839.72		EJ 5BR250	8	834.22	5.50
515	837.49		EJ 5BR250	8	831.99	5.50
514	838.81	6	EJIW 1040Z / A	8	833.31	7.17
513	837.65	6	EJIW 1040Z / A	12	832.15	5.50
512	837.39		EJ 5BR250	12	831.78	7.50

LEGEND:

	EXISTING	PROPOSED
SANITARY		
STORM		
WATER MAIN		
GAS LINE	GAS	GAS
OVERHEAD LINE	OHW	OHW
PUBLIC UTILITES		
DITCH/SWALE		
RIGHT-OF-WAY		
EASEMENT		
SETBACK		
WALKS TO BE INSTALLED BY DEVELOPER		

GENERAL DEVELOPMENT PLAN - SOUTH

ARBOR FARMS PHASE 2
CONSTRUCTION PLANS
PART OF THE NORTHWEST 1/4 OF SECTION 26, T.3S., R.6E., PITTSFIELD TOWNSHIP, WASHTENAW COUNTY, MICHIGAN

SHEET
13

ENGINEERS, SURVEYORS
MLP
AND ASSOCIATES, INC.
Michael L. Priest & Associates, Inc.
40655 Koppernick Road, Canton, MI 48187
phone: (734) 459-8560
fax: (734) 459-2585

STATUS:

REVISIONS
10-02-19 PER TWSP. & WCWRC LETTER
10-02-19 PER TWP. ENG REVIEW LETTER
10-28-19 PER WCWRC LETTER
10-28-19 PER TWP. ENG REVIEW LETTER

JOB NO. 9525.4.18

DATE: 07-10-2019
PM: GMS
PIC: GMS
SURV: AEC
CAD: AGB
\DWG\9525.dwg
XDATUM:S.C. & S.S.
SCALE: 1" = 40'

APPLICANT
PITTSFIELD LAND LLC
23370 COMMERCE DRIVE
FARMINGTON HILLS, MI 48335
248-921-3996
ATTN: JEFF KATZEN

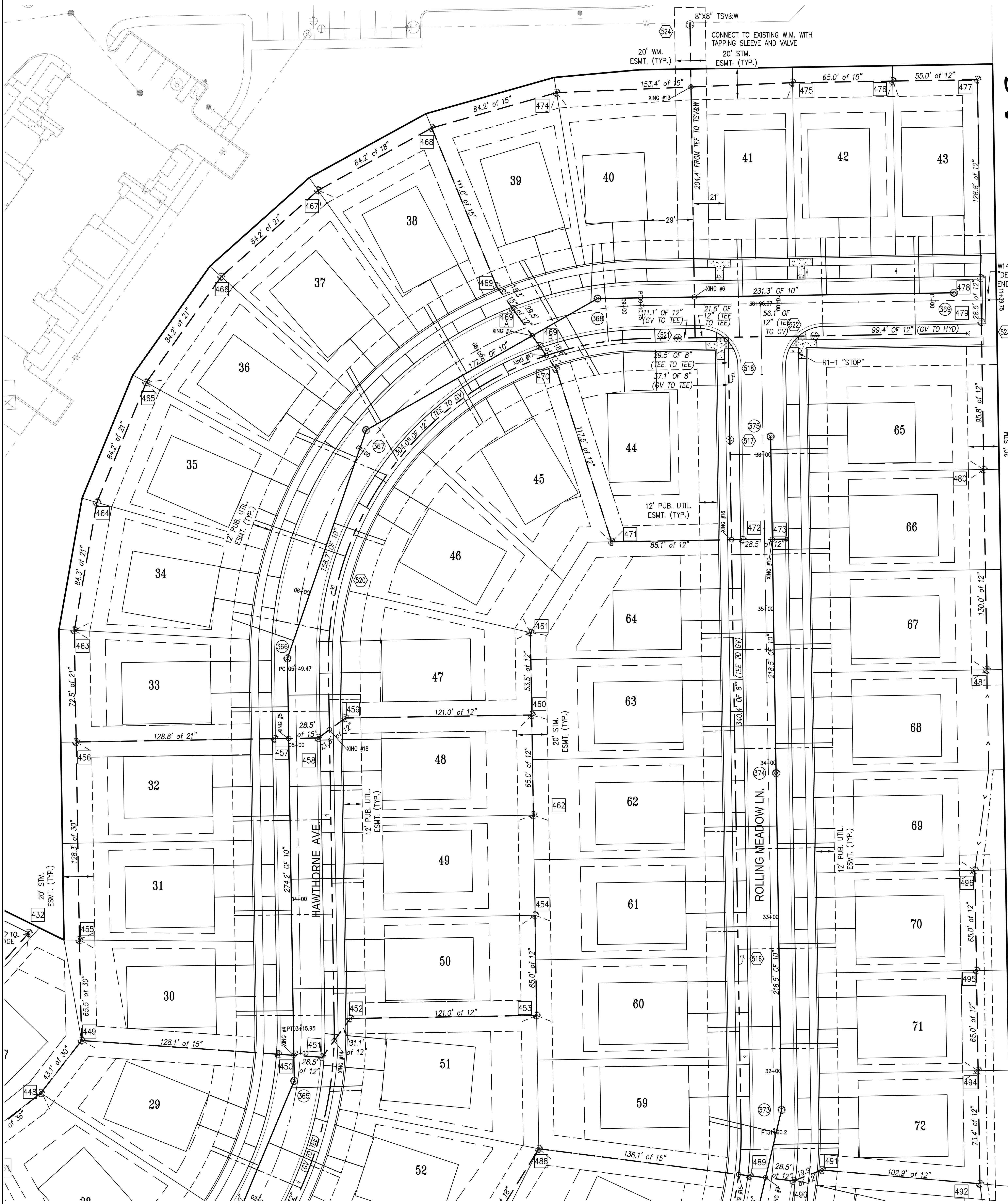

COMPACTION OF TRENCHES IS REQUIRED IN ROADWAY CORRIDORS AND SIDEWALKS, AND PARKING LOTS (CLASS II SAND AT 95% COMPACTION). ROADWAY CORRIDORS CONSTITUTE FRONT OF HOUSE TO FRONT OF HOUSE IN RESIDENTIAL DEVELOPMENTS.

SANITARY SEWER & LEADS SCHEDULE

Lot Number	High FG	MH #	Size	Rim Grade	San Sta	San Slope	MH Jump	Invert at Sanitary Main	Lead Invert at Main	Riser Height	Length Lead (ease)	Invert at End of Lead (ease)	Length E/Lead to Front Setback	Invert at Front Setback	Basement Floor	Notes	Length E/Lead to House	Invert at Front Setback
		EX 358	12	841.71	0+00.00	0.27%		827.01										
L25 (85)	842.14				0+94.00	0.27%				3.0	78.0	831.91	12.4	832.16	835.31	Existing	12.4	832.16
83 (143)	840.77				1+31.00	0.27%				1.0	18.0	828.92	12.8	829.18	833.94	Existing	12.8	829.18
26 (86)	841.74				1+47.00	0.27%				3.0	69.0	831.82	8.5	831.99	834.91	Existing	8.5	831.99
		EX 361	12	839.53	1+46.60	0.27%		827.41										
		EX 361	10		0+00.00	0.28%	0.10	827.51										
L27	840.66				0+51.10	0.28%		827.65	827.82	3.0	48.7	831.73	3.0	831.79	833.83	Type 2	3.0	831.79
		362	10	838.07	0+56.10	0.28%		827.67										
		362	10		0+00.00	0.28%	0.10	827.77										
L82	839.84				0+82.20	0.28%		828.00	828.16		38.5	828.93	13.0	829.19	833.01		13.0	829.19
L81	839.28				1+24.80	0.28%		828.12	828.28		37.3	828.66	13.0	828.92	832.45	*****	13.0	828.92
		363	10	837.73	1+59.30	0.28%		828.21										
		363	10		0+00.00	0.28%	0.10	828.31										
L28	840.24				0+95.90	0.28%		828.58	828.75		41.3	829.57	13.2	829.84	833.41		13.2	829.84
		364	10	838.11	1+38.50	0.28%		828.70										
		364	10		0+00.00	0.28%	0.10	828.80										
L53	839.94				0+38.10	0.28%		828.91	829.07		46.3	830.00	13.3	830.27	833.11		13.3	830.27
L29	840.24				0+88.80	0.28%		829.05	829.22		32.5	829.87	13.0	830.13	833.41		13.0	830.13
L52	839.65				1+04.80	0.28%		829.09	829.26		51.1	830.28	13.1	830.55	832.82		13.1	830.55
L51	839.43				1+43.30	0.28%		829.20	829.37		46.1	830.29	13.1	830.55	832.60		13.1	830.55
		365	10	837.69	1+48.30	0.28%		829.22										
		365	10		0+00.00	0.28%	0.10	829.32										
L30	839.94				0+45.50	0.28%		829.44	829.61		37.0	830.35	13.0	830.61	833.11		13.0	830.61
L50	840.08				0+59.70	0.28%		829.48	829.65		47.0	830.59	13.0	830.85	833.25		13.0	830.85
L31	840.05				1+10.80	0.28%		829.63	829.79		37.0	830.53	13.0	830.79	833.22		13.0	830.79
L49	840.08				1+30.90	0.28%		829.68	829.85		47.0	830.79	13.0	831.05	833.25		13.0	831.05
L32	840.05				1+72.10	0.28%		829.80	829.96		37.0	830.70	13.0	830.96	833.22		13.0	830.96
L48	839.98				1+91.10	0.28%		829.85	830.02		47.0	830.49	13.0	830.75	833.15	****	13.0	830.75
L33	840.11				2+42.70	0.28%		830.00	830.16		37.0	830.90	13.0	831.16	833.28		13.0	831.16
L47	840.35				2+50.30	0.28%		830.02	830.18		47.0	830.65	13.0	830.91	833.52	****	13.0	830.91
		366	10	838.40	2+74.20	0.28%		830.08										
		366	10		0+00.00	0.28%	0.10	830.18										
L34	840.43				0+12.20	0.28%		830.22	830.38		42.0	831.22	13.3	831.49	833.60		13.3	831.49
L35	840.75				0+77.90	0.28%		830.40	830.57		49.5	831.56	13.0	831.82	833.92		13.0	831.82
L46	841.09				0+92.90	0.28%		830.44	830.61		35.3	831.32	13.0	831.58	834.26		13.0	831.58
L36	841.08				1+37.90	0.28%		830.57	830.74		41.7	831.57	13.2	831.83	834.25		13.2	831.83
		367	10	839.33	1+56.70	0.28%		830.62										
		367	10		0+00.00	0.28%	0.10	830.72										
L37	841.40				0+11.00	0.28%		830.75	830.92		40.9	831.74	13.5	832.01	834.57		13.5	832.01
L45	841.83				0+68.30	0.28%		830.91	831.08		33.4	831.75	13.1	832.01	835.00		13.1	832.01
L38	841.72				0+75.10	0.28%		830.93	831.10		51.3	832.13	13.0	832.39	834.89		13.0	832.39
L39	842.05				1+43.50	0.28%		831.12	831.29		45.4	832.20	13.3	832.47	835.22		13.3	832.47
L44	841.83				1+49.40	0.28%		831.14	831.31		43.4	832.18	13.9	832.45	835.00		13.9	832.45
L40	842.46				1+67.80	0.28%		831.19	831.36		37.5	832.11	13.2	832.37	835.63		13.2	832.37
		368	10	840.39	1+72.80	0.28%		831.21										
		368	10		0+00.00	0.28%	0.10	831.31										
L41	842.54				0+94.40	0.28%		831.57	831.74		37.0	832.48	13.0	832.74	835.71		13.0	832.74
L42	842.54				1+48.80	0.28%		831.72	831.89		37.0	832.63	13.0	832.89	835.71		13.0	832.89
L43	842.02				2+08.90	0.28%		831.89	832.06		37.0	832.80	13.0	833.06	835.19		13.0	833.06
		369	10	839.82	2+31.30	0.28%		831.95										
		363	10		0+00.00	0.28%	0.10	828.31										
L54	839.34				1+23.00	0.28%		828.66	828.82		37.6	829.58	13.4	829.84	832.51		13.4	829.84
L80	839.93				1+40.10	0.28%		828.71	828.87		43.5	829.31	13.0	829.57	833.10	*****	13.0	829.57
		370	10	837.99	1+66.90	0.28%		828.78										
		370	10		0+00.00	0.28%	0.10	828.88										
L79	839.67				0+05.00	0.28%		828.89	829.06		38.7	829.45	13.5	829.72	832.84	*****	13.5	829.72
L78	839.41				0+77.80	0.28%		829.10	829.26		50.4	829.77	13.0	830.03	832.58	*****	13.0	830.03
L55	839.35				1+08.90	0.28%		829.19	829.35		35.2	830.06	13.1	830.32	832.52		13.1	830.32
		371	10	837.16	1+67.20	0.28%		829.35										
		371	10		0+00.00	0.28%	0.10	829.45										
L77	839.64				0+69.80	0.28%		829.64	829.81		50.2	830.31	13.1	830.57	832.81	*****	13.1	830.57
L56	839.78				0+75.30	0.28%		829.66	829.83		33.7	830.50	13.0	830.76	832.95		13.0	830.76
L76	840.28				1+36.40	0.28%		829.83	830.00		47.8	830.95	13.0	831.21	833.45		13.0	831.21
L57	840.58				1+48.00	0.28%		829.86	830.03		37.1	830.77	13.0	831.03	833.75		13.0	831.03
L75	840.66				2+01.60	0.28%		830.01	830.18		42.6	831.03	13.1	831.29	833.83		13.1	831.29
		372	10	838.93	2+29.70	0.28%		830.09										
		372	10		0+00.00	0.28%	0.10	830.19										
L74	840.66				0+07.80	0.28%		830.21	830.38		38.3	831.15	13.3	831.41	833.83		13.3	831.41
L58	840.58				0+34.00	0.28%		830.29	830.45		41.2	831.28	13.3	831.54	833.75		13.3	831.54
L73	840.39				0+71.80	0.28%		830.39	830.56		47.2	831.03	13.0	831.29	833.56	*****	13.0	831.29
L72	840.61				1+20.90	0.28%		830.53	830.70		42.5	831.55	13.1	831.81	833.78		13.1	831.81
L59	840.68				1+28.80	0.28%		830.55	830.72		44.7	831.61	13.4	831.88	833.85		13.4	831.88
		373	10	838.76	1+43.80	0.28%		830.59										
		373	10		0+00.00	0.28%	0.10	830.69										
L71	841.03				0+42.70	0.28%		830.81	830.98		37.0	831.72	13.0	831.98	834.20		13.0	831.98
L60	841.10				0+54.20	0.28%		830.85	831.01		47.0	831.95	13.0	832.21	834.27		13.0	832.21
L70	841.44				1+07.70	0.28%		831.00	831.16		37.0	831.90	13.0	832.16	834.61		13.0	832.16
L61	841.52				1+19.20	0.28%		831.03	831.19		47.0	832.13	13.0	832.39	834.69		13.0	832.39
L69	841.86				1+72.70	0.28%		831.18	831.34		37.0	832.08	13.0	832.34	835.03		13.0	832.34
L62	841.94				1+84.20	0.28%		831.21	831.38		47.0	832.32	13.0	832.58	835.11		13.0	832.58
		374	10	840.16	2+18.50	0.28%		831.31										
		374	10		0+00.00	0.28%	0.10	831.41										
L68	842.21				0+19.20	0.28%		831.46	831.63		37.0	832.37	13.0	832.63	835.38		13.0	832.63
L63	842.15				0+31.00	0.28%		831.49	831.66		47.0	832.60	13.0	832.86	835.32		13.0	832.86
L67	842.21				0+83.40	0.28%		831.64	831.81		37.0	832.55	13.0	832.81	835.38		13.0	832.81
L64	842.15				0+91.40	0.28%		831.66	831.83		47.0	832.77	13.0	833.03	835.32		13.0	833.03
L66	841.96				1+45.20	0.28%		831.81	831.98		37.0	832.72	13.0	832.98	835.13		13.0	832.98
L65	841.96				2+10.20	0.28%		831.99	832.16		37.0	832.90	13.0	833.16	835.13		13.0	833.16

UTILITY CROSSINGS

#	UTILITY X-INGS		ELEV	PROP. GRND ELEV	X-ING LOCATION
1	STORM	BOTTOM/PIPE	829.94	836.8	Lot 81
	SAN	TOP/PIPE	828.94		
	CLEARANCE		1.00		
2	WM	BOTTOM/PIPE	831.19	837.6	LOT 28/54
	SAN	TOP/PIPE	829.26		
	CLEARANCE		1.93		
3	STORM	BOTTOM/PIPE	829.82	837.6	LOT 28/54
	SAN	TOP/PIPE	829.32		
	CLEARANCE		0.50		
4	STORM	BOTTOM/PIPE	831.23	837.6	LOT 29/30
	SAN	TOP/PIPE	830.23		
	CLEARANCE		1.00		
5	STORM	BOTTOM/PIPE	831.81	838.1	LOT 32/33
	SAN	TOP/PIPE	830.81		
	CLEARANCE		1.00		
6	WM	BOTTOM/PIPE	834.20	840.8	LOT 40/41
	SAN	TOP/PIPE	832.35		
	CLEARANCE		1.85		
7	STORM	BOTTOM/PIPE	833.64	840.1	LOT 44/45
	SAN	TOP/PIPE	831.94		
	CLEARANCE		1.70		
8	STORM	BOTTOM/PIPE	832.03	837.1	LOT 55/56
	SAN	TOP/PIPE	830.39		
	CLEARANCE		1.63		
9	STORM	BOTTOM/PIPE	831.97	838.5	LOT 58/59
	SAN	TOP/PIPE	831.33		
	CLEARANCE		0.63		
10	STORM	BOTTOM/PIPE	835.03	840.1	LOT 66
	SAN	TOP/PIPE	832.70		
	CLEARANCE		2.33		
11	WM	DEFLECT BTM/PIPE	832.04	837.2	LOT 28
	STORM	TOP/PIPE	830.54		
	CLEARANCE		1.50		
12	WM	BTM/PIPE	832.27	838.1	LOT 53
	STORM	TOP/PIPE	831.27		
	CLEARANCE		1.00		
13	WM	BTM/PIPE	833.70	838.5	LOT 40/41
	STORM	TOP/PIPE	832.20		
	CLEARANCE		1.50		
14	STORM	BTM/PIPE	831.37	838.1	LOT 51
	WM	DEFLECT TOP/PIPE	829.87		
	CLEARANCE		1.50		
15	STORM	BOTTOM/PIPE	831.68	838.9	LOT 58/59
	WM	DEFLECT TOP/PIPE	830.12		
	CLEARANCE		1.56		
16	STORM	BOTTOM/PIPE	834.82	840.5	LOT 64
	WM	DEFLECT TOP/PIPE	833.32		
	CLEARANCE		1.50		
17	STORM	BTM/PIPE	833.71	840.6	LOT 44/45
	WM	DEFLECT TOP/PIPE	832.21		
	CLEARANCE		1.50		
18	STORM	BOTTOM/PIPE	832.13	838.5	LOT 48
	WM	DEFLECT TOP/PIPE	830.63		
	CLEARANCE		1.50		
19	WM	BOTTOM/PIPE	833.90	840.5	LOT 25
	STORM	TOP/PIPE	831.06		
	CLEARANCE		2.84		

SANITARY LEAD CROSSINGS

#	UTILITY X-INGS		ELEV	PROP. GRND ELEV
L25 (85)	WM	BTM/PIPE	834.00	840.6
	SAN LD	TOP/PIPE	831.55	
	CLEARANCE		2.45	
L26 (86)	WM	BOTTOM/PIPE	833.30	839.9
	SAN LD	TOP/PIPE	831.75	
	CLEARANCE		1.55	
L27	WM	DEFLECT BTM/PIPE	832.00	838.6
	SAN LD	TOP/PIPE	828.70	
	CLEARANCE		3.30	
L27	SAN LD	BOTTOM/PIPE	831.39	838.6
	STORM	TOP/PIPE	830.78	
	CLEARANCE		0.61	
L44	WM	BOTTOM/PIPE	834.10	840.7
	SAN LD	TOP/PIPE	832.26	
	CLEARANCE		1.84	
L45	WM	BOTTOM/PIPE	833.60	840.2
	SAN LD	TOP/PIPE	831.86	
	CLEARANCE		1.74	
L46	WM	BOTTOM/PIPE	832.80	839.4
	SAN LD	TOP/PIPE	831.13	
	CLEARANCE		1.67	
L47	WM	DEFLECT BTM/PIPE	832.47	838.7
	SAN LD	TOP/PIPE	830.97	
	CLEARANCE		1.50	
L48	WM	BTM/PIPE	832.30	838.6
	SAN LD	TOP/PIPE	830.80	
	CLEARANCE		1.50	
L49	WM	BTM/PIPE	832.40	838.9
	SAN LD	TOP/PIPE	830.90	
	CLEARANCE		1.50	
L50	WM	DEFLECT BTM/PIPE	832.20	838.4
	SAN LD	TOP/PIPE	830.70	
	CLEARANCE		1.50	
L51	WM	DEFLECT BTM/PIPE	831.89	838.0
	SAN LD	TOP/PIPE	830.39	
	CLEARANCE		1.50	
L52	WM	DEFLECT BTM/PIPE	831.89	838.3
	SAN LD	TOP/PIPE	830.39	
	CLEARANCE		1.50	
L53	WM	BOTTOM/PIPE	832.00	838.6
	SAN LD	TOP/PIPE	830.10	
	CLEARANCE		1.90	
L54	WM	BOTTOM/PIPE	832.35	838.6
	SAN LD	TOP/PIPE	829.68	
	CLEARANCE		2.67	
L55	WM	BOTTOM/PIPE	831.67	837.9
	SAN LD	TOP/PIPE	830.16	
	CLEARANCE		1.50	
L56	WM	DEFLECT BTM/PIPE	832.11	838.0
	SAN LD	TOP/PIPE	830.61	
	CLEARANCE		1.50	
L57	WM	BOTTOM/PIPE	832.45	838.7
	SAN LD	TOP/PIPE	830.88	
	CLEARANCE		1.56	
L58	WM	BOTTOM/PIPE	832.95	839.2
	SAN LD	TOP/PIPE	831.38	
	CLEARANCE		1.57	
L59	WM	BOTTOM/PIPE	833.21	839.1
	SAN LD	TOP/PIPE	831.71	
	CLEARANCE		1.50	
L60	WM	DEFLECT BTM/PIPE	833.57	839.5
	SAN LD	TOP/PIPE	832.06	
	CLEARANCE		1.50	
L61	WM	DEFLECT BTM/PIPE	833.75	839.9
	SAN LD	TOP/PIPE	832.24	
	CLEARANCE		1.50	
L62	WM	BOTTOM/PIPE	834.05	840.3
	SAN LD	TOP/PIPE	832.43	
	CLEARANCE		1.62	
L63	WM	BOTTOM/PIPE	834.55	840.8
	SAN LD	TOP/PIPE	832.71	
	CLEARANCE		1.84	
L64	WM	BOTTOM/PIPE	834.55	840.8
	SAN LD	TOP/PIPE	832.88	
	CLEARANCE		1.67	
L77	STORM	BOTTOM/PIPE	831.76	840.8
	SAN LD	TOP/PIPE	830.66	
	CLEARANCE		1.10	
L78	STORM	BOTTOM/PIPE	830.88	840.8
	SAN LD	TOP/PIPE	830.15	
	CLEARANCE		0.73	
L79	STORM	BOTTOM/PIPE	830.72	840.8
	SAN LD	TOP/PIPE	829.79	
	CLEARANCE		0.93	
L80	STORM	BOTTOM/PIPE	830.63	840.8
	SAN LD	TOP/PIPE	829.65	
	CLEARANCE		0.99	

40 20 0 40 80 120
SCALE IN FEET 1"=40'

LEGEND:

	EXISTING	PROPOSED
SANITARY		
STORM		
WATER MAIN		
GAS LINE	GAS	GAS
OVERHEAD LINE	OHW	OHW
PUBLIC UTILITES		
DITCH/SWALE	>	>
RIGHT-OF-WAY		
EASEMENT		
SETBACK		
WALKS TO BE INSTALLED BY DEVELOPER		

GENERAL DEVELOPMENT PLAN - NORTH & CROSSING TABLE

ARBOR FARMS PHASE 2

CONSTRUCTION PLANS

PART OF THE NORTHWEST 1/4 OF SECTION 26, T.3S., R.6E., PITTSFIELD TOWNSHIP, WASHTENAW COUNTY, MICHIGAN

ENGINEERS . SURVEYORS
MLP AND ASSOCIATES, INC.
Michael L. Priest & Associates, Inc.
40655 Koppernick Road, Canton, MI 48187
phone: (734) 459-8560
fax: (734) 459-2585

STATUS:
REVISIONS
08-27-19 PER TWSP. & WCWRC
10-02-19 PER TWP ENG REVIEW LETTER
10-10-19 PER TWP ENG REVIEW LETTER
10-28-19 PER TWP ENG REVIEW LETTER

JOB NO. 9525.4.18

DATE: 07-10-2019
PM: GMS
ENG: GMS
SURV: AEC
CAD: ADB
\DWG\9525.dwg
VDATUM:U.S.C. & G.S.
SCALE: 1"= 40'

APPLICANT

PITTSFIELD LAND LLC
23370 COMMERCE DRIVE
FARMINGTON HILLS, MI 48335
248-921-3996
ATTN: JEFF KATZEN

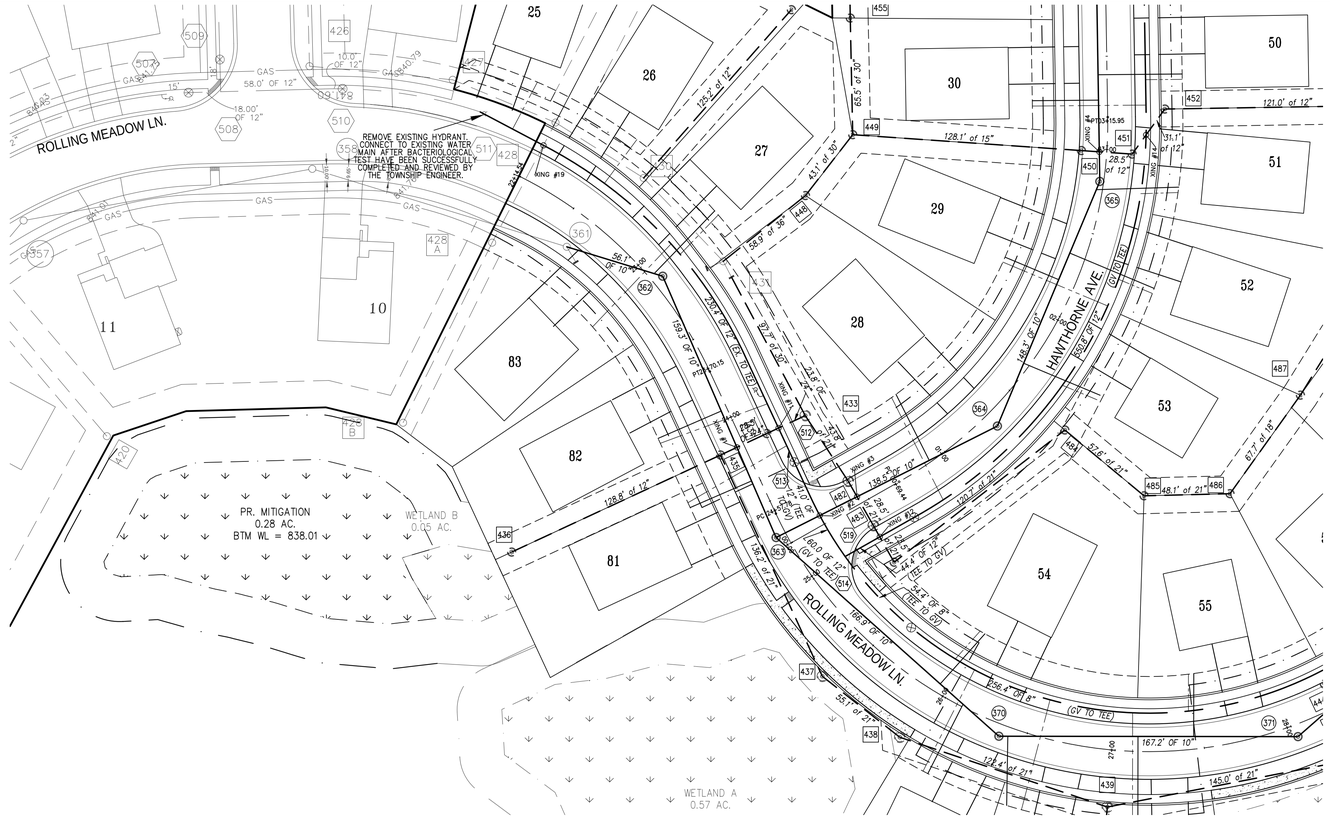

40 20 0 40 80 120
SCALE IN FEET 1"=40'

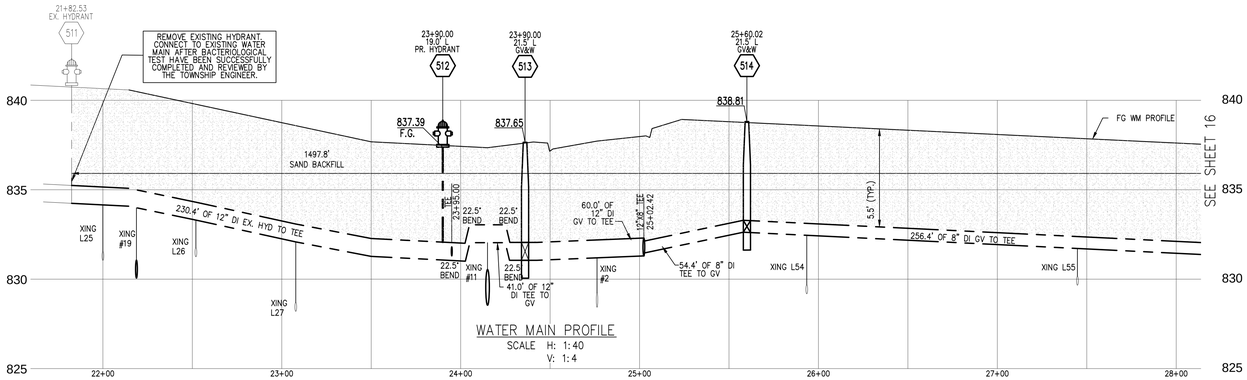

CROSSING TABLE LOCATED ON SHEET 14

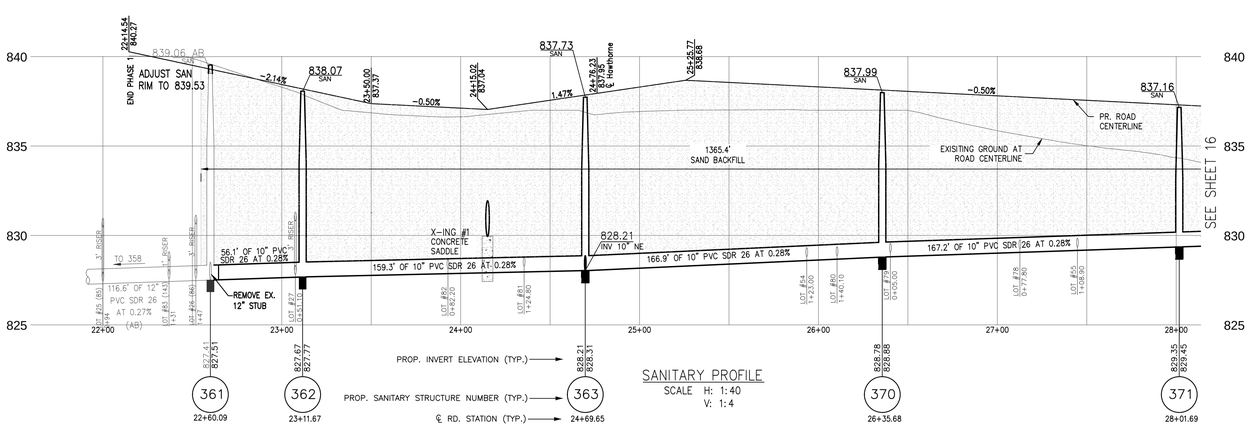

COMPACTION OF TRENCHES IS REQUIRED IN ROADWAY CORRIDORS AND SIDEWALKS, AND PARKING LOTS (CLASS II SAND AT 95% COMPACTION). ROADWAY CORRIDORS CONSTITUTE FRONT OF HOUSE TO FRONT OF HOUSE IN RESIDENTIAL DEVELOPMENTS.

LEGEND:

	EXISTING	PROPOSED
SANITARY		
STORM		
WATER MAIN		
GAS LINE	GAS	GAS
OVERHEAD LINE	OHW	OHW
PUBLIC UTILITES		
DITCH/SWALE	>	>
RIGHT-OF-WAY		
EASEMENT		

PLAN & PROFILE - ROLLING MEADOW

ARBOR FARMS PHASE 2

CONSTRUCTION PLANS

PART OF THE NORTHWEST 1/4 OF SECTION 26, T.3S., R.6E., PITTSFIELD TOWNSHIP, WASHTENAW COUNTY, MICHIGAN

APPLICANT

PITTSFIELD LAND LLC
23370 COMMERCE DRIVE
FARMINGTON HILLS, MI 48335
248-921-3996
ATTN: JEFF KATZEN

DATE: 07-10-2019
PM: DWS
ENG: GMS
SURV: AEC
CAD: AGB
\DWG\9525.dwg
\DD\9525WS.C & G.S.
SCALE: 1"= 40'

STATUS:

REVISIONS
05-22-19 PER TWSP. & WCWRC LETTER
10-02-19 PER TWP ENG REVIEW LETTER
10-15-19 PER TWP ENG REVIEW LETTER
10-28-19 PER TWP ENG REVIEW LETTER

JOB NO. 9525.4.18

ENGINEERS . SURVEYORS
MLP AND ASSOCIATES, INC.
Michael L. Priest & Associates, Inc.
40655 Koppernick Road, Canton, MI 48187
phone: (734) 459-8560
fax: (734) 459-2585

SHEET 15

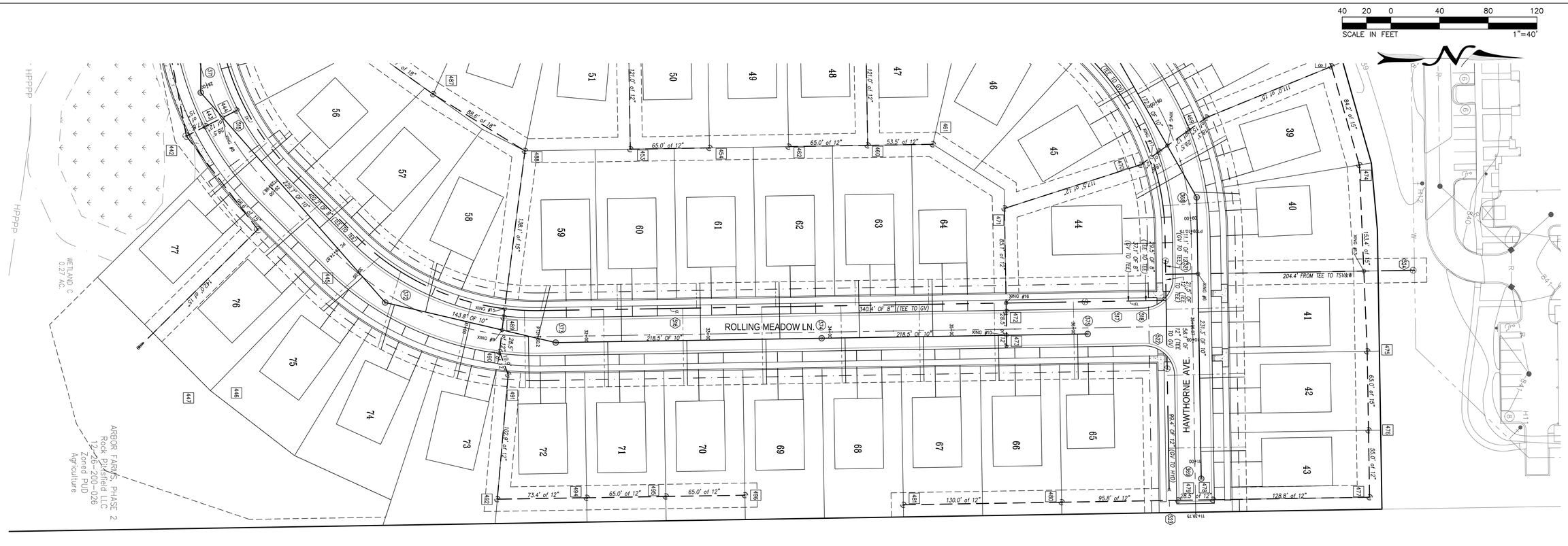

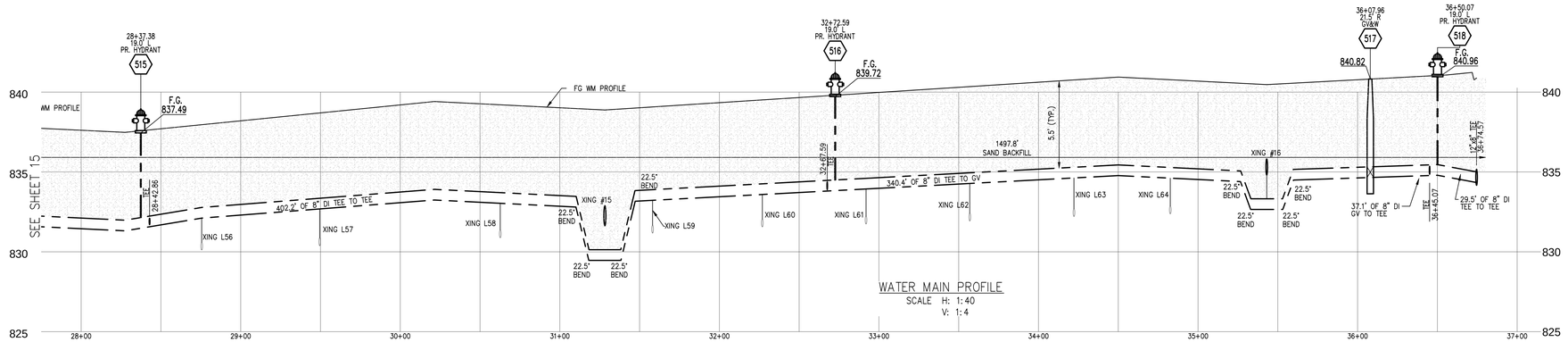

COMPACTION OF TRENCHES IS REQUIRED IN ROADWAY CORRIDORS AND SIDEWALKS, AND PARKING LOTS (CLASS II SAND AT 95% COMPACTION). ROADWAY CORRIDORS CONSTITUTE FRONT OF HOUSE TO FRONT OF HOUSE IN RESIDENTIAL DEVELOPMENTS.

CROSSING TABLE LOCATED ON SHEET 14

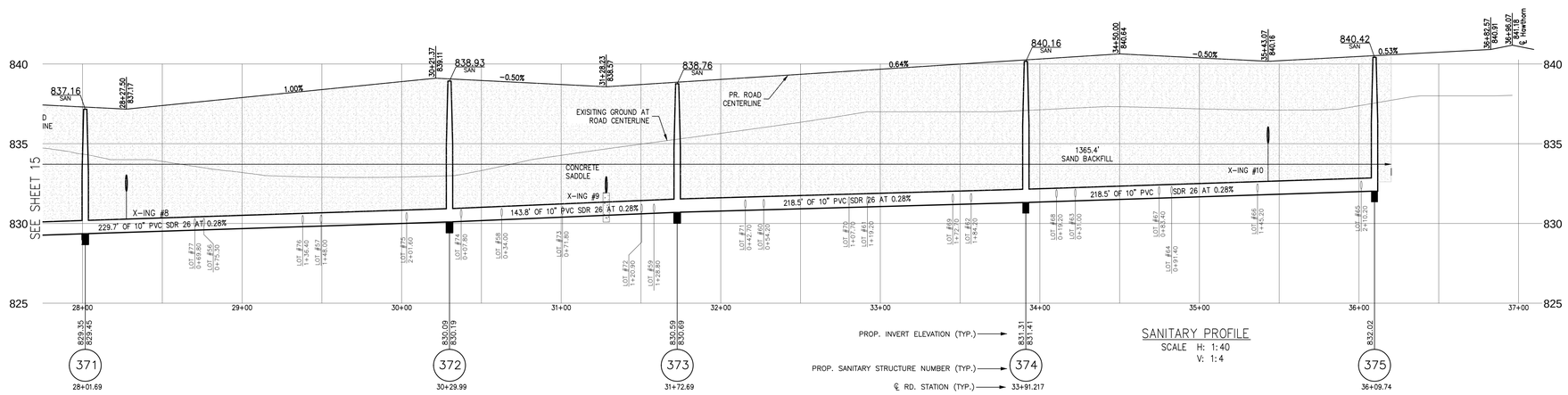

LEGEND:

	EXISTING	PROPOSED
SANITARY		
STORM		
WATER MAIN		
GAS LINE	GAS	GAS
OVERHEAD LINE	OHW	OHW
PUBLIC UTILITES		
DITCH/SWALE		
RIGHT-OF-WAY		
EASEMENT		

PLAN & PROFILE - ROLLING MEADOW

ARBOR FARMS PHASE 2

CONSTRUCTION PLANS

PART OF THE NORTHWEST 1/4 OF SECTION 26, T.3S., R.6E., PITTSFIELD TOWNSHIP, WASHTENAW COUNTY, MICHIGAN

SHEET 16

APPLICANT
PITTSFIELD LAND LLC
23370 COMMERCE DRIVE
FARMINGTON HILLS, MI 48335
248-921-3996
ATTN: JEFF KATZEN

DATE: 07-10-2019
PM: GMS
PIC: GMS
SURV: AEC
CAD: AGB
\DWG\9525.dwg
XCATMU:S.C. & G.S.
SCALE: 1" = 40'

STATUS:

REVISIONS
09-27-19 PER TWSP. & WCWRC LETTER
10-02-19 PER TWP. ENG REVIEW LETTER
10-18-19 PER TWP. ENG REVIEW LETTER
10-28-19 PER TWP. ENG REVIEW LETTER

JOB NO. 9525.4.18

ENGINEERS • SURVEYORS
MLP AND ASSOCIATES, INC.
Michael L. Priest & Associates, Inc.
40655 Koppernick Road, Canton, MI 48187
phone: (734) 459-8560
fax: (734) 459-2585

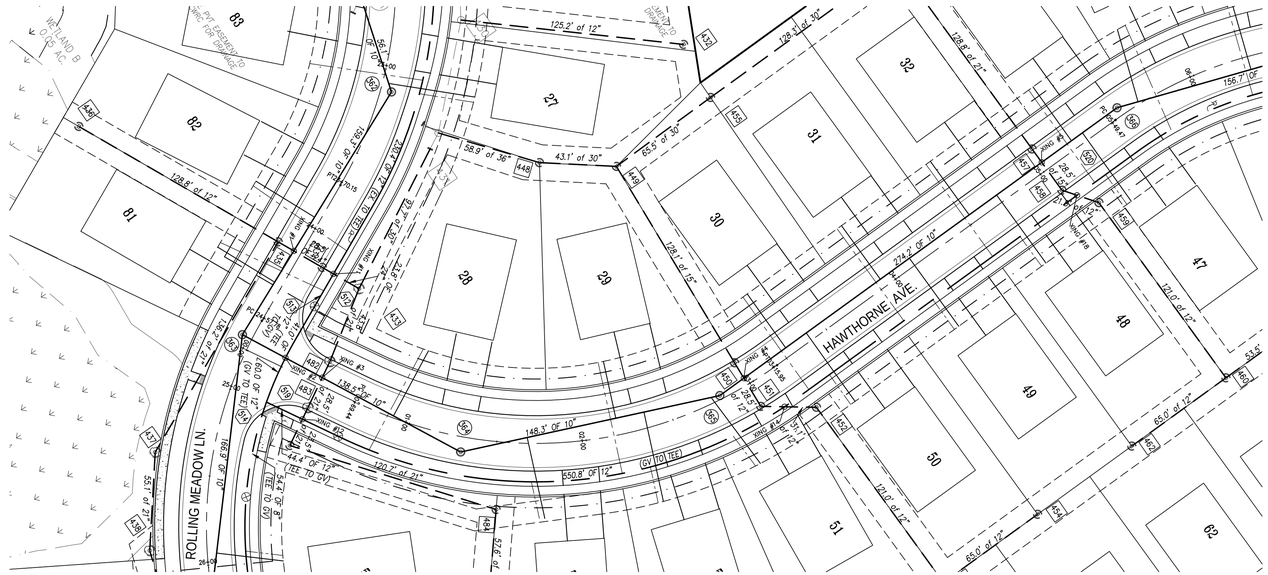

40 20 0 40 80 120
SCALE IN FEET 1"=40'

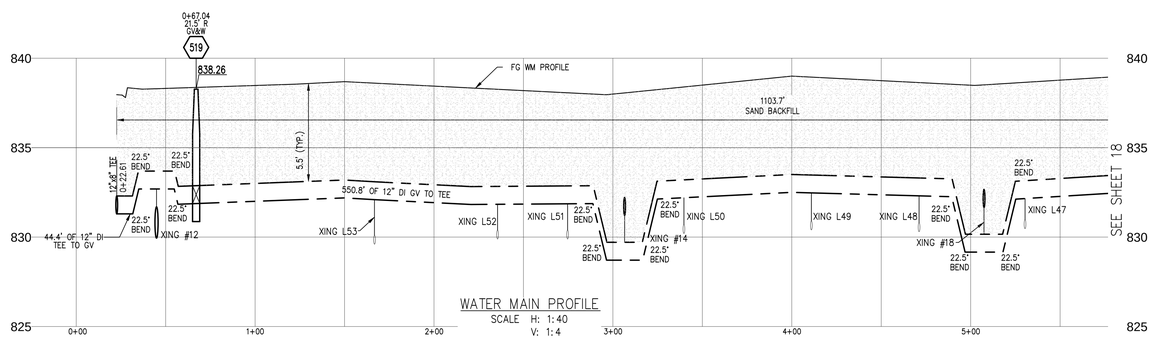

WATER MAIN PROFILE
SCALE H: 1:40
V: 1:4

CROSSING TABLE LOCATED ON SHEET 14

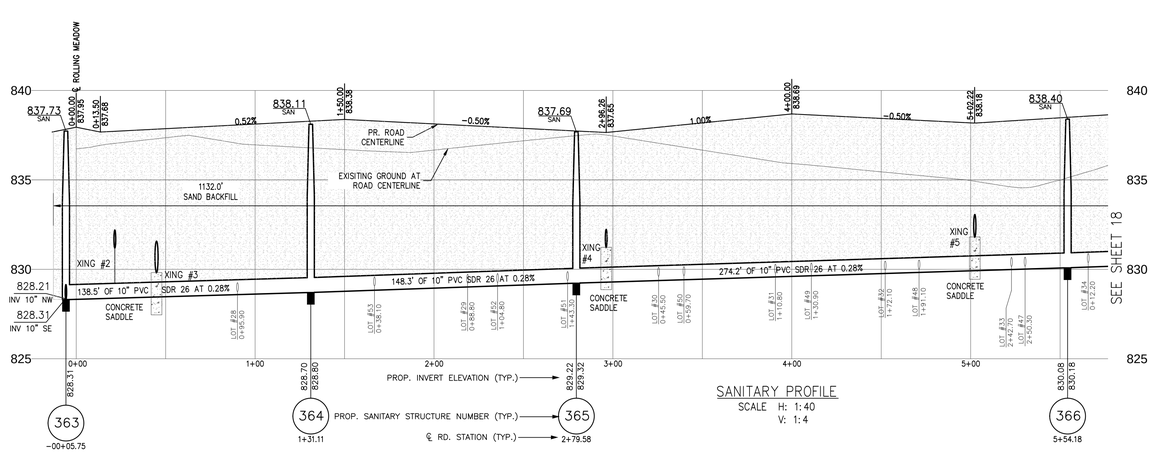

SANITARY PROFILE
SCALE H: 1:40
V: 1:4

COMPACTION OF TRENCHES IS REQUIRED IN ROADWAY CORRIDORS AND SIDEWALKS, AND PARKING LOTS (CLASS II SAND AT 95% COMPACTION). ROADWAY CORRIDORS CONSTITUTE FRONT OF HOUSE TO FRONT OF HOUSE IN RESIDENTIAL DEVELOPMENTS.

LEGEND:

	EXISTING	PROPOSED
SANITARY		
STORM		
WATER MAIN		
GAS LINE	GAS	GAS
OVERHEAD LINE	OHW	OHW
PUBLIC UTILITES		
DITCH/SWALE	>	>
RIGHT-OF-WAY		
EASEMENT		

PLAN & PROFILE - HAWTHORNE

ARBOR FARMS PHASE 2
CONSTRUCTION PLANS
PART OF THE NORTHWEST 1/4 OF SECTION 26, T.3S., R.6E., PITTSFIELD TOWNSHIP, WASHTENAW COUNTY, MICHIGAN

SHEET 17

ENGINEERS, SURVEYORS
MLP AND ASSOCIATES, INC.
Michael L. Priest & Associates, Inc.
40655 Koppernick Road, Canton, MI 48187
phone: (734) 459-8560
fax: (734) 459-2585

APPLICANT
PITTSFIELD LAND LLC
23370 COMMERCE DRIVE
FARMINGTON HILLS, MI 48335
248-921-3996
ATTN: JEFF KATZEN

DATE: 07-10-2019
PM: GMS
ENG: GMS
SURV: AEC
CAD: ADB
\DWG\9525.dwg
VOLATIMU.S.C. & G.S.
SCALE: 1"= 40'

STATUS:

REVISIONS
10-02-19 PER TWSP. & WCWRC LETTER
10-02-19 PER TWP ENG REVIEW LETTER
10-28-19 PER TWP ENG REVIEW LETTER
10-28-19 PER TWP ENG REVIEW LETTER

JOB NO. 9525.4.18

LEGEND:

	EXISTING	PROPOSED
SANITARY		
STORM		
WATER MAIN		
GAS LINE	GAS	GAS
OVERHEAD LINE	OHW	OHW
PUBLIC UTILITES		
DITCH/SWALE		
RIGHT-OF-WAY		
EASEMENT		

CROSSING TABLE LOCATED ON SHEET 14

COMPACTION OF TRENCHES IS REQUIRED IN ROADWAY CORRIDORS AND SIDEWALKS, AND PARKING LOTS (CLASS II SAND AT 95% COMPACTION). ROADWAY CORRIDORS CONSTITUTE FRONT OF HOUSE TO FRONT OF HOUSE IN RESIDENTIAL DEVELOPMENTS.

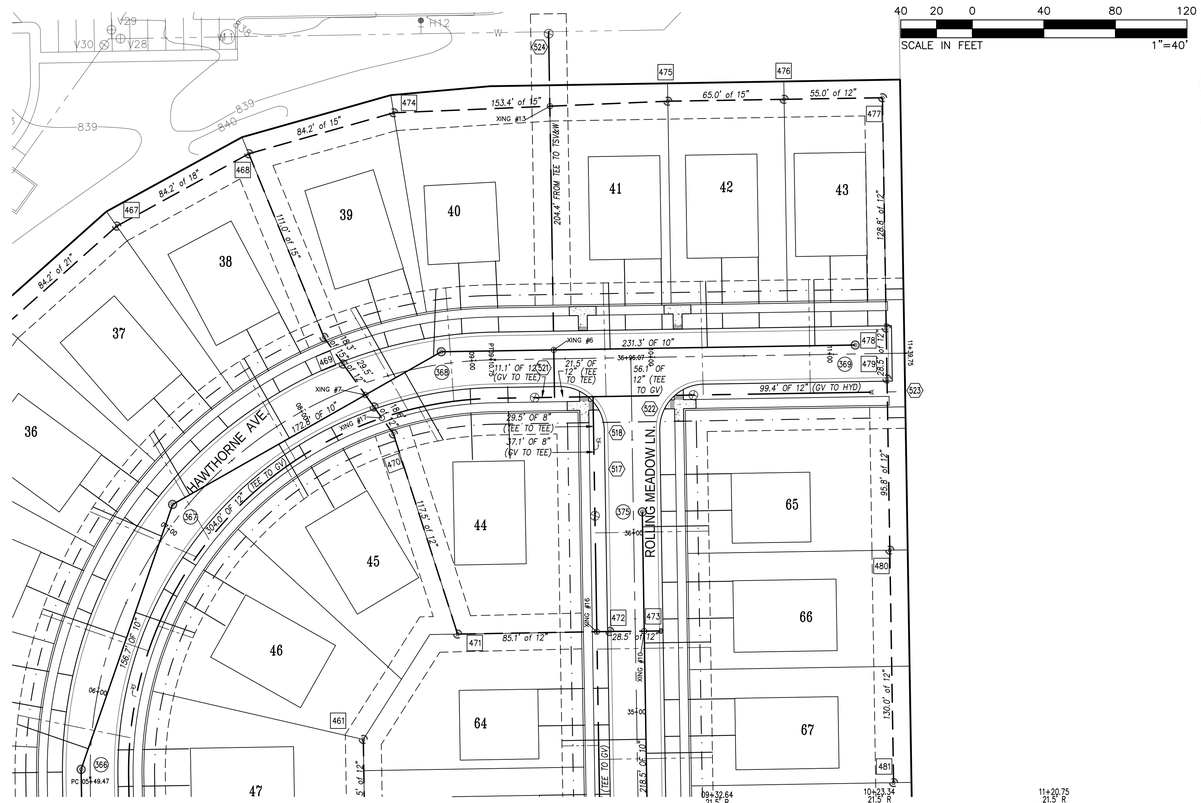

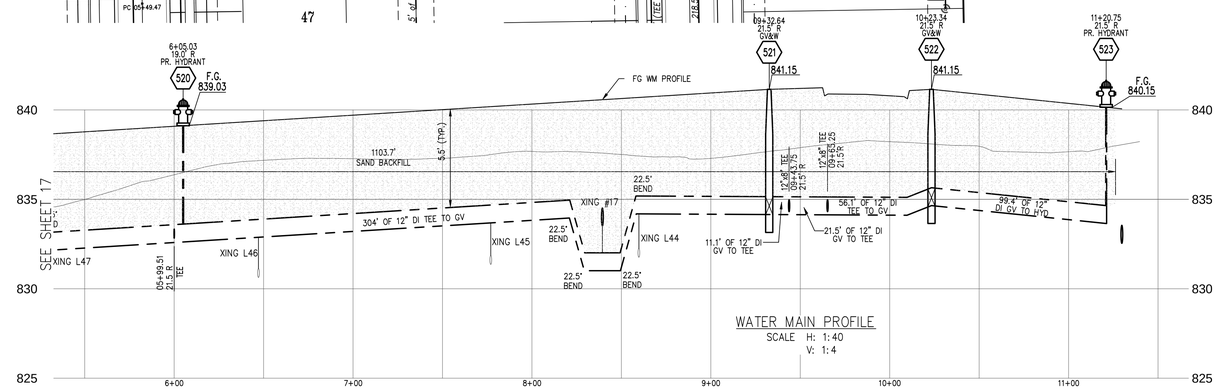

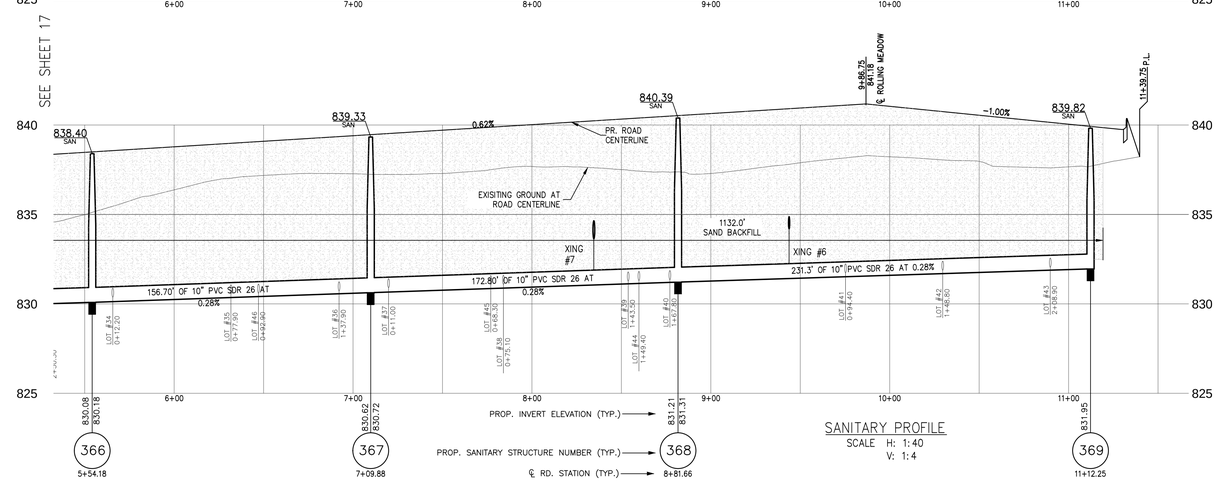

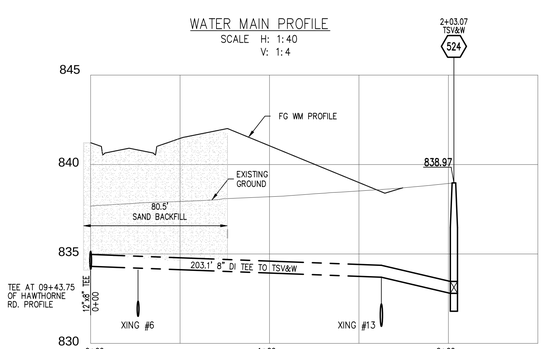

PLAN & PROFILE - HAWTHORNE

ARBOR FARMS PHASE 2

CONSTRUCTION PLANS

PART OF THE NORTHWEST 1/4 OF SECTION 26, T.3S., R.6E., PITTSFIELD TOWNSHIP, WASHTENAW COUNTY, MICHIGAN

SHEET 18

ENGINEERS, SURVEYORS AND ASSOCIATES, INC.
MLP
Michael L. Priest & Associates, Inc.
40655 Koppernick Road, Canton, MI 48187
phone: (734) 459-8560
fax: (734) 459-2585

APPLICANT
PITTSFIELD LAND LLC
23370 COMMERCE DRIVE
FARMINGTON HILLS, MI 48335
248-921-3996
ATTN: JEFF KATZEN

DATE: 07-10-2019
PM: GMS
ENG: GMS
SURV: AEC
CAD: ADB
\DWG\9525.dwg
VOLATIMU.S.C. & G.S.
SCALE: 1" = 40'

STATUS:

REVISIONS
09-27-19 PER TWSP. & WCWRC ENG REVIEW LETTER
10-02-19 PER TWP ENG REVIEW LETTER
10-08-19 PER TWP ENG REVIEW LETTER
10-28-19 PER TWP ENG REVIEW LETTER

JOB NO. 9525.4.18

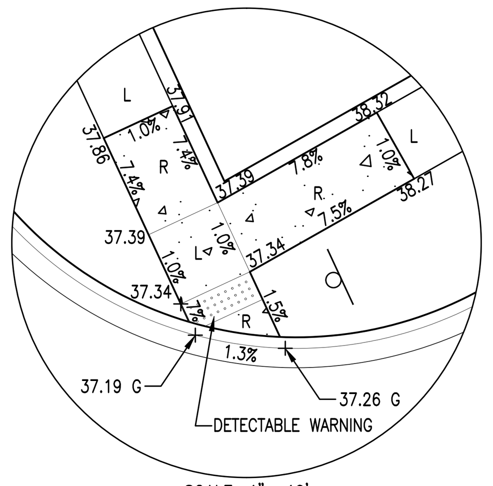

SCALE: 1"= 10'

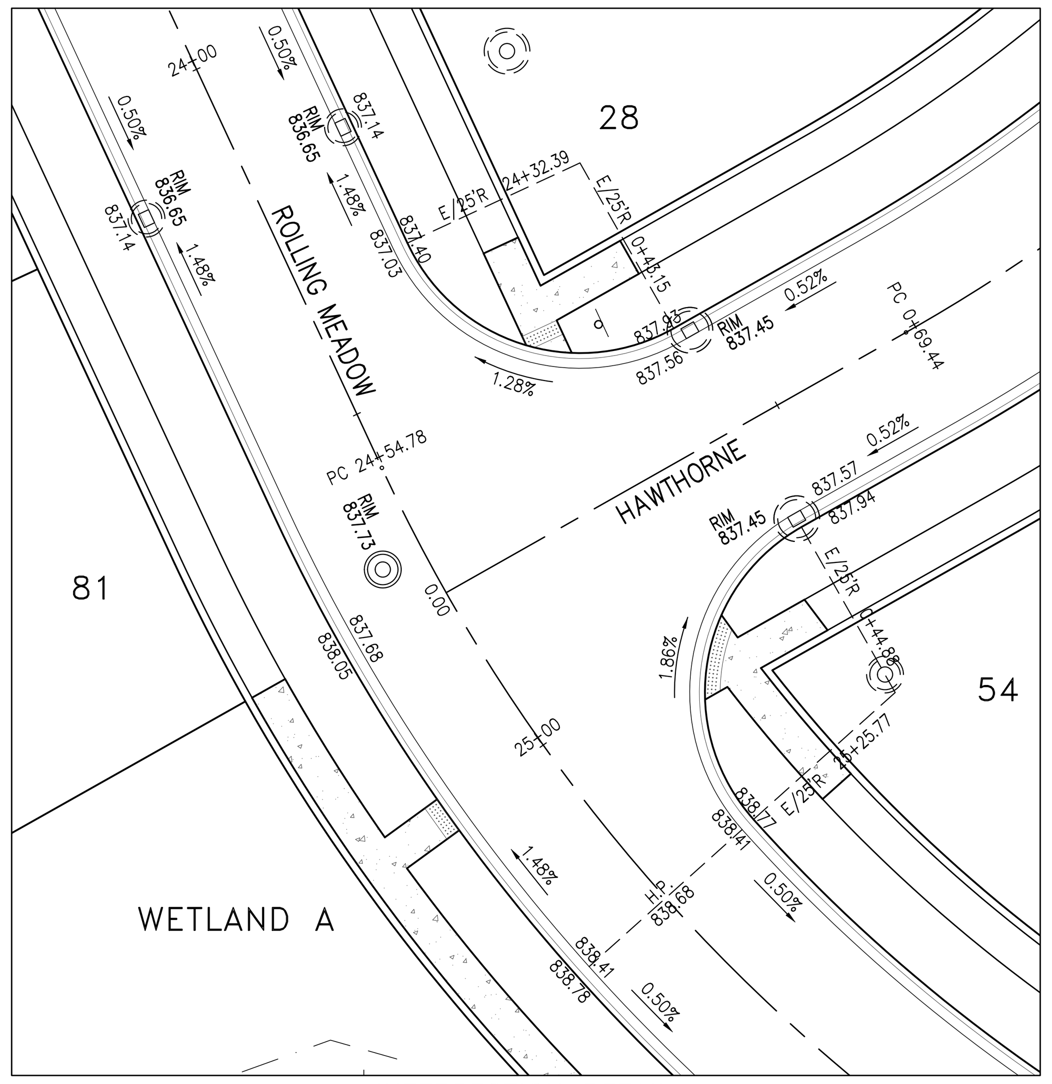

INTERSECTION DETAIL
SCALE: 1"= 20'

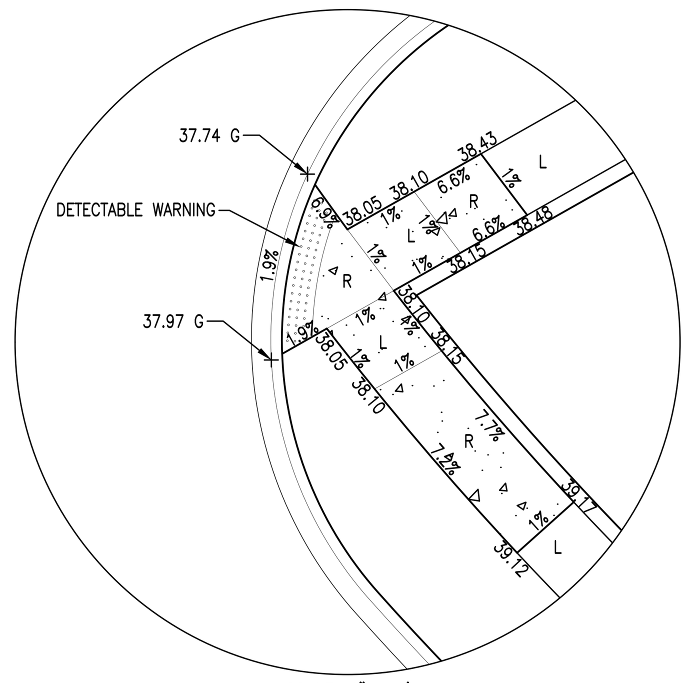

SCALE: 1"= 10'

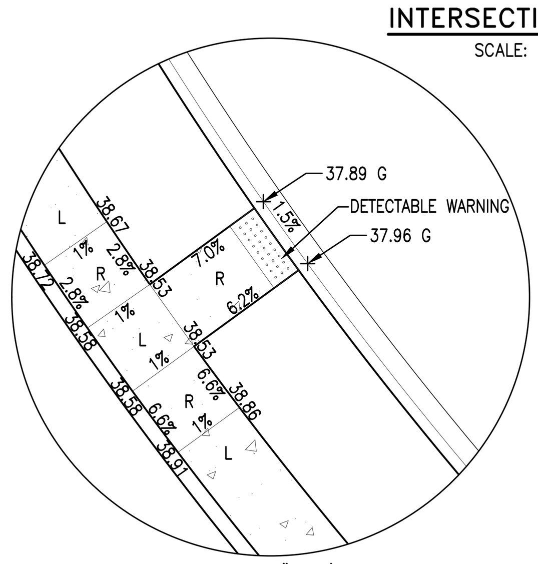

SCALE: 1"= 10'

NOTE:
GRADES SHOWN ARE TOP OF CURB AND TOP OF PAVEMENT, UNLESS OTHERWISE SPECIFIED.

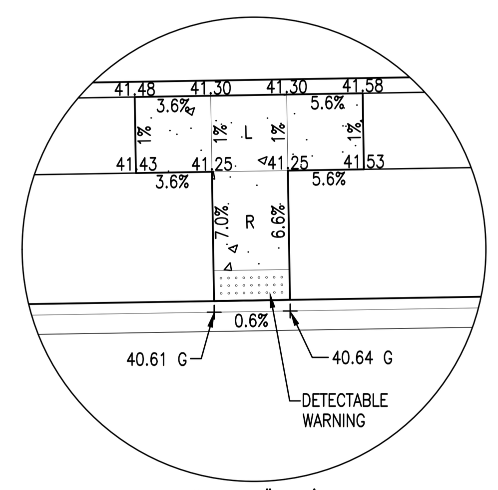

SCALE: 1"= 10'

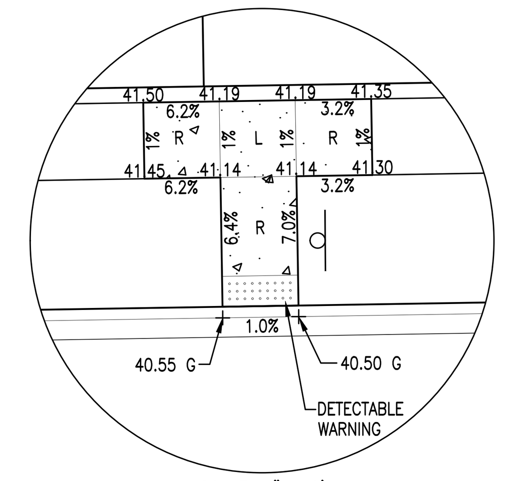

SCALE: 1"= 10'

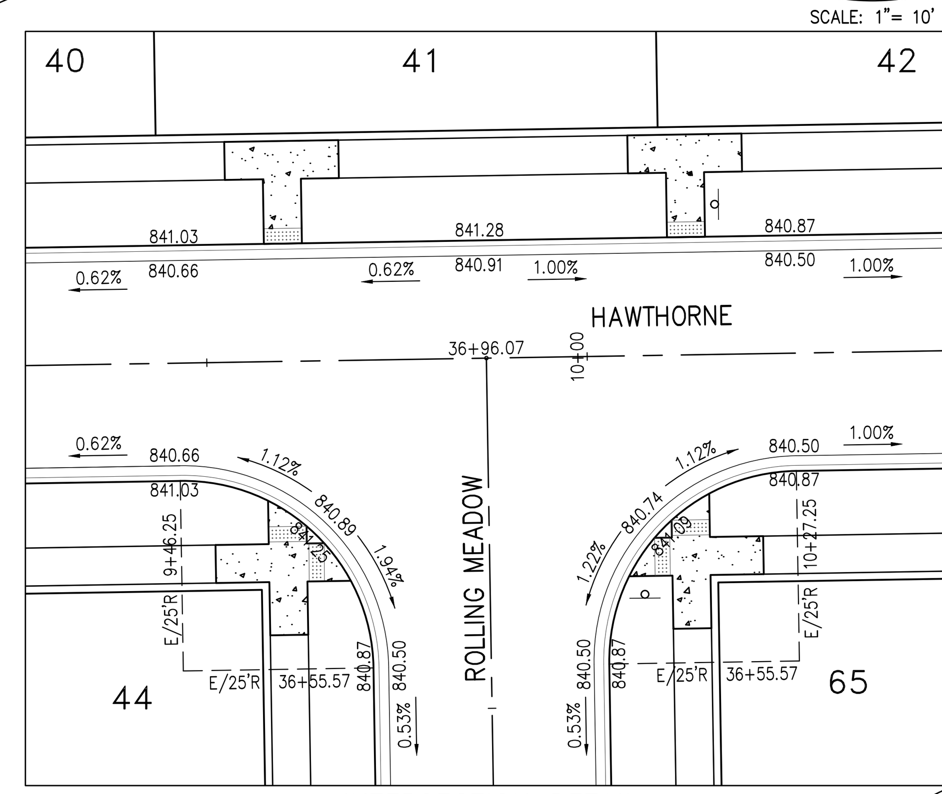

INTERSECTION DETAIL
SCALE: 1"= 20'

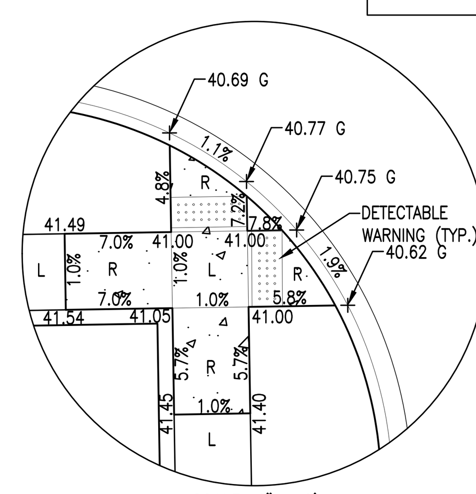

SCALE: 1"= 10'

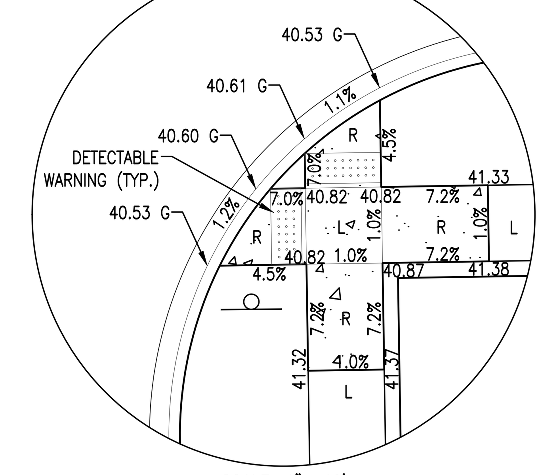

SCALE: 1"= 10'

6"x24" CONCRETE
ROLL CURB & GUTTER

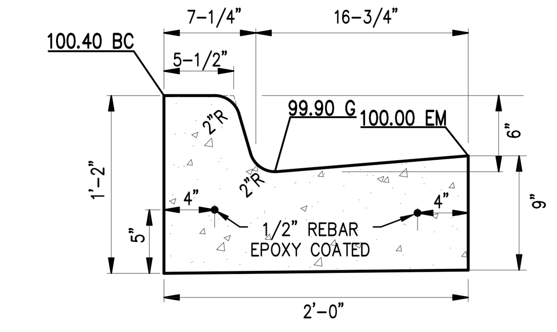

6"x24" CONCRETE
ROLL CURB &
REVERSE GUTTER PAN

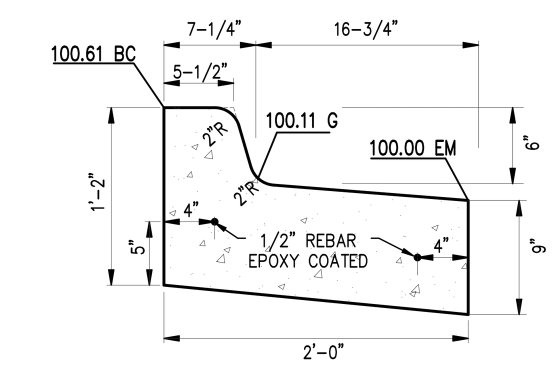

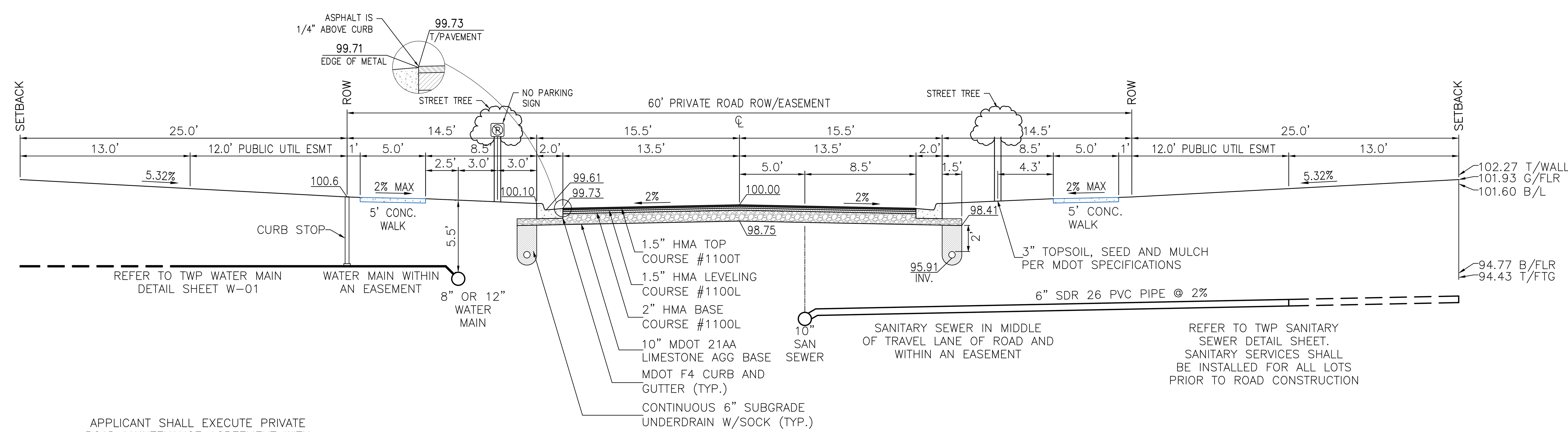

APPLICANT SHALL EXECUTE PRIVATE
ROAD MAINTENANCE AGREEMENT WITH
TOWNSHIP PRIOR TO ANY CONSTRUCTION

TYPICAL CROSS-SECTION
ASPHALT PAVEMENT
WITH CONCRETE CURB AND GUTTER
SCALE: 1"= 5'

PAVING DETAILS

ARBOR FARMS PHASE 2

CONSTRUCTION PLANS

PART OF THE NORTHWEST 1/4 OF SECTION 26, T.3S., R.6E., PITTSFIELD TOWNSHIP, WASHTENAW COUNTY, MICHIGAN

ENGINEERS. SURVEYORS
MLP AND ASSOCIATES, INC.
Michael L. Priest & Associates, Inc.
40655 Koppernick Road, Canton, MI 48187
phone: (734) 459-8560
fax: (734) 459-2585

STATUS:
REVISIONS
08-27-19 PER TWSP. & WCWRC
10-02-19 PER TWP ENG REVIEW LETTER
10-10-19 PER TWP ENG REVIEW LETTER
10-28-19 PER TWP ENG REVIEW LETTER

JOB NO. 9525.4.18

DATE: 07-10-2019
PM: GMS
ENG: GMS
SURV: AEC
CAD: ADB
\DWG\9525.dwg
VDATUM:U.S.C. & G.S.
SCALE: 1"= N/A

APPLICANT
PITTSFIELD LAND LLC
23370 COMMERCE DRIVE
FARMINGTON HILLS, MI 48335
248-921-3996
ATTN: JEFF KATZEN

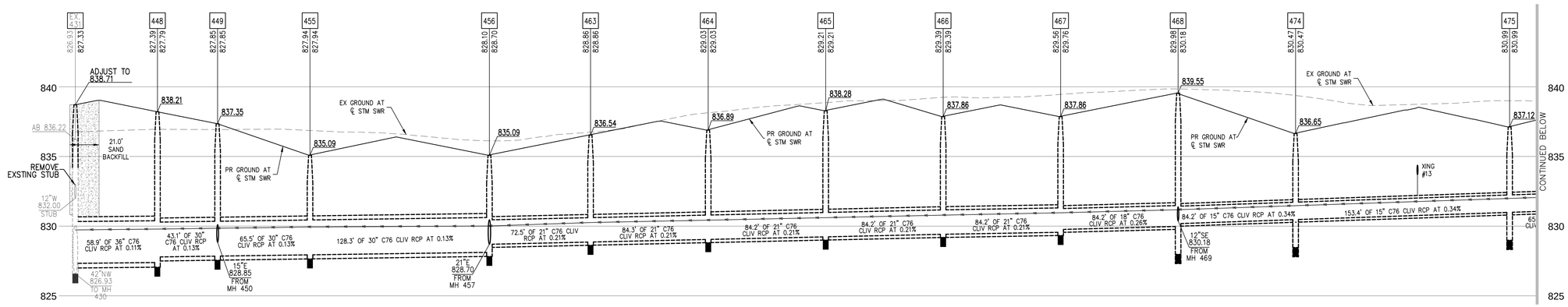

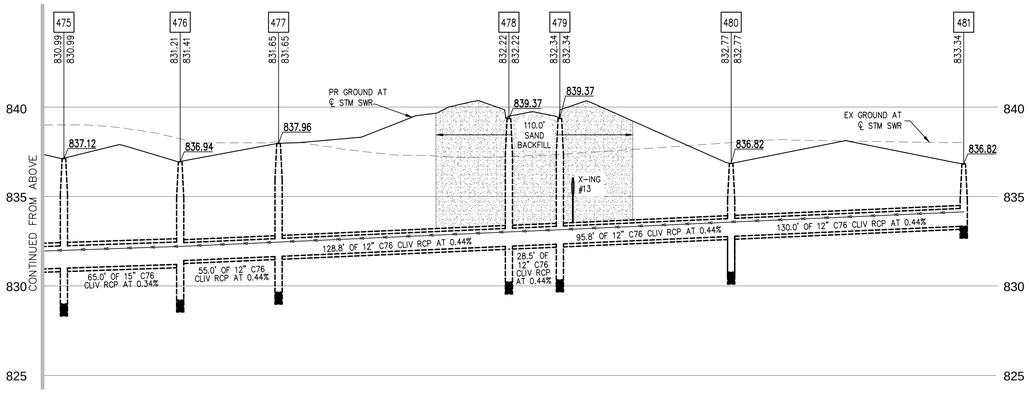

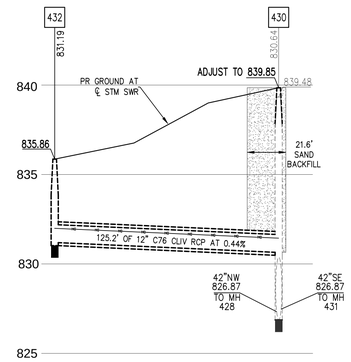

COMPACTION OF TRENCHES IS REQUIRED IN ROADWAY CORRIDORS AND SIDEWALKS, AND PARKING LOTS (CLASS II SAND AT 95% COMPACTION). ROADWAY CORRIDORS CONSTITUTE FRONT OF HOUSE TO FRONT OF HOUSE IN RESIDENTIAL DEVELOPMENTS.

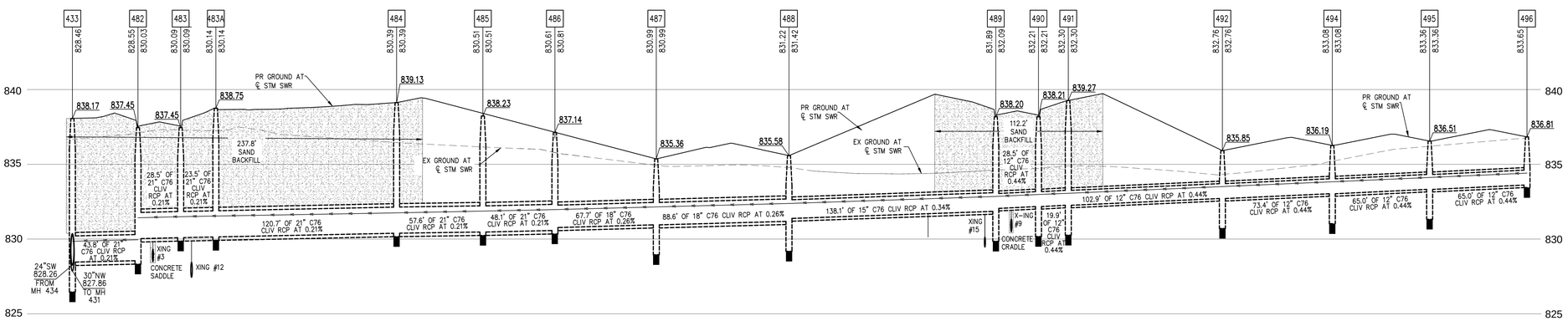

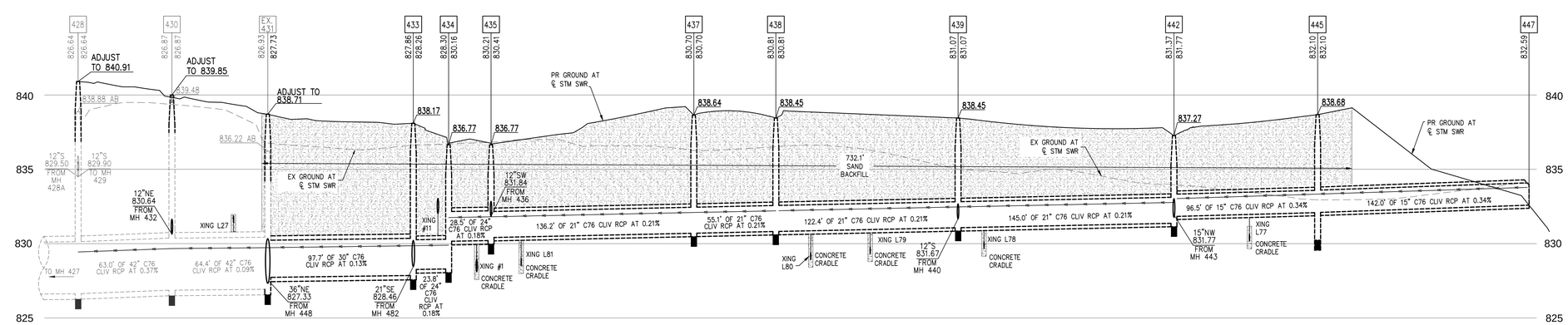

APPLICANT
PITTSFIELD LAND LLC
23370 COMMERCE DRIVE
FARMINGTON HILLS, MI 48335
248-921-3996
ATTN: JEFF KATZEN

DATE: 07-10-2019
PM: GMS
ENG: GMS
SURV: AEC
CAD: AGB
\DWG\9525.dwg
XDATUM:S.C. & G.S.
SCALE: 1" = 40'

STATUS:
REVISIONS
10-02-19 PER TWSP. & WCWRC LETTER
10-02-19 PER TWP ENG REVIEW LETTER
10-28-19 PER TWP ENG REVIEW LETTER
10-28-19 PER TWP ENG REVIEW LETTER

JOB NO. 9525.4.18

ENGINEERS • SURVEYORS
MLP
AND ASSOCIATES, INC.
Michael L. Priest & Associates, Inc.
40655 Koppernick Road, Canton, MI 48187
phone: (734) 459-8560
fax: (734) 459-2585

STORM SEWER PROFILES

ARBOR FARMS PHASE 2

CONSTRUCTION PLANS

PART OF THE NORTHWEST 1/4 OF SECTION 26, T.3S., R.6E., PITTSFIELD TOWNSHIP, WASHTENAW COUNTY, MICHIGAN

SHEET 20

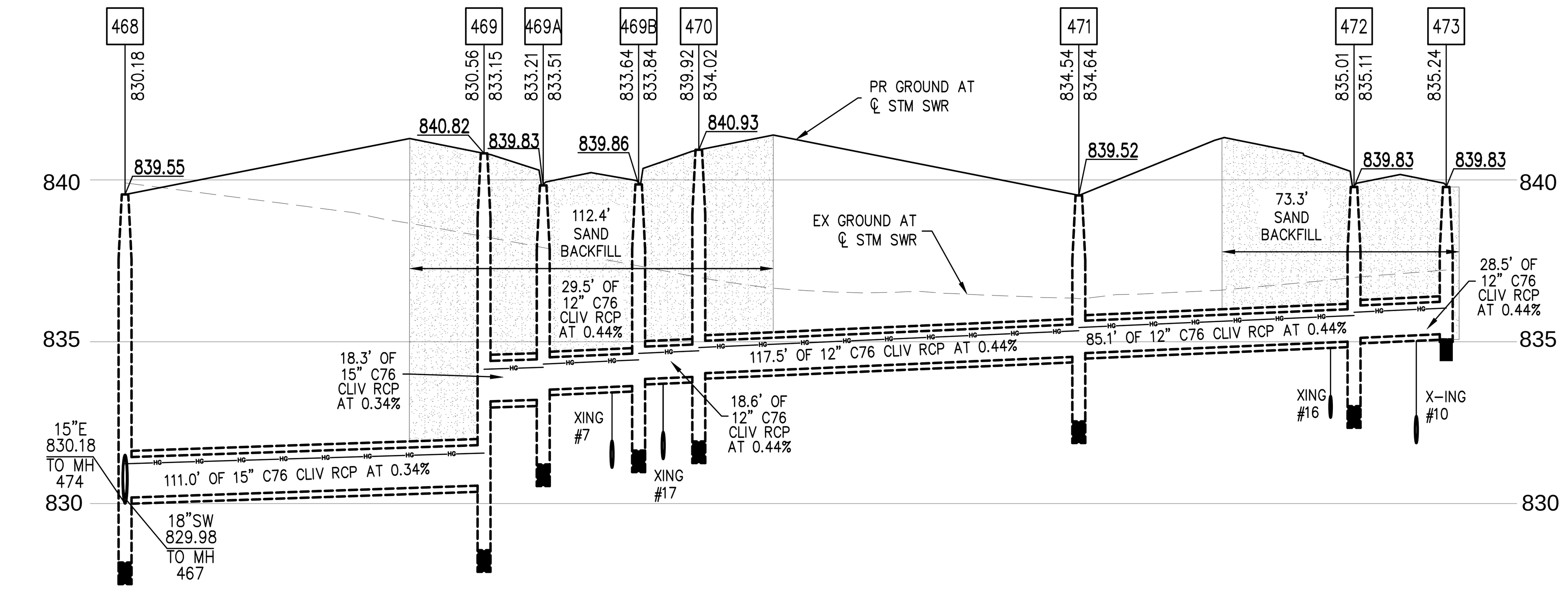

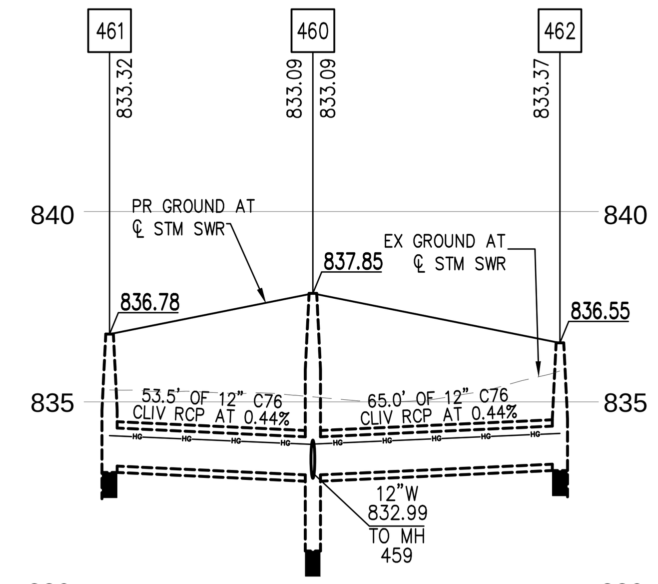

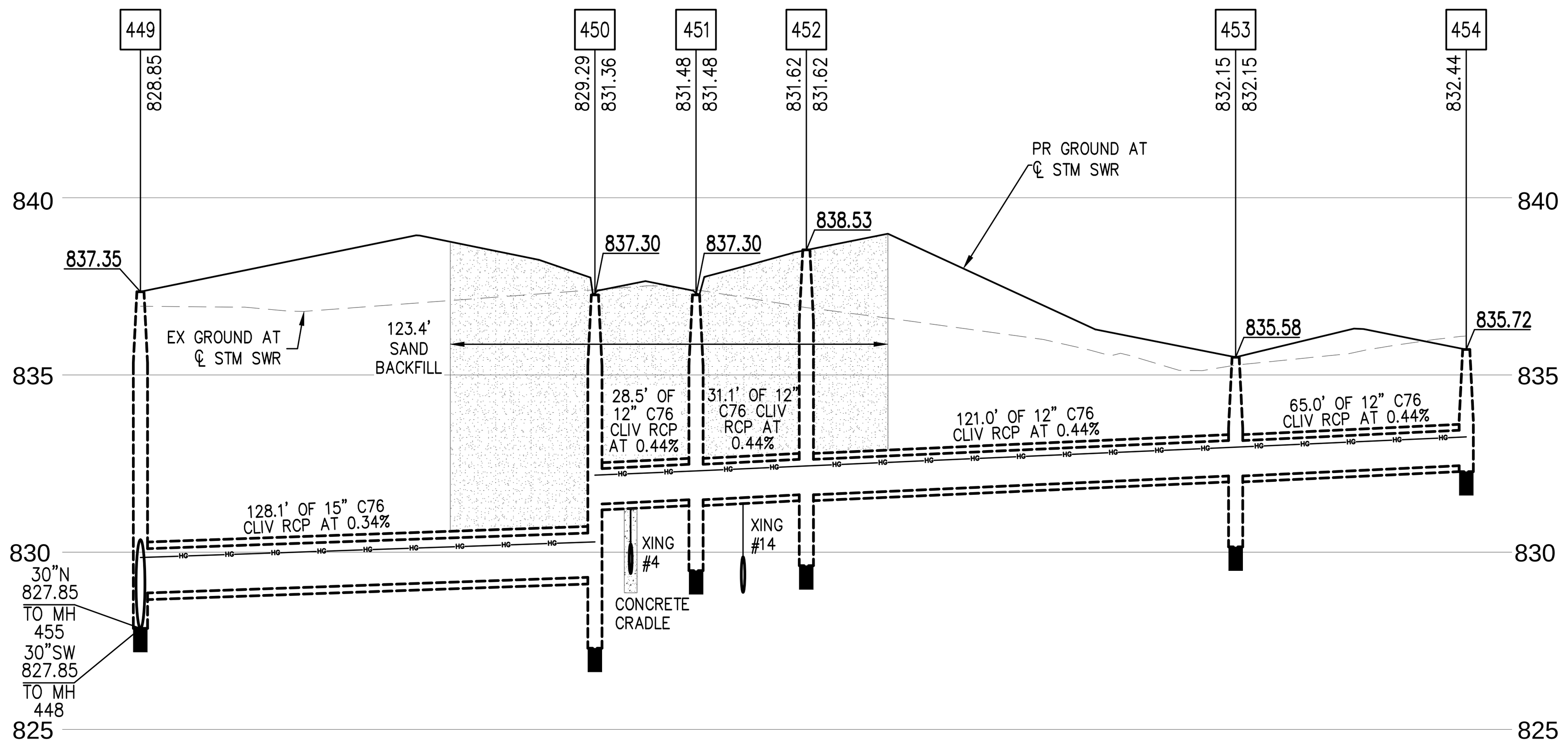

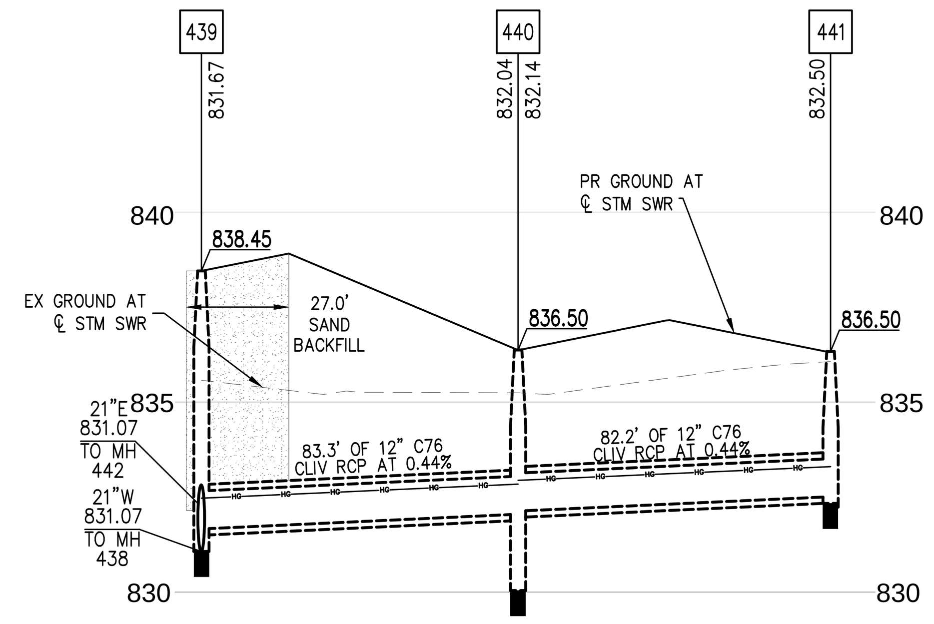

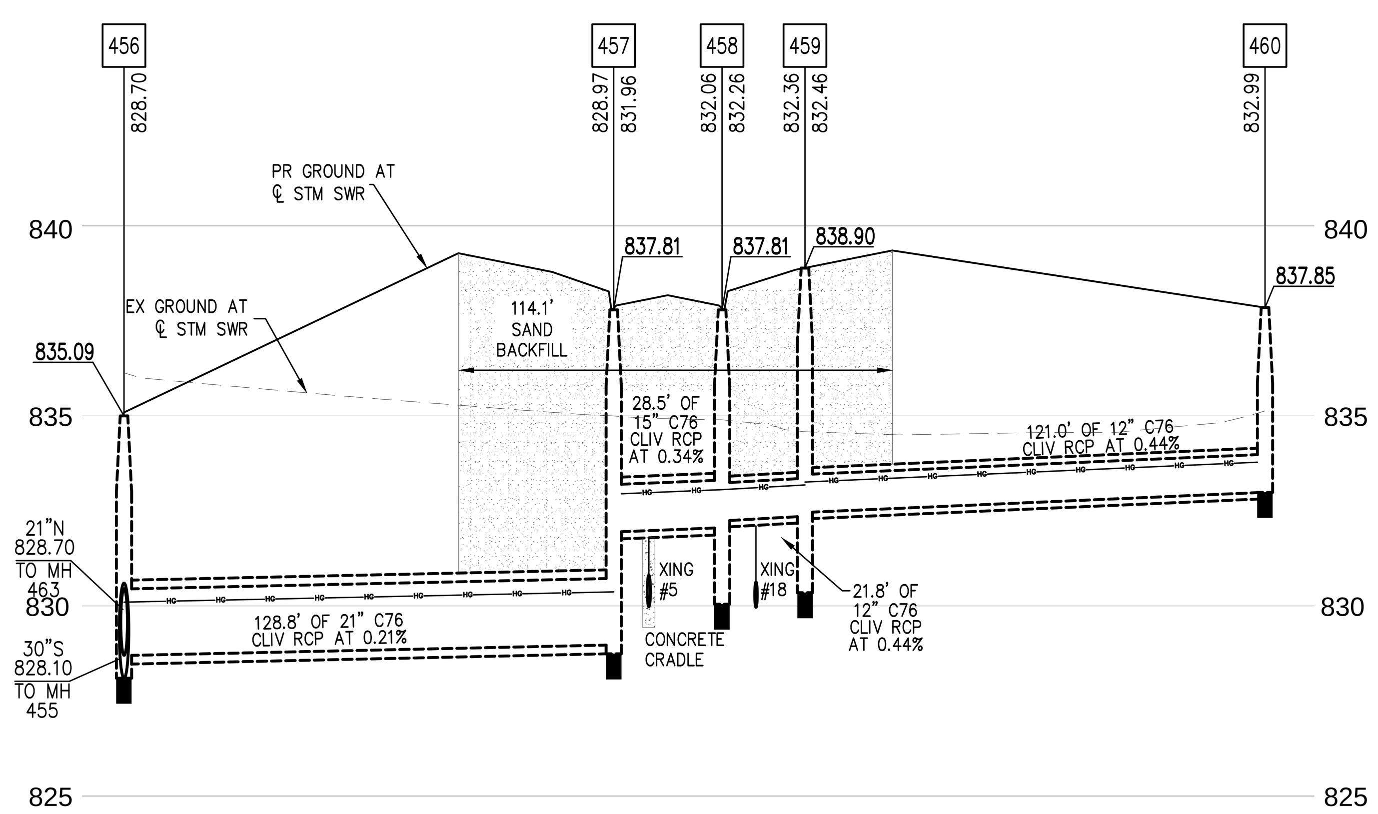

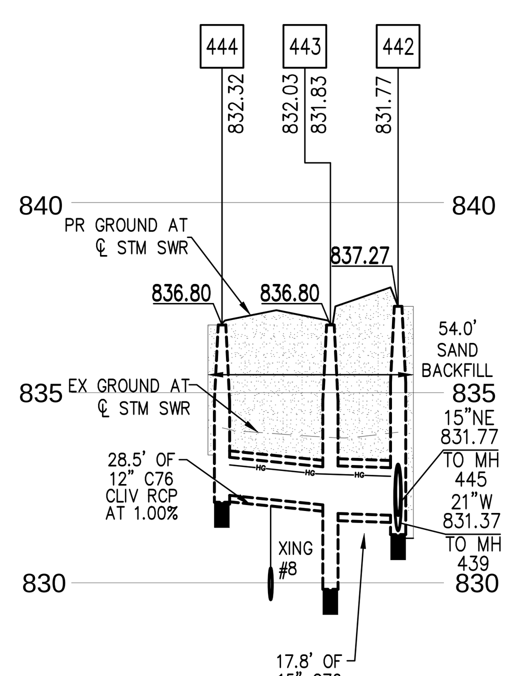

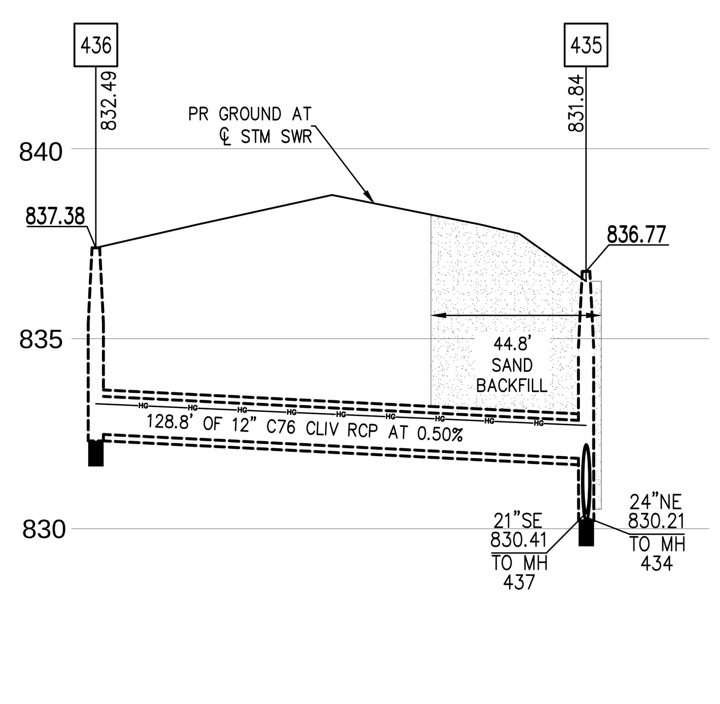

COMPACTION OF TRENCHES IS REQUIRED IN ROADWAY CORRIDORS AND SIDEWALKS, AND PARKING LOTS (CLASS II SAND AT 95% COMPACTION). ROADWAY CORRIDORS CONSTITUTE FRONT OF HOUSE TO FRONT OF HOUSE IN RESIDENTIAL DEVELOPMENTS.

40 20 40 80 120
1"=40'

STORM STRUCTURE SCHEDULE

STR. NO.	RIM ELEV.	STR. DIA. (FT)	EJIW CASTING/ GRATE OR EQUAL	SUMP (FT)	PIPE DIA. (IN)	I.E.	COVER (FT)	STRUCTURE DEPTH (FT)
496	836.81	2	EJIW 1040Z / N		12	833.65	1.99	3.33
495	836.51	4	EJIW 1040Z / N	2	12	833.36	1.98	5.31
					12	833.36	1.98	
494	836.19	4	EJIW 1040Z / N	2	12	833.08	1.95	5.28
					12	833.08	1.95	
492	835.85	4	EJIW 1040Z / N	2	12	832.76	1.93	5.26
					12	832.76	1.93	
491	839.27	4	EJIW 1040Z / B	2	12	832.30	5.80	9.13
					12	832.30	5.80	
490	838.21	4	EJIW 7045 / M1	2	12	832.21	4.83	8.16
					12	832.21	4.83	
489	838.20	4	EJIW 7045 / M1	2	15	831.89	4.87	8.50
					12	832.09	4.94	
488	835.58	4	EJIW 1040Z / N	2	18	831.22	2.65	6.57
					15	831.42	2.72	
487	835.36	4	EJIW 1040Z / N	2	18	830.99	2.66	6.58
					18	830.99	2.66	
486	837.14	5	EJIW 1040Z / N		21	830.61	4.55	6.76
					18	830.81	4.62	
485	838.23	5	EJIW 1040Z / N		21	830.51	5.74	7.95
					21	830.51	5.74	
484	839.13	5	EJIW 1040Z / B		21	830.39	6.76	8.97
					21	830.39	6.76	
483A	838.75	5	EJIW 1040Z / B		21	830.14	6.63	8.84
					21	830.14	6.63	
483	837.45	5	EJIW 7045 / M1		21	830.09	5.38	7.59
					21	830.09	5.38	
482	837.45	5	EJIW 7045 / M1		21	828.55	6.92	9.13
					21	830.03	5.44	
481	836.82	2	EJIW 1040Z / N		12	833.34	2.32	3.65
480	836.82	4	EJIW 1040Z / N	2	12	832.77	2.89	6.22
					12	832.77	2.89	
479	839.37	4	EJIW 7045 / M1	2	12	832.34	5.86	9.19
					12	832.34	5.86	
478	839.37	4	EJIW 7045 / M1	2	12	832.22	5.98	9.32
					12	832.22	5.98	
477	837.96	4	EJIW 1040Z / B	2	12	831.65	5.14	8.47
					12	831.65	5.14	
476	836.94	4	EJIW 1040Z / N	2	15	831.21	4.29	7.92
					12	831.41	4.36	
475	837.12	4	EJIW 1040Z / N	2	15	830.99	4.69	8.32
					15	830.99	4.69	
474	836.65	4	EJIW 1040Z / N	2	15	830.47	4.74	8.37
					15	830.47	4.74	
473	839.83	2	EJIW 7045 / M1		12	835.24	3.42	4.76
472	839.83	4	EJIW 7045 / M1	2	12	835.01	3.65	6.98
					12	835.11	3.55	
471	839.52	4	EJIW 1040Z / N	2	12	834.54	3.81	7.15
					12	834.64	3.71	
470	840.93	4	EJIW 1040Z / B	2	12	833.92	5.84	9.17
					12	834.02	5.74	
469B	839.86	4	EJIW 7045 / M1	2	12	833.64	5.05	8.39
					12	833.84	4.85	
469A	839.83	4	EJIW 7045 / M1	2	15	833.21	5.18	8.81
					12	833.51	5.15	
469	840.82	4	EJIW 1040Z / B	2	15	830.56	8.82	12.45
					15	833.15	6.23	
468	839.55	4	EJIW 1040Z / B	2	18	829.98	7.86	11.78
					15	830.18	7.93	
					15	830.18	7.93	
467	837.86	5	EJIW 1040Z / N		21	829.56	6.32	8.53
					18	829.76	6.39	
466	837.86	5	EJIW 1040Z / N		21	829.39	6.50	8.70
					21	829.39	6.50	
465	838.28	5	EJIW 1040Z / N		21	829.21	7.09	9.30
					21	829.21	7.09	

STORM STRUCTURE SCHEDULE

STR. NO.	RIM ELEV.	STR. DIA. (FT)	EJIW CASTING/ GRATE OR EQUAL	SUMP (FT)	PIPE DIA. (IN)	I.E.	COVER (FT)	STRUCTURE DEPTH (FT)
464	836.89	5	EJIW 1040Z / N		21	829.03	5.88	8.09
					21	829.03	5.88	
463	836.54	5	EJIW 1040Z / N		21	828.86	5.71	7.91
					21	828.86	5.71	
462	836.55	2	EJIW 1040Z / N		12	833.37	2.01	3.34
461	836.78	2	EJIW 1040Z / N		12	833.32	2.29	3.62
460	837.85	4	EJIW 1040Z / B	2	12	832.99	3.69	7.03
					12	833.09	3.59	
					12	833.09	3.59	
459	838.90	4	EJIW 1040Z / B	2	12	832.36	5.38	8.71
					12	832.46	5.28	
458	837.81	4	EJIW 7045 / M1	2	15	832.06	4.31	7.94
					12	832.26	4.38	
457	837.81	5	EJIW 7045 / M1		21	828.97	6.86	9.07
					15	831.96	4.41	
456	835.09	5	EJIW 1040Z / N		30	828.10	4.20	7.28
					21	828.70	4.41	
					21	828.70	4.41	
455	835.09	5	EJIW 1040Z / N		30	827.94	4.36	7.45
					30	827.94	4.36	
454	835.72	2	EJIW 1040Z / N		12	832.44	2.12	3.45
453	835.58	4	EJIW 1040Z / N	2	12	832.15	2.26	5.60
					12	832.15	2.26	
452	838.53	4	EJIW 1040Z / B	2	12	831.62	5.74	9.08
					12	831.62	5.74	
451	837.30	4	EJIW 7045 / M1	2	12	831.48	4.65	7.98
					12	831.48	4.65	
450	837.30	4	EJIW 7045 / M1	2	15	829.29	6.58	10.20
					12	831.36	4.78	
449	837.35	5	EJIW 1040Z / N		30	827.85	6.71	9.79
					30	827.85	6.71	
					15	828.85	7.06	
448	838.21	5	EJIW 1040Z / N		36	827.39	7.48	11.15
					30	827.79	7.62	
447	0.00		F.E.S.		15	832.59		
445	838.68	4	EJIW 1040Z / B	2	15	832.10	5.14	8.76
					15	832.10		
444	836.80	2	EJIW 7045 / M1		12	832.32	3.31	4.65
443	836.82	4	EJIW 7045 / M1	2	15	831.83	3.55	7.17
					12	832.03	3.62	
442	837.27	5	EJIW 1040Z / B		21	831.37	3.92	6.12
					15	831.77	4.06	
					15	831.77	4.06	
441	836.50	2	EJIW 1040Z / N		12	832.50	2.84	4.17
440	836.50	4	EJIW 1040Z / N	2	12	832.04	3.30	6.63
					12	832.14	3.20	
439	838.45	5	EJIW 1040Z / B		21	831.07	5.40	7.61
					21	831.07	5.40	
					12	831.67	5.61	
438	838.45	5	EJIW 1040Z / B		21	830.81	5.66	7.87
					21	830.81	5.66	
437	838.64	5	EJIW 1040Z / B		21	830.70	5.96	8.17
					21	830.70	5.96	
436	837.38	2	EJIW 1040Z / N		12	832.49	3.73	5.06
435	836.77	5	EJIW 7045 / M1		24	830.21	4.31	6.81
					21	830.41	4.38	
					12	831.84	3.76	
434	836.77	5	EJIW 7045 / M1		24	828.30	6.22	8.72
					24	830.16	4.36	
433	838.17	6	EJIW 1040Z / B		30	827.86	7.52	10.60
					24	828.26	7.66	
					21	828.46	7.73	
432	835.86	2	EJIW 1040Z / N		12	831.19	3.50	4.84
431	838.71	6	EJIW 1040Z / B		42	826.93	7.91	12.16
					36	827.33	8.05	
					30	827.73	8.19	
430	839.85	6	EJIW 1040Z / B		42	826.87	9.11	13.36
					42	826.87	9.11	
					12	830.64	8.04	

APPLICANT
PITTSFIELD LAND LLC
23370 COMMERCE DRIVE
FARMINGTON HILLS, MI 48335
248-921-3996
ATTN: JEFF KATZEN

DATE: 07-10-2019
PM: GMS
ENG: GMS
SURV: AEC
CAD: ADB
\DWG\9525.dwg
VDATUM:U.S.C. & G.S.
SCALE: 1"= 40'

JOB NO. 9525.4.18

STATUS:
REVISIONS
08-27-19 PER TWSP. & WCWRC
10-02-19 PER TWP ENG REVIEW LETTER
10-10-19 PER TWP ENG REVIEW LETTER
10-28-19 PER TWP ENG REVIEW LETTER

ENGINEERS . SURVEYORS
MLP AND ASSOCIATES, INC.
Michael L. Priest & Associates, Inc.
40655 Koppernick Road, Canton, MI 48187
phone: (734) 459-8560
fax: (734) 459-2585

STORM SEWER PROFILES & STRUCTURE SCHEDULE

ARBOR FARMS PHASE 2

CONSTRUCTION PLANS

PART OF THE NORTHWEST 1/4 OF SECTION 26, T.3S., R.6E., PITTSFIELD TOWNSHIP, WASHTENAW COUNTY, MICHIGAN

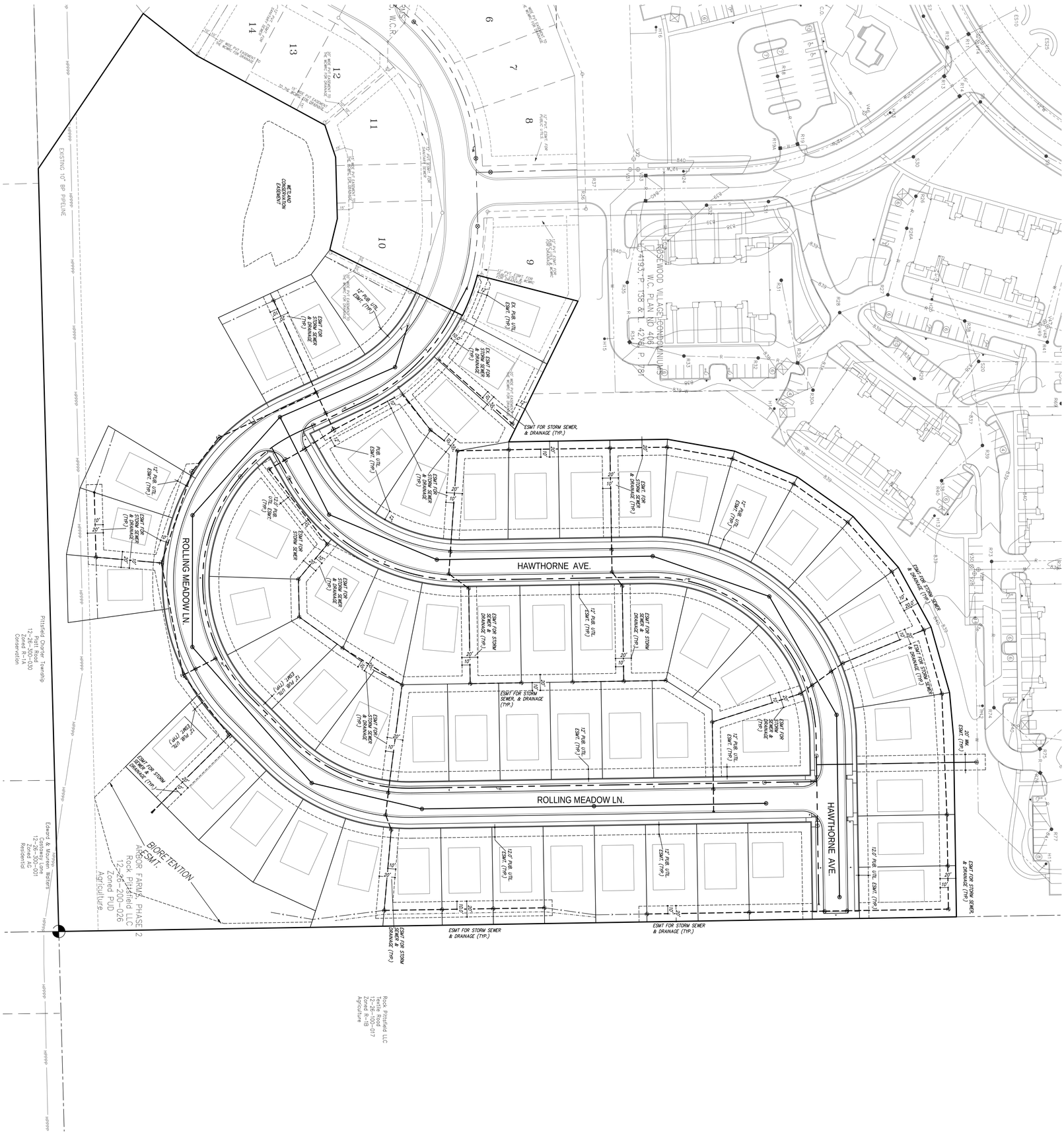

SCALE IN FEET

60 30 60 120 180

1"= 60'

EASEMENT PLAN

SHEET 22

ARBOR FARMS PHASE 2

CONSTRUCTION PLANS

PART OF THE NORTHWEST 1/4 OF SECTION 26, T.3S., R.6E.,
PITTSFIELD TOWNSHIP, WASHTENAW COUNTY, MICHIGAN

ENGINEERS, SURVEYORS
MLP AND ASSOCIATES, INC.
Michael L. Priest & Associates, Inc.
40655 Koppernick Road, Canton, MI 48187
phone: (734) 459-8560
fax: (734) 459-2585

STATUS:

REVISIONS
08-27-19 PER TWSP. & WCWRC
10-02-19 PER TWP ENG REVIEW LETTER
10-10-19 PER TWP ENG REVIEW LETTER
10-28-19 PER TWP ENG REVIEW LETTER

JOB NO. 9525.4.18

DATE: 07-10-2019
PM: GMS
ENG: GMS
SURV: AEC
CAD: ABB
\DWG\9525.dwg
VDATUM:U.S.C. & G.S.
SCALE: 1"= 60'

APPLICANT
PITTSFIELD LAND LLC
23370 COMMERCE DRIVE
FARMINGTON HILLS, MI 48335
248-921-3996
ATTN: JEFF KATZEN

Shrub Plantings
from
Wildtype Native Plants
900 North Every Road
Mason, MI 48854
info@wildtypeplants.com
517.244.1140

Scrub/Shrub Wetland Plantings
Shrub plantings within the scrub/shrub wetland (approximately 0.32 acres) will include 18 to 24-inch high, 1-gallon potted specimens. Shrub planting density will be installation on 3-foot centers and will include the following species:

Scientific Name	Common Name	Number
Rosa palustris	Swamp Rose	24
Salix discolor	Pussy Willow	24
Viburnum lentago	Nannyberry	24
Cornus sericea	Red Osier Dogwood	24
	Total	96

Wet Meadow Seed Mix
from
Native Connections
17080 Hoshel Road
Three Rivers, MI 49093
info@nativeconnections.net
269.580.4764

Seeding Rate: 33 pounds per acre
3.41 pounds grass; 2.59 pounds forbs; 27 pounds nurse crop
96 native seeds per square foot
0.32 acres requires 10.56 pounds total

Grasses, Sedges, and Rushes

Scientific Name	Common Name	PLS Oz/Acre
Bromus ciliates	Fringed Brome	8.00
Calamagrostis canadensis	Bluejoint Grass	0.50
Carex bebbii	Bebb's Oval Sedge	1.00
Carex comosa	Bristly Sedge	2.00
Carex hystericina	Porcupine Sedge	2.00
Carex vulpinoidea	Fox Sedge	1.50
Elymus virginicus	Virginia Wild Rye	32.00
Juncus effuses	Soft Rush	0.25
Leersia oryxoides	Rice Cut Grass	0.25
Panicum virgatum	Switchgrass	3.00
Scirpus atrovirens	Dark Green Bulrush	0.75
Scirpus cyperinus	Wool Grass	0.25
Spartina pectinata	Prairie Cordgrass	2.50
	Total Grasses	54.50

Forbs

Scientific Name	Common Name	PLS Oz/Acre
Actinomeris alternifolia	Wingstem	0.25
Angelica atropurpurea	Angelica	4.00
Asclepias incarnata	Swamp Milkweed	1.00
Aster novae-angliae	New England Aster	0.25
Aster puniceus	Swamp Aster	0.50
Bidens cernua	Nodding Bur Marigold	0.25
Boltonia asteroids	False Aster	0.25
Cassia hebecarpa	Wild Senna	6.00
Eupatorium maculatum	Joe Pye Weed	0.50
Eupatorium perfoliatum	Boneset	0.25
Helenium autumnale	Sneezeweed	1.25
Helianthus grosseserratus	Saw-toothed Sunflower	0.25
Hypericum pyramidatum	Great St. John's Wort	1.00
Iris virginica	Southern Blue Flag Iris	3.00
Liatris spicata	Marsh Blazingstar	2.00
Lobelia siphilitica	Great Blue Lobelia	0.50
Ludwigia alternifolia	Seedbox	0.25
Lycopus americanus	Water Horehound	0.25
Mimulus ringens	Monkey Flower	0.10
Monarda fistulosa	Wild Bergamot	0.25
Physostegia virginiana	Obedient Plant	0.50
Pycnanthemum virginianum	Mountain Mint	0.50
Rudbeckia hirta	Black-Eyed Susan	5.25
Rudbeckia laciniata	Golden Glow	0.40
Rumex orbiculatus	Great Water Dock	1.00
Silphium terebinthinaceum	Prairie Dock	2.00
Solidago riddellii	Riddell's Goldenrod	1.00
Verbena hastata	Blue Vervain	3.00
Vernonia gigantea	Tall Ironweed	1.00
Zizia aurea	Golden Alexander	4.00
	Total Forbs	41.50

Temporary Grass Cover

Scientific Name	Common Name	PLS Oz/Acre
Lolium multiflorum	Annual Ryegrass	112.00
Avena sativa	Seed Oats	320.00
	Total Temp. Grasses	432.00

Basic Tall Grass Prairie Seed Mix
from
Native Connections
17080 Hoshel Road
Three Rivers, MI 49093
info@nativeconnections.net
269.580.4764

Seeding Rate: 31.75 pounds per acre
4.5 pounds grass; 2.25 pounds forbs; 25 pounds nurse crop
41 native seeds per square foot
0.31 acres requires 9.84 pounds total

Grasses

Scientific Name	Common Name	PLS Oz/Acre
Andropogon gerardii	Big Bluestem	8.00
Bouteloua curtipendula	Side-oats Grama	10.00
Elymus canadensis	Canada Wild Rye	20.00
Panicum virgatum	Switchgrass	12.00
Schizachyrium scoparium	Little Bluestem	14.00
Sorghastrum nutans	Indian Grass	8.00
	Total Grasses	72.00

Forbs

Scientific Name	Common Name	PLS Oz/Acre
Asclepias syriaca	Common Milkweed	0.50
Aster sagittifolius	Arrow-leaved Aser	0.40
Astragalus canadensis	Canadian Milk Vetch	1.00
Cassia fasciculata	Partridge Pea	6.00
Coreopsis lanceolata	Lance-leaf Coreopsis	4.50
Echinacea purpurea	Purple Coneflower	4.50
Helianthus maximillianius	Maximillian's Sunflower	3.50
Heliopsis helianthoides	False Sunflower	4.10
Monarda fistulosa	Wild Bergamot	0.50
Oenothera biennis	Common Evening Primrose	1.00
Penstemon digitalis	Foxglove Beardtongue	1.00
Petalostemum purpureum	Purple Prairie Clover	1.70
Ratibida pinnata	Yellow Coneflower	1.00
Rudbeckia hirta	Black-eyed Susan	4.80
Verbena stricta	Hoary Vervain	1.50
	Total Forbs	36.00

Temporary Grass Cover

Scientific Name	Common Name	PLS Oz/Acre
Lolium multiflorum	Annual Ryegrass	80.00
Avena sativa	Seed Oats	320.00
	Total Temporary Grasses	400.00

Sequence of Construction

1. Hold a pre-construction meeting with all parties involved. Examine the site to ascertain the state and conditions under which the work is to be done and review conditions of all applicable permits.
2. Clear and grub woody vegetation within the limits of the wetland creation area and adjacent wetland to be cleared of invasive species.
3. Survey and stake proposed layout for site construction. Wetland Consultant or Engineer to review contour staking for excavations and fills and review the staking for the creation area.
4. Strip and stockpile topsoil from proposed wetland footprint. Eliminate topsoil from Wetland B to avoid re-introduction of invasive species.
5. Excavate and fill within limits of work to the required sub-grade elevations.
6. Survey and stake site for sub-grade elevations/contours and wetland creation area. Wetland Consultant or Engineer to review and approve the created area of wetland prior to the placement of topsoil. Any adjustments to the acreage of wetland creation shall be decided at this time.
7. Remove any water which may have accumulated in the wetland creation area to prevent soil changes detrimental to the stability of the sub-grade.
8. Place and spread stockpiled topsoil. Finished grades in wetland creation area are subject to approval from the Wetland Consultant.
9. Disk or till topsoil to create irregular finish grade.
10. Immediately following fine grading, the Wetland Consultant or Engineer and Contractor shall meet on-site to jointly examine current site conditions under which the work is to be completed.
11. Stake limits of seeding and provide submittals to Wetland Consultant or Engineer prior to seed placement. Wetland Consultant to approve seed mix and limits of seeding.
12. Immediately following seed staking, install shrubs in the wetland creation area according to specifications and plan details.
13. Upon completion of shrub planting, restore to finish grades any disturbed areas during the planting activities.
14. Immediately following planting, seed the wetland creation area and any disturbed upland areas, including the created wetland upland buffer.
15. Provide straw mulch over seeded areas and apply erosion control blanket on slopes adjacent to existing wetland, wetland creation area, and wetland buffers. Crimp straw mulch into ground or apply tackifier to hold straw in place. Stake erosion control blankets into place.
16. Contractor to provide as-built drawings to the Wetland Consultant, Engineer, and/or Owner.
17. Meet with Wetland Consultant to review the newly created wetland, and obtain a copy of the as-built drawings.
18. Remove soil erosion control measures if approved by Wetland Consultant and provide site clean-up.

Planting and Seeding Specifications

General Notes

1. Plants shall comply with the recommendations and requirements of ANSI Z60.1, "American Standard Nursery Stock." Plants shall be healthy, vigorous stock, grown in a recognized nursery in accordance with good horticultural practice and free of disease, insects, eggs, larvae, and defects such as knots, sunscald, injuries, abrasions, or disfigurement.
2. Planting shall be done by a single Contractor specializing and experienced in landscape work.
3. Shrub delivery shall be the same day as planting. No plants shall be stored at the site without permission of the Wetland Consultant or Site Manager. Plants shall be carefully loaded and unloaded so as not to damage branching or root mass. Dropping of material will not be allowed. Plants in full leaf shall be thoroughly wetted down and completely covered with a wet tarp during transportation. All plant roots must be kept in a moist condition.
4. Plant material shall be the size and true native genus and species shown and scheduled on the drawings. No hybrids or cultivars will be accepted.
5. All plants shall be labeled with securely attached waterproof tag bearing legible designation of botanical and common name. See submittals for requirements of native seed.
6. Mulch shall be shredded hardwood bark, mulch free from deleterious materials, sticks, twigs, etc. and suitable for top dressing of trees, shrubs, and planting beds.
7. Warranty Period shall be at the end of the first full growing season. A full growing season is defined as the beginning of May through the end of October of the same year. If installation occurs after June 15, the warranty period shall be extended through the end of October the next year so as to achieve a full growing season.

Planting

1. Contractor shall notify Wetland Consultant, minimum of three business days, prior to planting to assist in the layout of the woody plant material and provide a copy of plant material order and receipt.
2. Complete all woody plantings between March 1 – June 15 or October 1 – November 30 or when plants are dormant or soil is not frozen.
3. All shrubs to be planted as shown on plans and details.
4. Warranty shall include a 95% survival rate for each species. Replace all plants in accordance with specifications.
5. Plant maintenance shall begin immediately after each plant is installed and shall continue as required until the end of the warranty period. Maintenance will include watering and cultivation.

Seeding

1. Install seed immediately following shrub planting.
2. Install seed between the dates of May 1 through June 15 or October 1 through November 30 or as conditions permit. If seeding occurs between June 15 through October 1, the Contractor is responsible for adequately watering the mitigation sites on a consistent basis for seed germination and establishment. Contractor shall notify the Wetland Consultant for the timing of seed installation.
3. Uniformly broadcast specified seed over the specified areas at the specified rates. Provide a carrier (silica sand or other approved material) to ensure uniform distribution of seed.
4. Immediately following seeding, apply straw mulch at the rate of 1.5 tons per acre over all seeded areas.
5. Warranty shall be 95% cover of seeded areas at the end of the first growing season.

Submittals

Contractor shall provide to the Wetland Consultant the following submittals:
- Wetland Seed Mix
- Basic Tallgrass Prairie Seed Mix
- Woody Plant Material order and receipt

Grading Specifications

General Notes

1. Upon issuance, all work shall comply with the Township permit and other issued permits.
2. The contractor is responsible for supplying all materials, labor, equipment, transportation, all services incidental to clearing, grading, seeding, soil stabilization, and clean up of the mitigation areas.
3. Erosion controls are to be installed to the limits indicated on the plan and to the detail provided. Any damage to the existing wetlands not indicated on the plans shall be repaired immediately, with these areas being restored to their original character at the Contractor's own expense. All pre-erosion control measures shall be removed after final acceptance of work, unless suggested by the Wetland Consultant to remain in place. Care shall be taken during removal to minimize the loss of the accumulated sediment. If necessary, all silt and sediment is to be immediately removed from adjacent wetland or water courses.
4. All trash and debris shall be removed from the site and legally disposed of upon completion of grading activities. Repair to original character any areas outside the official work limits accidentally damaged by earthwork activities. Repair shall include finish grading and seeding as required to match existing grade and conditions, and maintenance of repaired areas.

Earthwork

1. Sub-grades in created wetland shall be six inches lower than proposed finished grade contours and spot elevations to allow for the placement of topsoil. Topsoil shall be the top six inches of soil from the wetland creation footprint.
2. Unless indicated otherwise, grade evenly between points and contours or between such points or contours and existing grades, refer to grading detail. Acceptable grade tolerance shall not exceed three inches (0.25 feet) from proposed grades specified on the plans to accommodate minor ruts, dirt clumps, organic matter and the like. Wetland Consultant may adjust in-field based on site conditions to accommodate the intent of the wetland creation. Care shall be taken to not excavate below the depths indicated. Contractor shall be responsible for any unauthorized excavation and/or fill operations. Notify Wetland Consultant a minimum of three business days in advance for sub-grade verification.
3. Wetland Consultant may determine during sub-grade verification that existing sub-soils are too water permeable to accommodate the intent of the wetland creation. If this is determined, Contractor shall either compact native sub-soils to a degree sufficient to inhibit water percolation or excavate an additional six inches of sub-soils and back fill with clean compacted clay soils, as directed by Wetland Consultant.
4. Remove water accumulation in excavation area (if required) to prevent soil changes detrimental to the stability of the sub-grade. Provide and maintain erosion control measures and sufficient dewatering devices such as pumps, hoses, strainers and other appurtenance required to convey the water from excavations. Water shall be discharged at an upland location a sufficient distance from the excavations to prevent backflow. Care shall be taken to prevent water borne silt from dewatering operations from entering existing wetlands and watercourses.
5. Surplus excavated material or material unsuitable for landfill cover or for filling or grading operations (including all wetland excavation material) shall be disposed of in an upland location on the Owner's property as designated by the Site Manager. Stockpiled excess material shall be graded and stabilized to prevent erosion into existing wetland or watercourse.
6. Place and spread the approved topsoil at a minimum depth of six inches over the entire wetland creation area, see grading detail. Topsoil shall be spread roughly such that minor ruts, dirt clumps and organic matter are acceptable. Topsoil compaction during spreading operations shall occur only to the degree that shall prevent settlement beyond specified grade tolerance. Avoid over compacting beyond that provided by the spreading equipment. Over compacted topsoil shall be thoroughly loosened by scarifying or plowing to a depth of six inches. Notify Wetland Consultant a minimum three business days in advance for final acceptance of the finished grades.

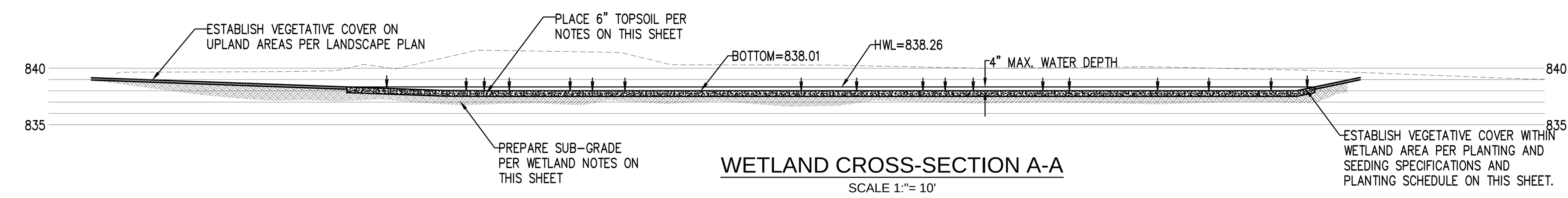

WETLAND CROSS-SECTION A-A
SCALE 1:"= 10'

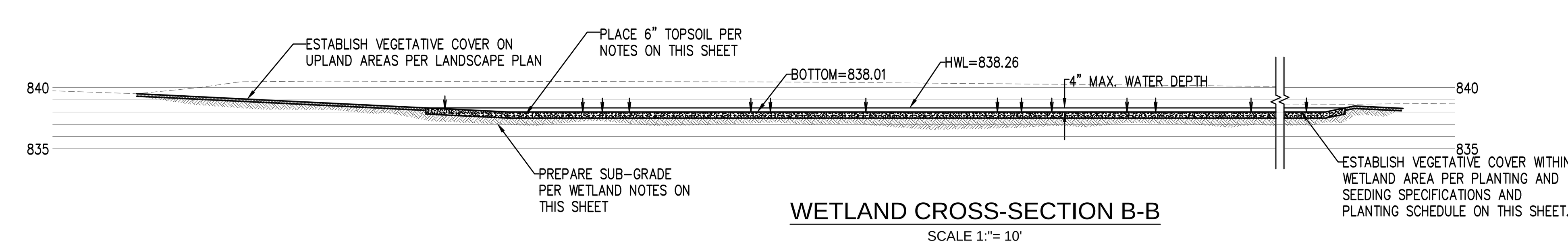

WETLAND CROSS-SECTION B-B
SCALE 1:"= 10'

WETLAND MITIGATION

ARBOR FARMS PHASE 2
CONSTRUCTION PLANS
PART OF THE NORTHWEST 1/4 OF SECTION 26, T.3S., R.6E., PITTSFIELD TOWNSHIP, WASHTENAW COUNTY, MICHIGAN

APPLICANT
PITTSFIELD LAND LLC
23370 COMMERCE DRIVE
FARMINGTON HILLS, MI 48335
248-921-3996
ATTN: JEFF KATZEN

DATE: 07-10-2019
PM: GMS
ENG: GMS
SURV: AEC
CAD: ADB
\DWG\9525.dwg
VDATUM:U.S.C. & G.S.
SCALE: 1" = 20'

JOB NO. 9525.4.18

STATUS:
REVISIONS
08-27-19 PER TWSP. & WCWRC
10-02-19 PER TWP ENG REVIEW LETTER
10-10-19 PER TWP ENG REVIEW LETTER
10-28-19 PER TWP ENG REVIEW LETTER

ENGINEERS. SURVEYORS
MLP AND ASSOCIATES, INC.
Michael L. Priest & Associates, Inc.
40655 Koppernick Road, Canton, MI 48187
phone: (734) 459-8560
fax: (734) 459-2585

SHEET
23

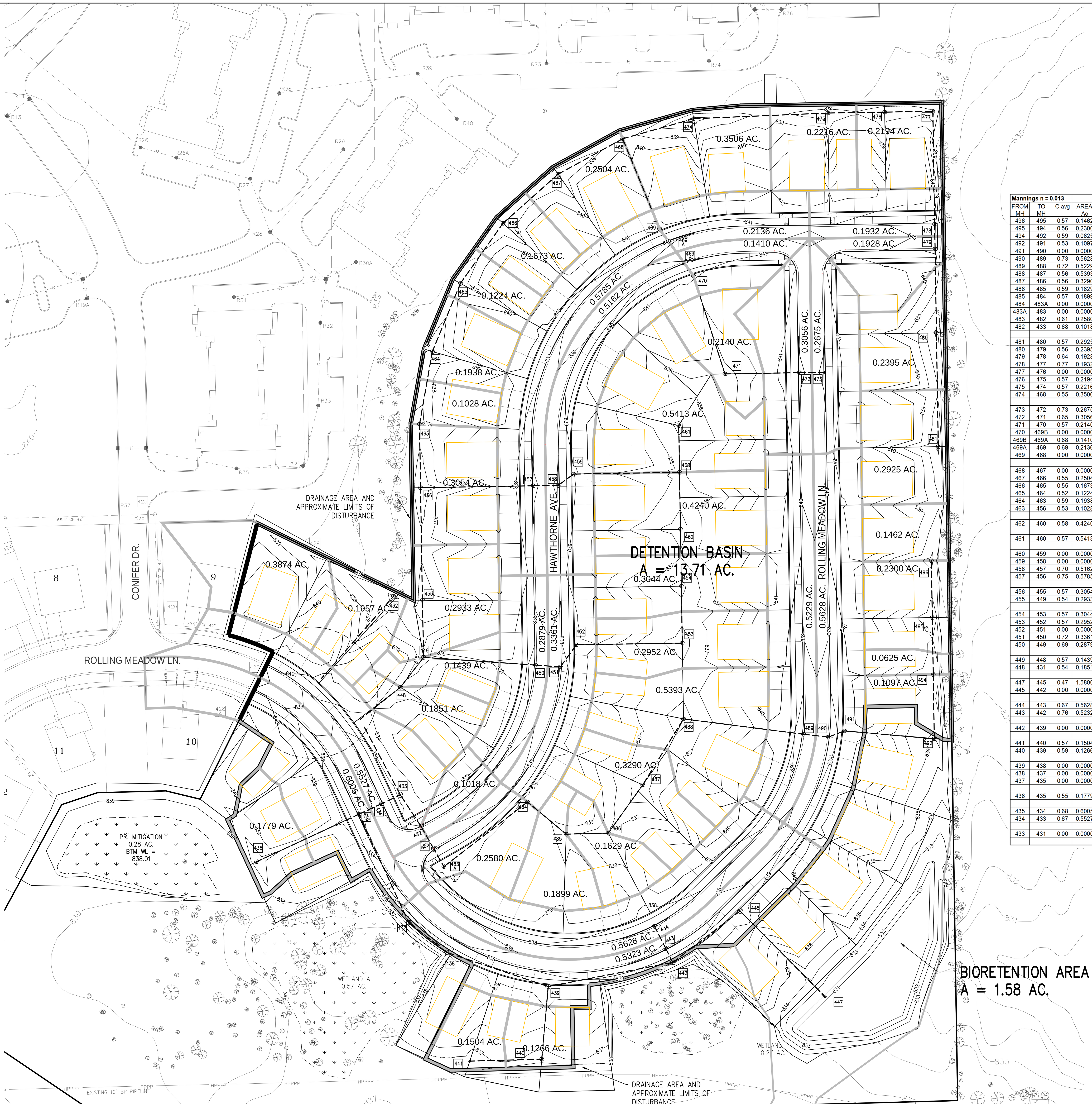

60 30 0 60 120 180
SCALE IN FEET 1"=60'

FROM MH	TO MH	C avg	AREA Ac	TOTAL AREA	A*C	TOTAL A*C	T min	I in/hr	Q=CIA cfs	Q FULL cfs	PIPE dia	RUN ft	HG SLOPE	FALL in HG	UPST HG ELEV	DWNST HG ELEV	V AVG fps	V FULL fps	T to DS MH	PIPE SLOPE	UPST INV ELEV	DWNST INV ELEV	UPST RIM	UPST RIM TO INV	UPST CVR	DWNST CVR	UPST RIM TO HG	CROWN OF PIPE	HG TO CROWN
Mannings n = 0.013																													
496	495	0.57	0.1462	0.1462	0.0833	0.0833	20.00	3.89	0.32	2.36	12	65.0	0.01%	0.01	834.45	834.16	0.41	3.01	2.63	0.44%	833.65	833.36	836.81	3.16	1.99	1.98	2.36	834.65	-0.20
495	494	0.56	0.2300	0.3762	0.1288	0.2121	22.63	3.67	0.78	2.36	12	65.0	0.05%	0.03	834.16	833.88	0.99	3.01	1.09	0.44%	833.36	833.08	836.51	3.15	1.98	1.95	2.35	834.36	-0.20
494	492	0.59	0.0625	0.4387	0.0369	0.2490	23.72	3.59	0.89	2.36	12	73.4	0.06%	0.05	833.88	833.56	1.14	3.01	1.07	0.44%	833.08	832.76	836.19	3.11	1.95	1.93	2.31	834.08	-0.20
492	491	0.53	0.1097	0.5484	0.0581	0.3072	24.79	3.51	1.08	2.36	12	102.9	0.09%	0.09	833.56	833.10	1.37	3.01	1.25	0.44%	832.76	832.30	835.85	3.09	1.93	5.80	2.29	833.76	-0.20
491	490	0.00	0.0000	0.5484	0.0000	0.3072	26.04	3.43	1.05	2.36	12	19.9	0.09%	0.02	833.10	833.02	1.34	3.01	0.25	0.44%	832.30	832.21	839.27	6.97	5.80	4.83	6.17	833.30	-0.20
490	489	0.73	0.5628	1.1112	0.4108	0.7180	26.29	3.41	2.45	2.36	12	28.5	0.47%	0.13	833.02	832.89	3.12	3.01	0.15	0.44%	832.21	832.09	838.21	6.00	4.83	4.94	5.19	833.21	-0.19
489	488	0.72	0.5229	1.6341	0.3765	1.0945	26.44	3.40	3.72	3.77	15	138.1	0.33%	0.46	832.89	832.42	3.03	3.07	0.76	0.34%	831.89	831.42	838.20	6.31	4.87	2.72	5.31	833.14	-0.25
488	487	0.56	0.5393	2.1734	0.3020	1.3965	27.20	3.35	4.68	5.36	18	88.6	0.20%	0.18	832.42	832.19	2.65	3.03	0.56	0.26%	831.22	830.99	835.58	4.36	2.65	2.66	3.16	832.72	-0.30
487	486	0.56	0.3290	2.5024	0.1842	1.5807	27.75	3.32	5.24	5.36	18	67.7	0.25%	0.17	832.19	832.01	2.97	3.03	0.38	0.26%	830.99	830.81	835.36	4.37	2.66	4.62	3.17	832.49	-0.30
486	485	0.59	0.1629	2.6653	0.0961	1.6768	28.13	3.29	5.52	7.26	21	48.1	0.12%	0.06	832.01	831.91	2.30	3.02	0.35	0.21%	830.61	830.51	837.14	6.53	4.55	5.74	5.13	832.36	-0.35
485	484	0.57	0.1899	2.8552	0.1082	1.7851	28.48	3.27	5.84	7.26	21	57.6	0.14%	0.08	831.91	831.79	2.43	3.02	0.40	0.21%	830.51	830.39	838.23	7.72	5.74	6.76	6.32	832.26	-0.35
484	483A	0.00	0.0000	2.8552	0.0000	1.7851	28.88	3.25	5.80	7.26	21	120.7	0.13%	0.16	831.79	831.54	2.41	3.02	0.83	0.21%	830.39	830.14	839.13	8.74	6.76	6.63	7.34	832.14	-0.35
483A	483	0.00	0.0000	2.8552	0.0000	1.7851	29.71	3.20	5.71	7.26	21	23.5	0.13%	0.03	831.54	831.49	2.37	3.02	0.16	0.21%	830.14	830.09	838.75	8.61	6.63	5.38	7.21	831.89	-0.35
483	482	0.61	0.2580	3.1132	0.1574	1.9425	29.88	3.19	6.19	7.26	21	28.5	0.15%	0.04	831.49	831.43	2.58	3.02	0.18	0.21%	830.09	830.03	837.45	7.36	5.38	5.44	5.96	831.84	-0.35
482	433	0.68	0.1018	3.2150	0.0692	2.0117	30.06	3.18	6.39	7.26	21	43.8	0.16%	0.07	829.95	829.86	2.66	3.02	0.27	0.21%	828.55	828.46	837.45	8.90	6.92	7.73	7.50	830.30	-0.35
							30.34																						
481	480	0.57	0.2925	0.2925	0.1667	0.1667	20.00	3.89	0.65	2.36	12	130.0	0.03%	0.04	834.14	833.57	0.83	3.01	2.62	0.44%	833.34	832.77	836.82	3.48	2.32	2.89	2.68	834.34	-0.20
480	479	0.56	0.2395	0.5320	0.1341	0.3008	22.62	3.67	1.11	2.36	12	95.8	0.10%	0.09	833.57	833.14	1.41	3.01	1.13	0.44%	832.77	832.34	836.82	4.05	2.89	5.86	3.25	833.77	-0.20
479	478	0.64	0.1928	0.7248	0.1234	0.4242	23.76	3.59	1.52	2.36	12	28.5	0.18%	0.05	833.14	833.02	1.94	3.01	0.25	0.44%	832.34	832.22	839.37	7.03	5.86	5.98	6.23	833.34	-0.20
478	477	0.77	0.1932	0.9180	0.1488	0.5730	24.00	3.57	2.05	2.36	12	128.8	0.33%	0.42	833.02	832.45	2.61	3.01	0.82	0.44%	832.22	831.65	839.37	7.15	5.98	5.14	6.35	833.22	-0.20
477	476	0.00	0.0000	0.9180	0.0000	0.5730	24.83	3.51	2.01	2.36	12	55.0	0.32%	0.18	832.45	832.21	2.56	3.01	0.36	0.44%	831.65	831.41	837.96	6.31	5.14	4.36	5.51	832.65	-0.20
476	475	0.57	0.2194	1.1374	0.1251	0.6981	25.19	3.49	2.43	3.77	15	65.0	0.14%	0.09	832.21	831.99	1.98	3.07	0.55	0.34%	831.21	830.99	836.94	5.73	4.29	4.69	4.73	832.46	-0.25
475	474	0.57	0.2216	1.3590	0.1263	0.8244	25.73	3.45	2.84	3.77	15	153.4	0.19%	0.30	831.99	831.47	2.32	3.07	1.10	0.34%	830.99	830.47	837.12	6.13	4.69	4.74	5.13	832.24	-0.25
474	468	0.55	0.3506	1.7096	0.1928	1.0172	26.84	3.38	3.43	3.77	15	84.2	0.28%	0.24	831.47	831.23	2.80	3.07	0.50	0.34%	830.47	830.18	836.65	6.18	4.74	7.93	5.18	831.72	-0.25
							27.34																						
473	472	0.73	0.2675	0.2675	0.1953	0.1953	20.00	3.89	0.76	2.36	12	28.5	0.05%	0.01	836.04	835.91	0.97	3.01	0.49	0.44%	835.24	835.11	839.83	4.59	3.42	3.55	3.79	836.24	-0.20
472	471	0.65	0.3056	0.5731	0.1986	0.3939	20.49	3.85	1.52	2.36	12	85.1	0.18%	0.15	835.81	835.44	1.93	3.01	0.74	0.44%	835.01	834.64	839.83	4.82	3.65	3.71	4.02	836.01	-0.20
471	470	0.57	0.2140	0.7871	0.1220	0.5159	21.23	3.79	1.95	2.36	12	117.5	0.30%	0.35	835.34	834.82	2.49	3.01	0.79	0.44%	834.54	834.02	839.52	4.98	3.81	5.74	4.18	835.54	-0.20
470	469B	0.00	0.0000	0.7871	0.0000	0.5159	22.01	3.72	1.92	2.36	12	18.6	0.29%	0.05	834.72	834.64	2.45	3.01	0.13	0.44%	833.92	833.84	840.93	7.01	5.84	4.85	6.21	834.92	-0.20
469B	469A	0.68	0.1410	0.9281	0.0959	0.6118	22.14	3.71	2.27	2.36	12	29.5	0.41%	0.12	834.44	834.31	2.89	3.01	0.17	0.44%	833.64	833.51	839.86	6.22	5.05	5.15	5.42	834.64	-0.20
469A	469	0.69	0.2136	1.1417	0.1474	0.7592	22.31	3.70	2.81	3.77	15	18.3	0.19%	0.03	834.21	834.15	2.29	3.07	0.13	0.34%	833.21	833.15	839.83	6.62	5.18	6.23	5.62	834.46	-0.25
469	468	0.00	0.0000	1.1417	0.0000	0.7592	22.44	3.69	2.80	3.77	15	111.0	0.19%	0.21	831.56	831.23	2.28	3.07	0.81	0.34%	830.56	830.18	840.82	10.26	8.82	7.93	9.26	831.81	-0.25
							23.25																						
468	467	0.00	0.0000	2.8513	0.0000	1.7764	27.34	3.34	5.94	5.36	18	84.2	0.32%	0.27	831.23	830.96	3.36	3.03	0.42	0.26%	829.98	829.76	839.55	9.57	7.86	6.39	8.32	831.48	-0.25
467	466	0.55	0.2504	3.1017	0.1377	1.9141	27.75	3.32	6.35	7.26	21	84.2	0.16%	0.14	830.96	830.79	2.64	3.02	0.53	0.21%	829.56	829.39	837.86	8.30	6.32	6.50	6.90	831.31	-0.35
466	465	0.55	0.1673	3.2690	0.0920	2.0061	28.29	3.28	6.59	7.26	21	84.2	0.17%	0.15	830.79	830.61	2.74	3.02	0.51	0.21%	829.39	829.21	837.86	8.47	6.50	7.09	7.07	831.14	-0.35
465	464	0.52	0.1224	3.3914	0.0636	2.0697	28.80	3.25	6.73	7.26	21	84.2	0.18%	0.15	830.61	830.43	2.80	3.02	0.50	0.21%	829.21	829.03	838.28	9.07	7.09	5.88	7.67	830.96	-0.35
464	463	0.59	0.1938	3.5852	0.1143	2.1841	29.30	3.22	7.04	7.26	21	84.3	0.20%	0.17	830.43	830.26	2.93	3.02	0.48	0.21%	829.03	828.86	836.89	7.86	5.88	5.71	6.46	830.78	-0.35
463	456	0.53	0.1028	3.6880	0.0545	2.2386	29.78	3.19	7.15	7.26	21	72.5	0.20%	0.15	830.26	830.10	2.97	3.02	0.41	0.21%	828.86	828.70	836.54	7.68	5.71	4.41	6.28	830.61	-0.35
							30.19																						
462	460	0.58	0.4240	0.4240	0.2459	0.2459	20.00	3.89	0.96	2.36	12	65.0	0.07%	0.05	834.17	833.89	1.22	3.01	0.89	0.44%	833.37	833.09	836.55	3.18	2.01	3.59	2.38	834.37	-0.20
							20.89																						
461	460	0.57	0.5413	0.5413	0.3085	0.3085	20.00	3.89	1.20	2.36	12	53.5	0.11%	0.06	834.12	833.89	1.53	3.01	0.58	0.44%	833.32	833.09	836.78	3.46	2.29	3.59	2.66	834.32	-0.20
							20.58																						
460	459	0.00	0.0000	0.9653	0.0000	0.5545	20.89	3.81	2.11	2.36	12	121.0	0.35%	0.43	833.79	833.26	2.69	3.01	0.75	0.44%	832.99	832.46	837.85	4.86	3.69	5.28	4.06	833.99	-0.20
459	458	0.00	0.0000	0.9653	0.0000	0.5545	21.64	3.75	2.08	2.36	12	21.8	0.34%	0.07	833.16	833.06	2.65	3.01	0.14	0.44%	832.36	832.26	838.90	6.54	5.38	4.38	5.74	833.36	-0.20
458	457	0.70	0.5162	1.4815	0.3613	0.9158	21.78	3.74	3.43	3.77	15	28.5	0.28%	0.08	833.06	832.96	2.79	3.07	0.17	0.34%	832.06	831.96	837.81	5.75	4.31	4.41	4.75	833.31	-0.25
457	456	0.75	0.5785	2.0600	0.4339	1.3497	21.95	3.73	5.03	7.26	21	128.8	0.10%	0.13	830.37	830.10	2.09	3.02	1.03	0.21%	828.97	828.70	837.81	8.84	6.86	4.41	7.44	830.72	-0.35
							22.97																						
456	455	0.57	0.3054	6.0534	0.1741	3.7623	30.19	3.17	11.93	14.79	30	128.3	0.08%	0.11	830.10	829.94	2.43	3.01	0.88	0.13%	828.10	827.94	835.09	6.99	4.20	4.36	4.99	830.60	-0.50
455	449	0.54	0.2933	6.3467	0.1584	3.9207	31.07	3.12	12.24	14.79	30	65.5	0.09%	0.06	829.94	829.85	2.49	3.01	0.44	0.13%	827.94	827.85	835.09	7.15	4.36	6.71	5.15	830.44	-0.50
							31.50																						
454	453	0.57	0.3044	0.3044	0.1735	0.1735	20.00	3.89	0.67	2.36	12	65.0	0.04%	0.02	833.24	832.95	0.86	3.01	1.26	0.44%	832.44	832.15	835.72	3.28	2.12	2.26	2.48	833.44	-0.20
453	452	0.57	0.2952	0.5996	0.1683	0.3418	21.26	3.78	1.29	2.36	12	121.0	0.13%	0.16	832.95	832.42	1.65	3.01	1.23	0.44%	832.15	831.62	835.58	3.43	2.26	5.74	2.63	833.15	-0.20
452	451	0.00	0.0000	0.5996	0.0000	0.3418	22.49	3.69	1.26	2.36	12	31.1	0.12%	0.04	832.42	832.28	1.60	3.01	0.32	0.44%	831.62	831.48	838.53	6.91	5.74	4.65	6.11	832.62	-0.20
451	450	0.72	0.3361	0.9357	0.2420	0.5838	22.81	3.66	2.14	2.36	12	28.5	0.36%	0.10	832.28	832.16	2.72	3.01	0.17	0.44%	831.48	831.36	837.30	5.82	4.65	4.78	5.02	832.48	-0.20
450	449	0.69	0.2879	1.2236	0.1987	0.7824	22.98	3.65	2.85	3.77	15	128.1	0.20%	0.25	830.29	829.85	2.33	3.07	0.92	0.34%	829.29	828.85	837.30	8.01	6.58	7.06	7.01	830.54	-0.25
							23.90																						
449	448	0.57	0.1439	7.7142	0.0820	4.7851	31.50	3.10	14.82	14.79	30	43.1	0.13%	0.06	829.85	829.79	3.02	3.01	0.24	0.13%	827.85	827.79	837.35	9.50	6.71	7.62	7.50	830.35	-0.50
448	431	0.54	0.1851	7.8993	0.1000	4.8851	31.74	3.08	15.07	22.12	36	58.9	0.05%	0.03	829.79	829.73	2.13	3.13	0.46	0.11%	827.39	827.33	838.21	10.82	7.48	8.05	8.42	830.39	-0.60
							32.20																						
447	445	0.47	1.5800	1.5800	0.7426	0.7426	20.00	3.89	2.89	3.77	15	142.0	0.20%	0.28	833.59	833.10	2.35	3.07	1.01	0.34%	832.59	832.10						833.84	
445	442	0.00	0.0000	1.5800	0.0000	0.7426	21.01	3.80	2.82	3.77	15	96.5	0.19%	0.18	833.10	832.77	2.30	3.07	0.70	0.34%	832.10	831.77	838.68	6.58	5.14	4.06	5.58	833.35	-0.25
							21.70																						
444	443	0.67	0.5628	0.5628	0.3771	0.3771	20.00	3.89	1.47	3.56	12	28.5	0.17%	0.05	833.12	832.83	1.87	4.54	0.25	1.00%	832.32	832.03	836.80	4.48	3.31	3.62	3.68	833.32	-0.20
443	442	0.76	0.5232	1.0860	0.3976	0.7747	20.25	3.87	3.00	3.77	15	17.8	0.22%	0.04	832.83	832.77	2.44	3.07	0.12	0.34%	831.83	831.77	836.82	4.99	3.55	4.06	3.99	833.08	-0.25
							20.38																						
442	439	0.00	0.0000	2.6660	0.0000	1.5173	21.70	3.75	5.69	7.26	21	145.0	0.13%	0.19	832.77	832.47	2.36	3.02	1.02	0.21%	831.37	831.07	837.27	5.90	3.92	5.40	4.50	833.12	-0.35
							22.73																						
441	440	0.57	0.1504	0.1504	0.0857	0.0857	20.00	3.89	0.33	2.36	12	82.2	0.01%	0.01	833.30	832.94	0.42	3.01	3.23	0.44%	832.50	832.14	836.50	4.00	2.84	3.20	3.20	833.50	-0.20
440	439	0.59	0.1266	0.2770	0.0747	0.1604	23.23	3.63	0.58	2.36	12	83.3	0.03%	0.02	832.84	832.47	0.74	3.01	1.87	0.44%	832.04	831.67	836.50	4.46	3.30	5.61	3.66	833.04	-0.20
							25.10																						
439	438	0.00	0.0000	2.9430	0.0000	1.6777	25.10	3.49	5.86	7.26	21	122.4	0.14%	0.17	832.47	832.21	2.44	3.02	0.84	0.21%	831.07	830.81	838.45	7.38	5.40	5.66	5.98	832.82	-0.35
438	437	0.00	0.0000	2.9430	0.0000	1.6777	25.94	3.44	5.76	7.26	21	55.1	0.13%	0.07	832.21	832.10	2.40	3.02	0.38	0.21%	830.81	830.70	838.45	7.64	5.66	5.96	6.24	832.56	-0.35
437	435	0.00	0.0000	2.9430	0.0000	1.6777	26.32	3.41	5.72	7.26	21	136.2	0.13%	0.18	832.10	831.81	2.38	3.02	0.95	0.21%	830.70	830.41	838.64	7.94	5.96	4.38	6.54	832.45	-0.35
							27.28																						
436	435	0.55	0.1779	0.1779	0.0978	0.0978	20.00	3.89	0.38	2.52	12	128.8	0.01%	0.01	833.29	832.64	0.48	3.21	4.43	0.50%	832.49	831.84	837.38	4.89	3.73	3.76	4.09	833.49	-0.20
							24.43																						
435	434	0.68	0.6005	3.7214	0.4083	2.1839	27.28	3.35	7.31	9.60	24	28.5	0.10%	0.03	831.81	831.76	2.33	3.06	0.20	0.18%	830.21	830.16	836.77	6.56	4.31	4.36	4.96	832.21	-0.40
434	433	0.67	0.5527	4.2741	0.3703	2.5542	27.48	3.33	8.52	9.60	24	23.8	0.14%	0.03	829.90	829.86	2.71	3.06	0.15	0.18%	828.30	828.26	836.77	8.47	6.22	7.66	6.87	830.30	-0.40
							27.63																						
433	431	0.00	0.0000	7.4891	0.0000	4.5659	30.34	3.16	14.44	14.79	30	97.7	0.12%	0.12	829.86	829.73	2.94	3.01	0.55	0.13%	827.86	827.73	838.17	10.31	7.52	8.19	8.31	830.36	-0.50
							30.89																						

LEGEND:

PR. STORM
EX. STORM
WETLANDS
STORM DRAINAGE AREA

STORM SEWER CALCULATIONS

ARBOR FARMS PHASE 2

CONSTRUCTION PLANS

PART OF THE NORTHWEST 1/4 OF SECTION 26, T.3S., R.6E., PITTSFIELD TOWNSHIP, WASHTENAW COUNTY, MICHIGAN

APPLICANT
PITTSFIELD LAND LLC
23370 COMMERCE DRIVE
FARMINGTON HILLS, MI 48335
248-921-3996
ATTN: JEFF KATZEN

DATE: 07-10-2019
PM: GMS
ENG: GMS
SURV: AEC
CAD: ADB
\DWG\9525.dwg
VDATUM:U.S.C. & G.S.
SCALE: 1" = 60'

JOB NO. 9525.4.18

STATUS:
REVISIONS
08-27-19 PER TWSP. & WCWRC
10-02-19 PER TWP ENG REVIEW LETTER
10-10-19 PER TWP ENG REVIEW LETTER
10-28-19 PER TWP ENG REVIEW LETTER

ENGINEERS . SURVEYORS
MLP
AND ASSOCIATES, INC.
Michael L. Priest & Associates, Inc.
40655 Koppernick Road, Canton, MI 48187
phone: (734) 459-8560
fax: (734) 459-2585

SHEET
24

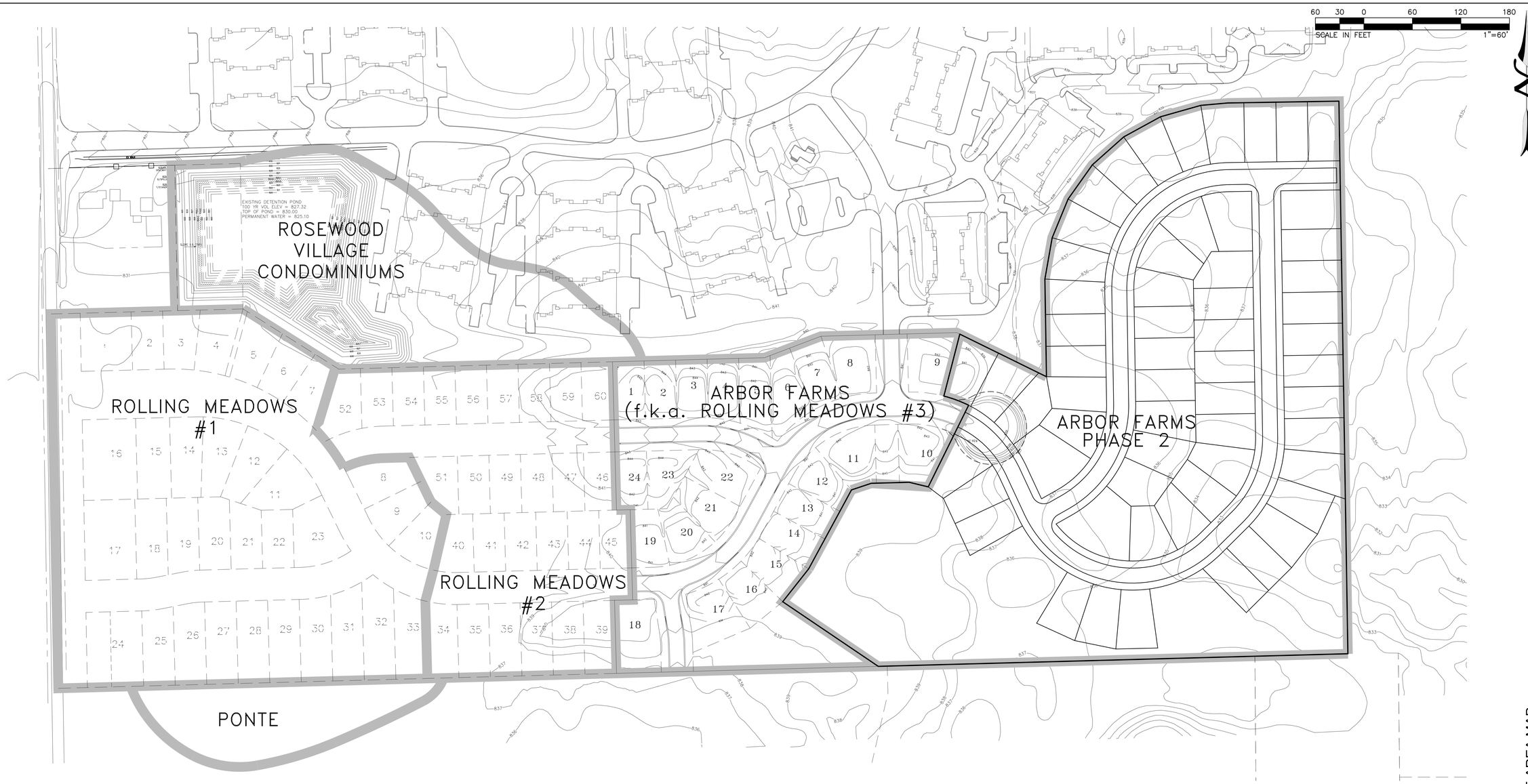

PREVIOUSLY APPROVED POND CALCULATIONS

Detention Pond C Factor Calculation

Provided for in original pond design:

	Area	C	A*C
Rolling Meadows #1 & #2:	18.64	0.35	6.52
Rolling Meadows #3:	3.40	0.35	1.19
Rosewood Village Condominiums:	5.00	0.55	2.75
Ponte Property:	1.70	0.35	0.60
Total:	28.74	0.38	11.06
Without Ponte Property:	27.04	0.39	10.46

Proposed to be provided for in expanded basin:

	Area	C	A*C
Rolling Meadows #3:			
Total area = 8.8224			
3.40 acres already provided for			
Therefore 8.8224 – 3.40 =	5.4224	0.59	3.20
Plus, land acquired for expansion			
of existing detention pond =	0.9642	1.00	0.96
Total:	6.3866	0.59	4.16
Total:	33.4266	0.44	14.63

Volume Required:

1. Determine maximum allowable outflow, Qa, in CFS

A				Qa
6.3866 ac	X	0.15 cfs/ac (R.M. #3)	=	0.958 cfs
27.04 ac	X	0.20 cfs/ac (R.M. #1 & #2)	=	5.408 cfs
				6.366 cfs

2. Calculate the allowable outflow, Qo = Qa/(acreage)(runoff coefficient)

Qa		A		C		
6.366 cfs	/	33.4266 ac	X	0.44	=	0.435 cfs/ac–imp

3. Calculate time for peak storage, T100

T100 = –25+(10312.5/Qo)^1/2 = 128.933 min

4. Calculate the maximum storage volume per ac–imp, Vs

Vs = 16500T/(T+25)–400QoT = 11,576 ft^3/ac–im

5. Calculate the total volume of storage required, Vt

Vt(100) = (Vs)(#ac)(runoff coefficient) = 169,323 ft^3

6. Calculate the first flush volume

Vff = 1815*A*C = 26,549 ft^3

7. Calculate the volume required in the Sediment Forebay

Vsf = 5% of 100 year volume = 8,466 ft^3

8. Calculate the volume of the bankfull flood

V bf = 8170 A C = 119,506 ft^3

Volume Provided:

ELEV	AREA (ft^2)	h (ft)	VOLUME (ft^3)	VOLUME (ft^3)	REMARKS
SEDIMENT FOREBAY					
825.10	4,945			0	
		0.90	5,245		
826.00	6,711			5,245	Permanent Water
		0.45	3,221		
826.45	7,700			8,466	5% of 100 Year Storm
		0.55	4,597		
827.00	8,924			13,063	
		1.00	10,100		
828.00	11,328			23,162	
MAIN DETENTION BASIN					
825.10	69,972			0	Permanent Water
		0.37	26,549		
825.47	72,020			26,549	First Flush
		0.53	38,644		
826.00	74,901			65,193	
		0.71	54,313		
826.71	78,901			119,506	Bankfull Volume
		0.29	23,420		
827.00	80,565			142,926	
		0.32	26,397		
827.32	82,463			169,323	100 Year Volume
		0.68	57,099		
828.00	86,426			226,421	

DETENTION BASIN - OVERALL DRAINAGE AREA MAP

ARBOR FARMS PHASE 2
CONSTRUCTION PLANS
PART OF THE NORTHWEST 1/4 OF SECTION 26, T.3S., R.6E.,
PITTSFIELD TOWNSHIP, WASHTENAW COUNTY, MICHIGAN

ENGINEERS - SURVEYORS
MLP
AND ASSOCIATES, INC.
Michael L. Priest & Associates, Inc.
40655 Koppernick Road, Canton, MI 48187
phone: (734) 459-8560
fax: (734) 459-2585

STATUS:

REVISIONS		
09-27-19	PER TWSP. & WCWRC	LETTER
10-02-19	PER TWP ENG REVIEW	LETTER
10-18-19	PER TWP ENG REVIEW	LETTER
10-28-19	PER TWP ENG REVIEW	LETTER

JOB NO. 9525.4.18

DATE: 07-10-2019
PM: GMS
PLANNER: GMS
SURV: AEC
CAD: AGB
\DWG\9525.dwg
XCAT:M\U.S.C. & G.S.
SCALE: 1" = 100'

APPLICANT
PITTSFIELD LAND LLC
23370 COMMERCE DRIVE
FARMINGTON HILLS, MI 48335
248-921-3996
ATTN: JEFF KATZEN

SHEET
25

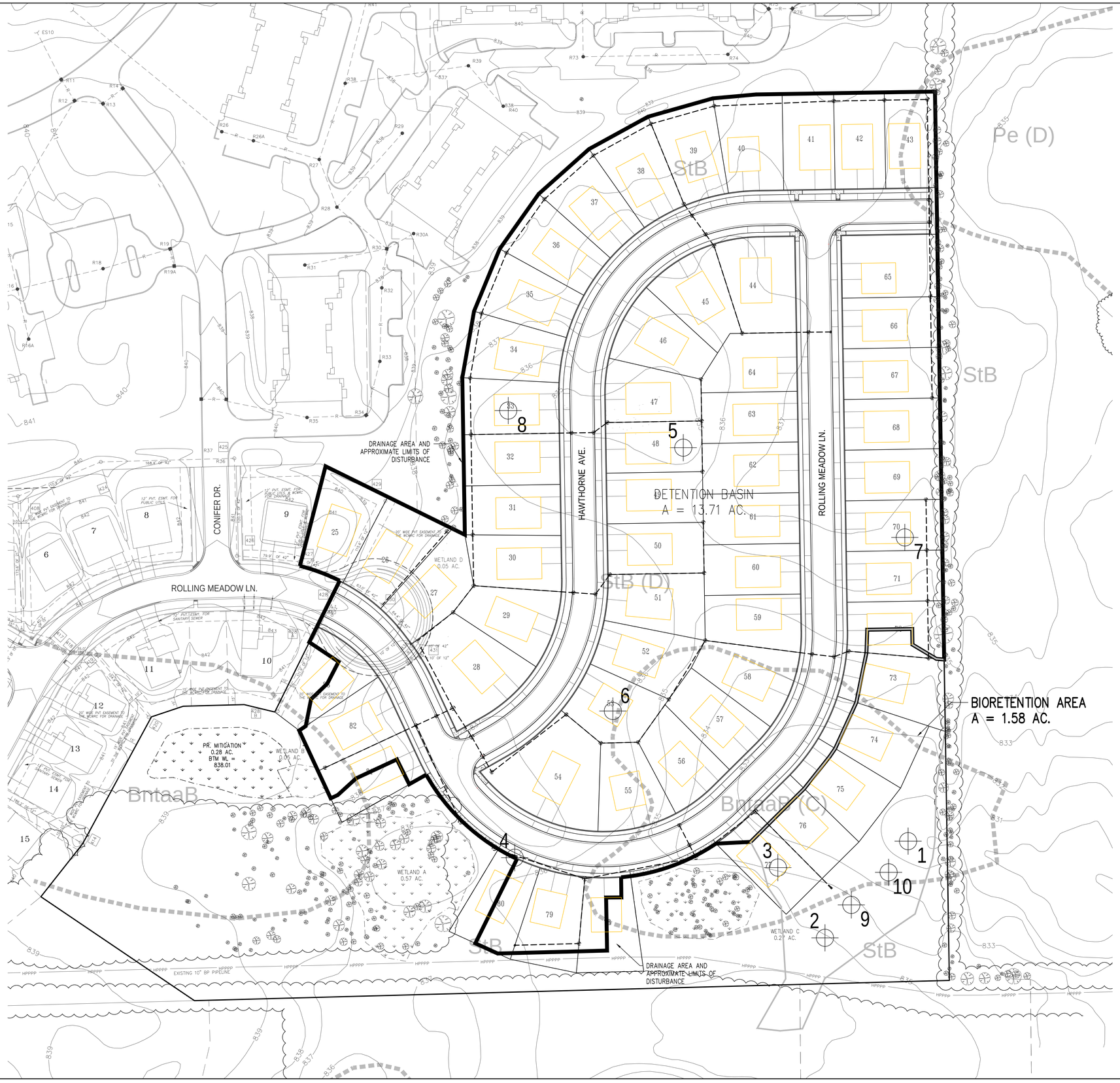

MAINTENANCE TASKS AND SCHEDULE DURING CONSTRUCTION							
	SYSTEM COMPONENT						
TASKS	Catch Basins, Inlets, & Storm Sewers	Ditches & Swales	Basin Inlets, Outlets & Grates	Outlet Control Structure	Bioretention Basin	Storm Detention Area	Schedule
Inspect for sediment accumulation	X	X	X	X	X	X	Weekly
Removal of sediment accumulation	X	X	X	X	X	X	As needed and prior to turnover
Inspect for floatables and debris			X	X	X	X	Quarterly and at turnover
Cleaning of floatables and debris			X	X	X	X	Quarterly and at turnover
Inspection for erosion		X		X	X	X	Weekly
Re-establish permanent vegetation on eroded slopes		X		X	X	X	As needed & at turnover
Replacement of Stone				X			As needed and prior to turnover
Mowing		X			X	X	0 to 2 times per year
Inspect all components during wet weather & compare to construction plans		X		X	X	X	Annually and at tornover
Make adjustments or replacements as determined by annual wet weather inspection	X	X	X	X	X	X	As needed
Note: No chemicals are allowed in stormwater features or buffer zones with the following exception: invasive species may be treated with chemicals by a certified applicator.							

PERMANENT MAINTENANCE TASKS AND SCHEDULE							
	SYSTEM COMPONENT						
TASKS	Catch Basins, Inlets, & Storm Sewers	Ditches & Swales	Basin Inlets, Outlets & Grates	Outlet Control Structure	Bioretention Basin	Storm Detention Area	Schedule
Inspect for sediment accumulation	X	X	X	X	X	X	Annually
Removal of sediment accumulation	X	X	X	X	X	X	Every 2 years as needed
Inspect for floatables and debris	X	X	X	X	X	X	Annually
Cleaning of floatables and debris	X	X	X	X	X	X	Annually
Inspection for erosion		X		X	X	X	Annually
Re-establish permanent vegetation on eroded slopes		X			X	X	As needed
Replacement of Stone				X			Every 3-5 years as needed
Mowing		X			X	X	0 to 2 times per year
Inspect all components during wet weather & compare to construction plans		X		X	X	X	Annually
Inspection of bioretention basin					X		Following storms of 1" or more
Make adjustments or replacements as determined by annual wet weather inspection	X	X	X	X	X	X	As needed
Keep records of all inspections and maintenance activities							Annually
Keep records of all costs for inspections, maintenance and repairs							Annually
Note: No chemicals are allowed in stormwater features or buffer zones with the following exception: invasive species may be treated with chemicals by a certified applicator.							

STORM WATER MANAGEMENT SYSTEM ANNUAL COST ESTIMATE	
TASKS	Cost
Annual Inspection for sediment accumulation	$ 150.00
Removal of sediment accumulation every two years as needed	$ 500.00
Inspect for floatables and debris annually	$ 250.00
Removal of floatables and debris annually	$ 250.00
Inspection system for erosion annually	$ 250.00
Re-establish permanent vegetation on eroded slopes	$ 500.00
Replacement of Stone	$ 250.00
Mowing 0-2 times per year	$ 250.00
Inspect all components during wet weather & compare to construction plans	$ 400.00
Make adjustments or replacements as determined by annual wet weather inspection	$ 400.00
Keep records of all inspections and maintenance activities	$ 150.00
Keep records of all costs for inspections, maintenance and repairs	$ 150.00
Total Annual Budget	**$ 3,500.00**

LEGEND:

PR. STORM
EX. STORM
PIPELINE
WOODLAND
WETLANDS/BUFFER
SOIL TYPE
INFILTRATION PIT

Drainage Narrative

The proposed site condominium consists of approximately 20.5 acres in Pittsfield Township, located south of Michigan Avenue, east of Platt Road. The site generally slopes and drains from the northwest to the southeast, changing elevation from approximately 839 (Datum – NGVD 29) in the northwest corner to about 831 in the southeast section of the site. Stormwater follows this general pattern where it drains across adjacent properties, until reaching the US–23 right of way. On site soils are predominantly Blount Loam and St. Clair Loam.

On–site storm water will be managed through a combination of the existing detention basin located adjacent to Platt Road, and a proposed bioretention basin located southeast of lots 74–77. The existing basin detention was sized to include this phase of the project when it was expanded back in (approximately) 2005. Calculations have been included showing the previously approved calculations for volume and outlet rate, and have been supplemented with the calculations for Arbor Farms, Phase 2. The pond will discharge through the existing pipes under Platt Road and into the Koch–Warner Drain. The bioretention area has been sized to accomodate the required infiltration per the Washtenaw County Water Resources Rules and Guidelines.

DETENTION BASIN - SITE DRAINAGE AREA

ARBOR FARMS PHASE 2

CONSTRUCTION PLANS

PART OF THE NORTHWEST 1/4 OF SECTION 26, T.3S., R.6E., PITTSFIELD TOWNSHIP, WASHTENAW COUNTY, MICHIGAN

SHEET 26

ENGINEERS, SURVEYORS
MLP
AND ASSOCIATES, INC.
Michael L. Priest & Associates, Inc.
40655 Koppernick Road, Canton, MI 48187
phone: (734) 459–8560
fax: (734) 459–2585

STATUS:

REVISIONS
PER TWSP. & WCWRC LETTER 10–02–19
PER TWP ENG REVIEW LETTER 10–17–19
PER TWP ENG REVIEW LETTER 10–28–19

JOB NO. 9525.4.18

APPLICANT
PITTSFIELD LAND LLC
23370 COMMERCE DRIVE
FARMINGTON HILLS, MI 48335
248–921–3996
ATTN: JEFF KATZEN

DATE: 07–10–2019
PM: GMS
PNC: GMS
SURV: AEC
CAD: AGB
\DWG\9525.dwg
XCAT:M.U.S.C. & S.S.
SCALE: 1" = 60'

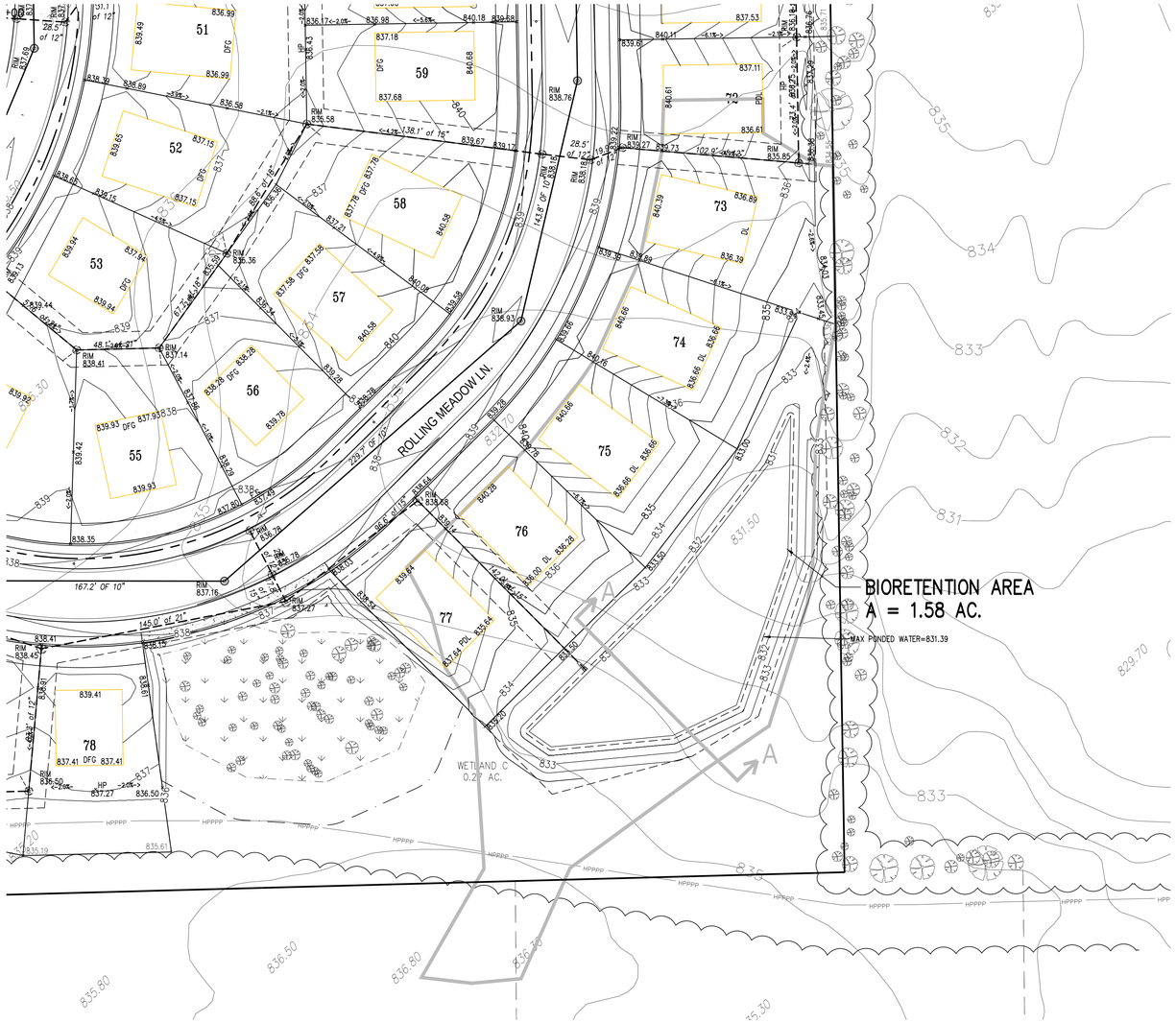

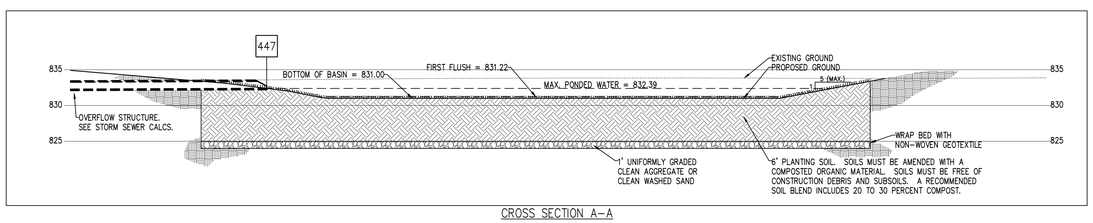

CROSS SECTION A–A
1" = 10'

BIORETENTION BASIN CALCULATIONS

W1 Determining Post-Development Cover Types, Areas, Curve Numbers and runoff coefficients

Total Contributing Drainage Area = 69,012 ft^2 = 1.58 ac.

Rational Method Variables

Cover Type	Soil Type	Area (sf)	Area (ac)	Runoff Coef. (c)	(c) (Area)
Road, Roof, Driveway, Walk	N/A	11,808	0.27	0.95	11,218
Pervious	C	31,486	0.72	0.30	9,446
Pervious	D	25,718	0.59	0.45	11,573
				Total - Σ (c)(Area) =	32,237
				Area Total (sf) =	69,012
				Weighted C - Σ(c)(Area) / ΣArea	0.47

NRCS Variables

Pervious Cover Type	Soil Type	Area (sf)	Area (ac)	Curve Number	(CN) (Area)
Lawn	**C**	31,486	0.72	74	2,329,964
Lawn	**D**	25,718	0.59	80	2,057,440
			0.00	0	0
				Total - Σ (CN)(Area) =	4,387,404
				Area Total (sf) =	57,204
				Weighted CN - Σ(CN)(Area) / ΣArea	77

Impervious Cover Type	Soil Type	Area (sf)	Area (ac)	Curve Number	(CN) (Area)
Road, Roof, Driveway, Walk	N/A	11,808	0.27	98	1,157,184
			0.00	98	0
				Total - Σ (CN)(Area) =	1,157,184
				Area Total (sf) =	11,808
				Weighted CN - Σ(CN)(Area) / ΣArea	98

W2 First Flush Runoff Calculations (Vff)

A. Vff - 1" (1/12) (43560/1) (C) (Area) = 2,679 ft^3

W6 Pervious Cover Post-development 100-year Storm Runoff Calculations (V100-per-post)

A.	100-year storm event	P =	5.11 in
B.	Pervious Cover CN	CN =	77
C.	S = (1000/CN) - 10	S =	3.04 in
D.	$Q_{100\text{-}per} = (P - 0.2S)^2/(P+0.8S)$	$Q_{100\text{-}per}$ =	2.69 in
E.	Pervious Cover Area	Area =	57,204 ft^2
F.	$V_{100\text{-}per\text{-}post} = Q \times (1/12) \times$ Area	$V_{100\text{-}per\text{-}post}$ =	12,823 ft^3

W7 Impervious Cover Post-development 100-year Storm Runoff Calculations (V100-imp-post)

A.	100-year storm event	P =	5.11 in
B.	Impervious Cover CN	CN =	98
C.	S = (1000/CN) - 10	S =	0.20 in
D.	$Q_{100\text{-}imp} = (P - 0.2S)^2/(P+0.8S)$	$Q_{100\text{-}imp}$ =	4.88 in
E.	Impervious Cover Area	Area =	11,808 ft^2
F.	$V_{100\text{-}imp\text{-}post} = Q \times (1/12) \times$ Area	$V_{100\text{-}imp\text{-}post}$ =	4,802 ft^3

W9 Runoff Summary & Onsite Infiltration Requirement

$V_{100\text{-}per\text{-}post}$ =	12,823	ft^3	**Total 100-year Volume (V_{100})**
$V_{100\text{-}imp\text{-}post}$ =	4,802	ft^3	17,625 ft^3

E. Total Volume Provided:

STORAGE

Elevation	Area (ft^2)	Height (ft)	Incremental Volume (ft^3)	Cumulative Volume (ft^3)	
Basin					
831	10,552			0	
		1.00	11956		V_{FF} = 831.22
832	13,360			11,956	
		0.50	7217		V_{100} = 832.39
832.5	15,507			19,173	

* Based on tested infiltration rate of 26.5 in/hr, it is being requested to allow the additional ponding depth above grade, as stated on page 62 of the "Rules and Guidelines, Procedures & Design Criteria for Stormwater Management Systems"

INFILTRATION BASIN CALCULATIONS

ARBOR FARMS PHASE 2
CONSTRUCTION PLANS
PART OF THE NORTHWEST 1/4 OF SECTION 26, T.3S., R.6E., PITTSFIELD TOWNSHIP, WASHTENAW COUNTY, MICHIGAN

SHEET
27

ENGINEERS • SURVEYORS
MLP
AND ASSOCIATES, INC.
Michael L. Priest & Associates, Inc.
40655 Koppernick Road, Canton, MI 48187
phone: (734) 459–8560
fax: (734) 459–2585

DATE: 07–10–2019

PM:	GMS
PIC:	GMS
SURV:	AEC
CAD:	AGB
\DWG\9525.dwg	
VERTICAL:	N.G.V.D.
SCALE:	1" = 40'

APPLICANT
PITTSFIELD LAND LLC
23370 COMMERCE DRIVE
FARMINGTON HILLS, MI 48335
248–921–3996
ATTN: JEFF KATZEN

STATUS:
JOB NO. 9525.4.18

REVISIONS
10–02–19 PER TWSP. & WCWRC LETTER
10–17–19 PER TWP ENG REVIEW LETTER
10–23–19 PER TWP ENG REVIEW LETTER
10–28–19 PER TWP ENG REVIEW LETTER

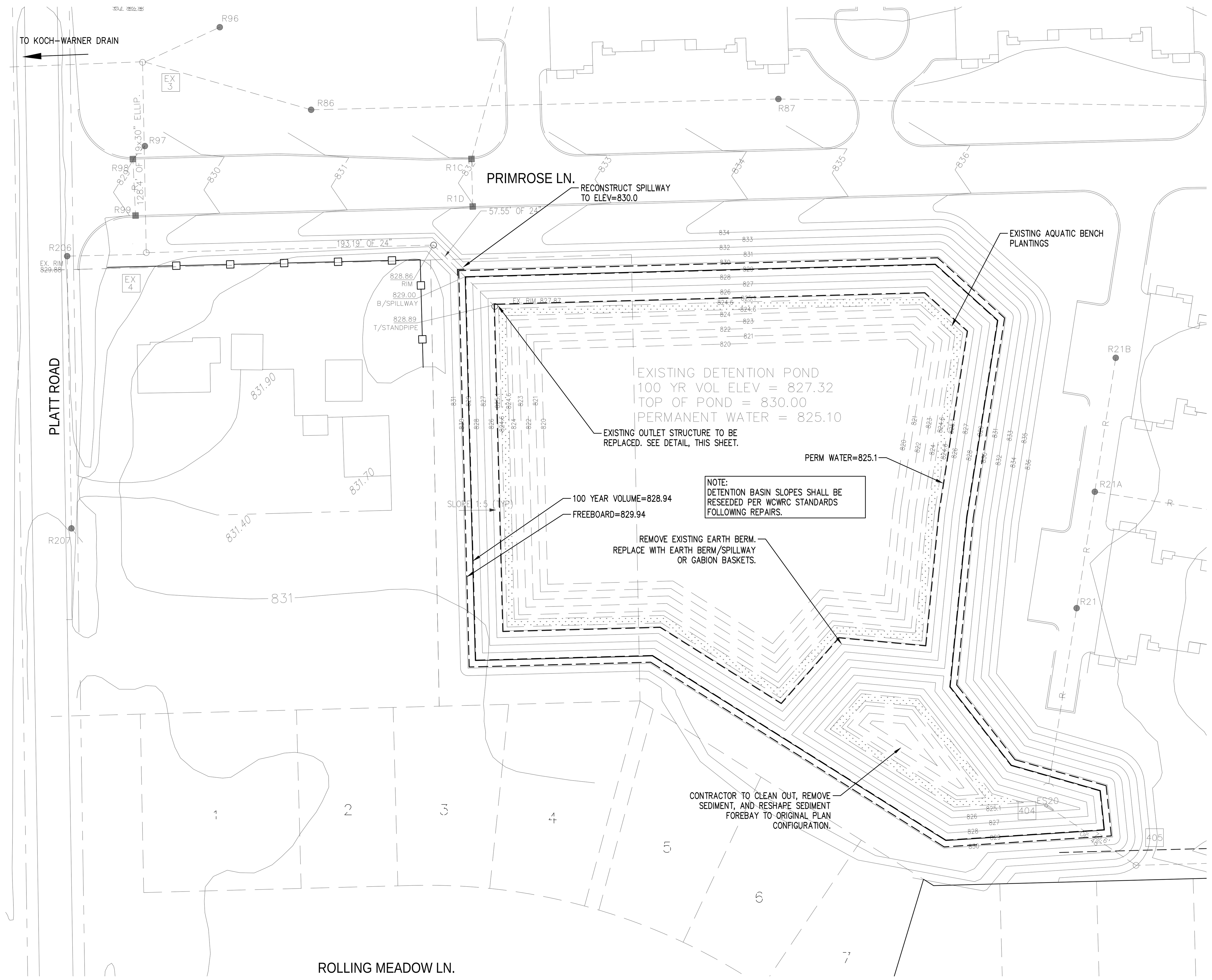

DETENTION CALCULATIONS

Q_{ALLOW} (includes previously allowable discharge from Sheet 23)				Release Rate (cfs/ac)		Q_{ALLOW}	
	A (ac.)						
Rolling Meadows 3	6.3866	ac	x	0.15	=	0.96	cfs
Rolling Meadows #1 # #2	27.04	ac	x	0.20	=	5.41	cfs
Arbor Farms Phase 2	13.97	ac	x	0.15	=	2.10	cfs
					Q_{ALLOW} =	8.46	cfs

	Z	Vol.
First Flush	825.84	57,931
Bankfull	827.29	183,125
100-year	828.94	344,863

Elevation	Area	Depth	Volume	Total Volume
825.10	74,917			0
		0.90	70438	
826.00	81,612			70,438
		1.00	85551	
827.00	89,489			155,989
		1.00	93622	
828.00	97,754			249,610
		1.00	101774	
829.00	105,794			351,384
		1.00	109574	
830.00	113,353			460,958

FIRST FLUSH DISCHARGE

Q_{AVE} = V_{FF} / 86,400	=	0.6705	cfs
h_{AVE} = 2/3 * (Z_{FF} - Z_{BOT})	=	0.49	ft
A_{FF} = Q_{AVE} / (0.62 * √(2 * g * h))	=	0.1925	ft^2
Maximum # Orifice = A_{FF} / A_{ORIF}	=	8.83	
2" diameter holes	A_{ORIF} =	0.0218	ft^2
	Use =	8	holes
$Q_{ACT\ FF}$ = (0.62) * (# $_{ORIF}$) * ($A_{ACT\ ORIF}$) * √(2 * g * h))	=	0.6074	cfs
Determine the actual holding time:			
$T_{ACT\ FF}$ = V_{FF} / $Q_{ACT\ FF}$	=	26.5	hrs > 24 hours

USE 8, 2" DIA HOLES AT 825.1

BANKFULL DISCHARGE

A. Bankfull storm must be discharged between 36 and 48 hours. Check first flush orifice

h_{AVE} = 2/3 x (Z_{BF} - Z_{BOT})	=	1.46	ft
Q_{BF} = (0.62) * (# $_{ORIF}$) * ($A_{ACT\ ORIF}$) * √(2 * g * h)	Q_{BF} =	1.048	cfs
T_{BF} = V_{BF} / Q_{BF}	=	48.5	hr

B. Because holding times exceeds 48 hours, additional orfices are required. Since the time for the first flush volume to release was 26.5 hours, the remaining volume must be released so the total detention time falls between 36 and 48 hours.
A target time of 40 was chosen in this case

V_{REM} = V_{BF} - V_{FF}	=	125,194	cf
T_{REM} = T_{TARGET} - $T_{ACT\ FF}$	=	13.51	hrs

C. Volume released by 8 , 2" diameter Orifice(s) in 13.51 hours

$h_{FF\ AVE}$ = 2/3 * (Z_{BF} - Z_{FF}) + (Z_{FF} - Z_{BOT})	=	1.71	ft

Q_{FF+BF} Is the discharge through the first flush orifice(s) when both the first flush and bankfull holes are contributing

Q_{FF+BF} = (0.62) * (# $_{ORIF}$) * (A_{ACT}) * √(2 * g * $h_{FF\ AVE}$)	=	1.134	cfs
V_{FF+BF} = (T_{REM}) * Q_{FF+BF}	=	55,121	cf

D. The leftover volume will be released by the bankfull orifice(s). Vbf will be defined as the amount of water to be discharged by the bank full orifice(s) in 13.51 hours.

V_{BF} = V_{REM} - V_{FF+BF}	=	70,073	cf
Q_{BF} = V_{BF} / T_{REM}	=	1.441	cf
$h_{BF\ AVE}$ = 2/3 * (Z_{BF} - Z_{FF})	=	0.97	ft
A_{BF} = Q_{BF} / (0.62 * √(2 * g * $h_{BF\ AVE}$))	=	0.2946	ft^2
2" diameter holes	A_{ORIF} =	0.0218	ft^2
Max # $_{ORIF}$ = A_{BF} / A_{ORIF}	=	13.51	
	Use =	13	holes

USE 13, 2" DIA HOLES AT 825.84

E. Actual detention time

$Q_{ACT\ BF}$ = (0.62) * (# $_{ORIF}$) * ($A_{ACT\ ORIF}$) * √(2 * g * $h_{BF\ AVE}$)	=	1.386	cfs	
$T_{ACT\ BF}$ = $T_{ACT\ FF}$ + [V_{REM} / ((Q_{FF+BF} + $Q_{ACT\ BF}$) * 3600)]	=	40.3	hr	36 < $T_{ACT\ BF}$ < 48

100 YEAR STORM

A. Calculate max flow passing through FF and BF orifices using total head, and subtract Qallow to determine the orifice size to release the 100-year storm volume

Q_{FF} + Q_{BF} = 0.62(#$_{FF\ ORIF}$)($A_{FF\ ORIF}$)√(2g(Z_{100} - Z_{BOT})) + 0.62(#$_{BF\ ORIF}$)($A_{BF\ ORIF}$)√(2g(Z_{100} -		4.183	cfs	
$Q_{MAX\ 100}$ = Q_{ALLOW} - (Q_{FF} + Q_{BF})	=	4.277	cfs	
$A_{MAX\ 100}$ = $Q_{MAX\ 100}$ / (0.62 * √(2g(Z_{100} - Z_{BF})))	=	0.6692	sf	
2.25 " dia Orifice	A_{ORIF} =	0.0276	sf	
Max #$_{ORIF}$ = $A_{MAX\ 100}$ / A_{ORIF}	=	24.25		
	Use =	24	holes	

USE 24, 2.25" DIA HOLES AT 827.29

B. Confirm that allowable flow rate has not been exceeeded by the actual number of Q_{FF} + Q_{BF} + (0.62 * (#$_{ORIF}$)(A_{100})√(2 * g * $h_{100\ TOT}$)) < Q_{ALLOW}	=	8.417	cfs	< 8.46 cfs
C. The 100-year volume must discharge in less than 72 hours. $h_{ALLOW\ AVE}$ = 2/3 (Z_{100} - Z_{BF}) + (Z_{BF} - Z_{BOT})	=	3.29	ft	
Q_{ALLOW} = (0.62)(#$_{FF\ ORIF}$)($A_{FF\ ORIF}$) * √(2 * g * $h_{ALLOW\ AVE}$)	=	0.197	cfs	
D. Q_{BF+100} is the discharge through bankfull orifices when FF, BF and 100-yr holes are $h_{BF\ AVE}$ = 2/3 (Z_{100} - Z_{BF}) + (Z_{BF} - Z_{FF})	=	2.55	ft	
Q_{BF+100} = (0.62 * (#$_{BF\ ORIF}$)($A_{BF\ ORIF}$)√(2 * g * $h_{BF\ AVE}$))	=	0.219	cfs	
E. Determine average discharge through 100-year orifices when other orifices are $h_{100\ AVE}$ = 2/3 (Z_{100} - Z_{BF})	=	1.1	ft	
$Q_{100\ AVE}$ = (0.62 * (#$_{100\ ORIF}$)($A_{100\ ORIF}$)√(2 * g * $h_{100\ AVE}$))	=	3.457	cfs	
F. Confirm 100-year storm is dicarged in less than 72 hours V_{REM} = V_{100} - V_{BF}	=	161,738	cf	
T_{100} = T_{BF} + (V_{REM} / (Q_{ALLOW} + Q_{BF+100} + $Q_{100\ AVE}$)	=	51.9	hr	≤ 72 hr

Therefore, the design meets both the time of detention and the flow rate requirements.

DETENTION CALCULATIONS

W1 Determining Post-Development Cover Types, Areas, Curve Numbers and runoff coefficients

Total Contributing Drainage Area = 597,204 ft^2 = 13.71 ac.

Rational Method Variables

Cover Type	Soil Typ	Area (sf)	Area (ac)	Runoff Coef. (c)	(c) (Area)
Road, Roof, Driveway, Walk	N/A	**225,947**	5.19	0.95	214,650
Lawn	C	**34,224**	0.79	0.30	10,267
Lawn	D	**337,033**	7.74	0.45	151,665
				Total - Σ (c)(Area) =	376,582
				Area Total (sf) =	597,204
				Weighted C - Σ(c)(Area) / ΣArea	0.63

NRCS Variables

Pervious Cover Type	Soil Typ	Area (sf)	Area (ac)	Curve Number	(CN) (Area)
Lawn	**C**	**34,224**	0.79	74	2,532,576
Lawn	**D**	**337,033**	7.74	80	26,962,640
			0.00	0	0
				Total - Σ (CN)(Area) =	29,495,216
				Area Total (sf) =	371,257
				Weighted CN - Σ(CN)(Area) / ΣArea	79

Impervious Cover Type	Soil Typ	Area (sf)	Area (ac)	Curve Number	(CN) (Area)
Road, Roof, Driveway, Walk	N/A	**225,947**	5.19	98	22,142,806
			0.00	98	0
				Total - Σ (CN)(Area) =	22,142,806
				Area Total (sf) =	225,947
				Weighted CN - Σ(CN)(Area) / ΣArea	98

W2 First Flush Runoff Calculations (Vff)

A. Vff - 1" (1/12) (43560/1) (C) (Area) = 31,382 ft^3

W3 Predevelopment Bankfull Runoff Calculations (Vbf-pre)

A.	2 year/24 hour storm event		P =	2.35	in
B.	Pervious Cover CN (Meadow, good)		Area	CN	A x CN
		Soil Type C	62,419	71	4,431,749
		Soil Type D	534,785	78	41,713,230
			597,204	77	46,144,979
C.	S = (1000/CN) - 10		S =	2.99	in
D.	Q = (P -0.2S)^2 / (P+0.8S)		Q =	0.65	in
E.	Total Site Area		Area =	597,204	ft^2
F.	V_{bf-pre} = Q x (1/12) x Area		V_{bf-pre} =	32,349	ft^3

W4 Pervious Cover Post-development Bankfull Runoff Calculations (Vbf-per-post)

A.	2 year/24 hour storm event	P =	2.35	in
B.	Pervious Cover CN	CN =	79	
C.	S = (1000/CN) - 10	S =	2.59	in
D.	Q = (P -0.2S)^2/(P+0.8S)	Q =	0.76	in
E.	Pervious Cover Area	Area =	371,257	ft^2
F.	$V_{bf-per-post}$ = Q x (1/12) x Area	$V_{bf-per-post}$ =	23,513	ft^3

W5 Impervious Cover Post-development Bankfull Runoff Calculations (Vbf-imp-post)

A.	2 year/24 hour storm event	P =	2.35	in
B.	Impervious Cover CN	CN =	98	
C.	S = (1000/CN) - 10	S =	0.20	in
D.	Q = (P -0.2S)^2/(P+0.8S)	Q =	2.13	in
E.	Pervious Cover Area	Area =	225,947	ft^2
F.	$V_{bf-imp-post}$ = Q x (1/12) x Area	$V_{bf-imp-post}$ =	40,106	ft^3

W6 Pervious Cover Post-development 100-year Storm Runoff Calculations (V100-per-post)

A.	100-year storm event	P =	5.11	in
B.	Pervious Cover CN	CN =	79	
C.	S = (1000/CN) - 10	S =	2.59	in
D.	$Q_{100-per}$ = (P -0.2S)^2/(P+0.8S)	$Q_{100-per}$ =	2.94	in
E.	Pervious Cover Area	Area =	371,257	ft^2
F.	$V_{100-per-post}$ = Q x (1/12) x Area	$V_{100-per-post}$ =	90,958	ft^3

W7 Impervious Cover Post-development 100-year Storm Runoff Calculations (V100-imp-post)

A.	100-year storm event	P =	5.11	in
B.	Impervious Cover CN	CN =	98	
C.	S = (1000/CN) - 10	S =	0.20	in
D.	$Q_{100-imp}$ = (P -0.2S)^2/(P+0.8S)	$Q_{100-imp}$ =	4.88	in
E.	Impervious Cover Area	Area =	225,947	ft^2
F.	$V_{100-imp-post}$ = Q x (1/12) x Area	$V_{100-imp-post}$ =	91,885	ft^3

W8 Determine Time of Concentration (Tc-hrs)

A. User specified; assume 20 minutes — Total Time of Concentration = 0.33 hrs

W9 Runoff Summary & Onsite Infiltration Requirement

A. Runoff Summary from Previous Worksheets

V_{ff} =	31,382	ft^3	
V_{bf-pre} =	32,349	ft^3	
$V_{bf-per-post}$ =	23,513	ft^3	**Total BF Volume ($V_{bf-post}$)**
$V_{bf-imp-post}$ =	40,106	ft^3	63,619 ft^3
$V_{100-per-post}$ =	90,958	ft^3	**Total 100-year Volume (V_{100})**
$V_{100-imp-post}$ =	91,885	ft^3	182,843 ft^3

B. Determine Onsite Infiltration Requirement

$V_{bf-post}$ =	63,619	ft^3
V_{bf-pre} =	32,349	ft^3
Bankfull Volume Difference =	**31,270**	ft^3

Onsite Infiltration Requirement (V_{inf}) = 31,382 ft^3

W10 Detention / Retention Requirement

A.	Q_p = 238.6 (T_c) ^ -0.82	Q_p =	587.37	cfs/in-mi^2
B.	Total Site Area	Area =	13.7	ac
C.	Q_{100} = $Q_{100-per}$ + $Q_{100-imp}$	Q_{100} =	7.82	in
D.	Peak Flow (PF) = (Q_p x Q_{100} x A) / 640	PF=	98.40	cfs
E.	Δ = PF - 0.15A	Δ =	96.34	cfs
F.	V_{det} = (Δ / PF) x V_{100}	V_{det} =	179,015	ft^3

W11 Determine Applicable BMPs and Associated Volume Credits

W11 Determine Applicable BMPs and Associated Volume Credits

Proposed BMP	Area (ft^2)	Storage Volume (ft^3) Surface	Soil	Ave. Design Infiltration Rate (in/hr)	Infil. Volume During Storm (ft^3)	Total Volume Reduction (ft^3)
Bioretention Basin	**13,030**	**9,074**	11,075	10.0	65,148	17,625

*based on 100-year storm volume from infiltration calcs)

W12 Natural Features Inventory

Existing Natural Resources	Mapped (Y, N, N/A)	Total Area (ac.)	Protected/Undisturbed Area (ac.)
Waterbodies	N/A		
Floodplains	N/A		
Riparian Areas	N/A		
Wetlands		0.94	0.83
Woodlands		2.24	2.24
Natural Drainage Area	N/A		
Steep Slopes, 15-25%	N/A		
Steep Slopes, over 25%	N/A		
Special Habitat Areas	N/A		
Other	N/A		
TOTAL EXISTING (ac.)		3.18	3.07

W13 Summary

A. Stormwater Management Summary

Minimum Onsite Infiltration Requirement, V_{inf}	V_{inf} =	31,382	ft^3
Designed/Provided Infiltration Volume		17,625	ft^3
Percent Minimum Required Infiltration Provided		56	%
Total Calculated Detention Volume	V_{det} =	179,015	ft^3
Net Required Detention Volume (V_{det}- Provided Infiltration)	$V_{det-net}$ =	161,390	ft^3

B. Detention Volume Increases for sites where the required volume cannot be achieved

% Required Infiltration NOT Provided (100%- % Min. Infiltration Provided) =	44	%
Net % Penalty (20% x % Infiltration NOT Provided) =	9	%
Total Required Detenton Volume, including penalty =	175,540	ft^3

C. Previous Detention Requirements (Rolling Meadows #1 & #2, Arbor Farms #1, Rosewood Village)

First Flush Volume =	26,549	ft^3
Bankfull Volume =	119,506	ft^3
100-year Volume =	169,323	ft^3

D. Total Volume Required (including Arbor Farms #2)

First Flush Volume =	V_{ff} =	57,931	ft^3
Bankfull Volume =	V_{bf} =	183,125	ft^3
100-year Volume =	V_{100} =	344,863	ft^3
Sediment Forebay (5% of V_{100})	$V_{forebay}$ =	17,243	ft^3

E. Total Detention Provided:

	Elevation	Area (ft^2)	Height (ft)	Incremental Volume (ft^3)	Cumulative Volume (ft^3)		
Forebay							
	825.10	4,945			0		
			0.90	5245			
	826.00	6,711			5,245		
			0.45	3242			
	826.45	7,700			8,488		
			0.55	4572			
	827.00	8,924			13,059		
			1.00	10126			
	828.00	11,328			23,185		
Basin (PERMANENT POOL)							
	820	40,776			0		
			1.00	42918			
	821	45,059			42,918		
			1.00	47300			
	822	49,540			90,217		
			1.00	51879			
	823	54,217			142,096		
			1.00	56656			
	824	59,095			198,752		
			0.60	36362			
	824.6	62,112			235,114		
			0.00	0			
	824.6	67,302			235,114		
			0.50	34319			
	825.1	69,972			269,432	> 2.5 * Vff =	144,828
STORAGE	825.10	74,917			0		
			0.90	70,438			
	826.00	81,612			70,438		
			1.00	85,551			
	827.00	89,489			155,989		
			1.00	93,622			
	828.00	97,754			249,610		
			1.00	101,774			
	829.00	105,794			351,384		
			1.00	109,574		**V100=**	**828.94**
	830.00	113,353			460,958		

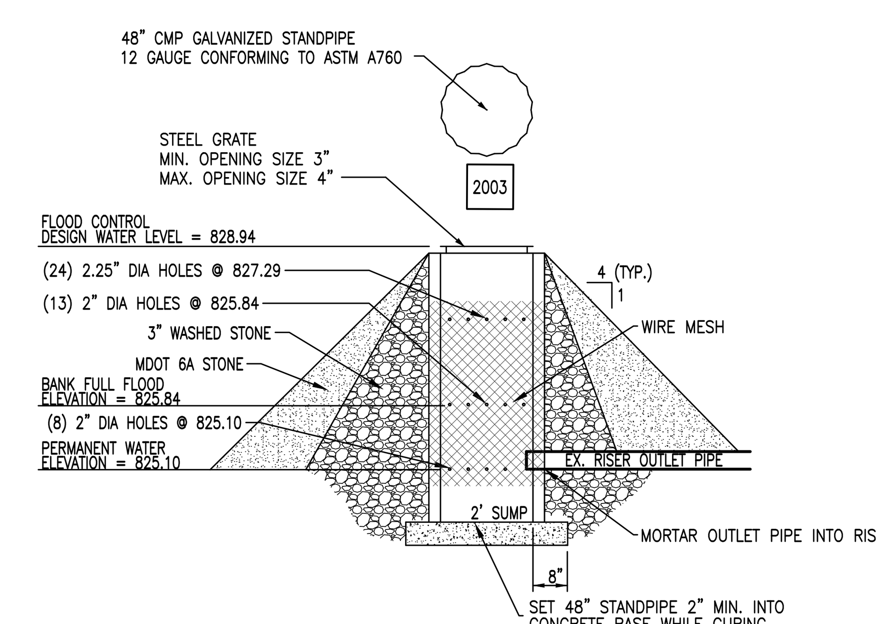

DETENTION BASIN OUTLET STRUCTURE
NO SCALE

APPLICANT
PITTSFIELD LAND LLC
23370 COMMERCE DRIVE
FARMINGTON HILLS, MI 48335
248-921-3996
ATTN: JEFF KATZEN

DATE: 07-10-2019
PM: GMS
ENG: GMS
SURV: AEC
CAD: ADB
\DWG\9525.dwg
VDATUM:U.S.C. & G.S.
SCALE: 1" = 50'

JOB NO. 9525.4.18

STATUS:
REVISIONS
08-27-19 PER TWSP. & WCWRC
10-02-19 PER TWP ENG REVIEW LETTER
10-10-19 PER TWP ENG REVIEW LETTER
10-28-19 PER TWP ENG REVIEW LETTER

ENGINEERS . SURVEYORS
MLP AND ASSOCIATES, INC.
Michael L. Priest & Associates, Inc.
40655 Koppernick Road, Canton, MI 48187
phone: (734) 459-8560
fax: (734) 459-2585

DETENTION BASIN CALCULATIONS

ARBOR FARMS PHASE 2

CONSTRUCTION PLANS

PART OF THE NORTHWEST 1/4 OF SECTION 26, T.3S., R.6E., PITTSFIELD TOWNSHIP, WASHTENAW COUNTY, MICHIGAN

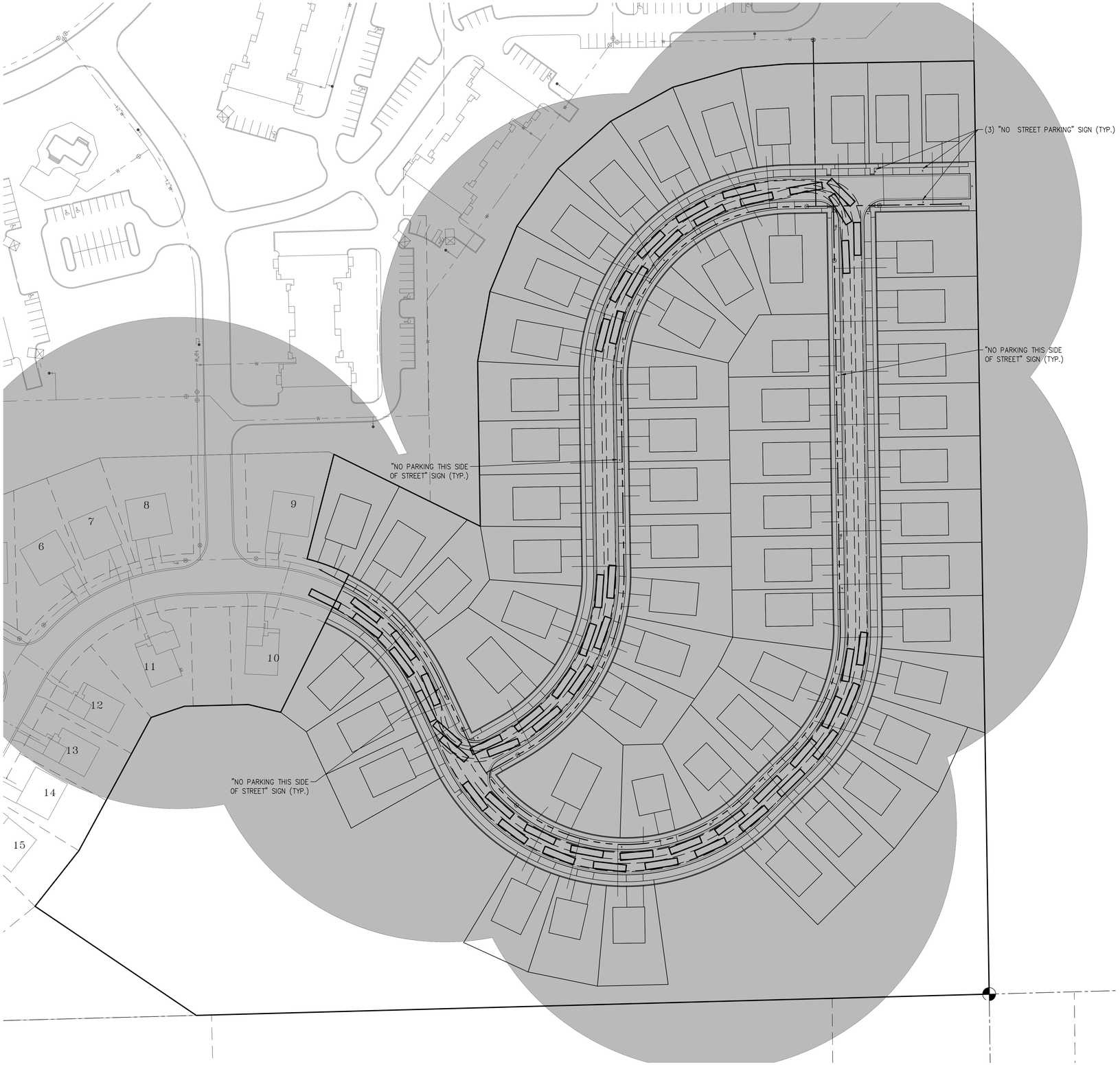

LEGEND:

WATERMAIN (PROPOSED)

WATERMAIN (EXISTING)

300' RADIUS HYDRANT COVERAGE

BUILDING HEIGHT: 2 STORIES / 32 FEET

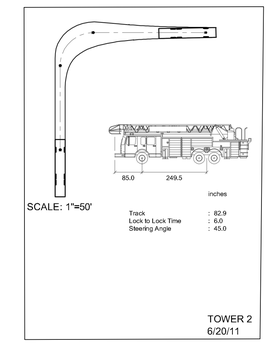

APPLICANT

PITTSFIELD LAND LLC
23370 COMMERCE DRIVE
FARMINGTON HILLS, MI 48335
248-921-3996
ATTN: JEFF KATZEN

DATE: 07-10-2019
PM: GMS
PN: PUMAS
SURV: AEC
CAD: AGB
\DWG\9525.dwg
VOLUME:U.S.C. & G.S.
SCALE: 1" = 60'

STATUS:

JOB NO. 9525.4.18

REVISIONS
10-02-19 PER TWSP. & WCWRC
10-02-19 PER TWP ENG REVIEW LETTER
10-28-19 PER TWP ENG REVIEW LETTER
10-28-19 PER TWP ENG REVIEW LETTER

ENGINEERS, SURVEYORS AND ASSOCIATES, INC.
MLP
Michael L. Priest & Associates, Inc.
40655 Koppernick Road, Canton, MI 48187
phone: (734) 459-8560
fax: (734) 459-2585

FIRE PROTECTION PLAN

ARBOR FARMS PHASE 2

CONSTRUCTION PLANS

PART OF THE NORTHWEST 1/4 OF SECTION 26, T.3S., R.6E.,
PITTSFIELD TOWNSHIP, WASHTENAW COUNTY, MICHIGAN

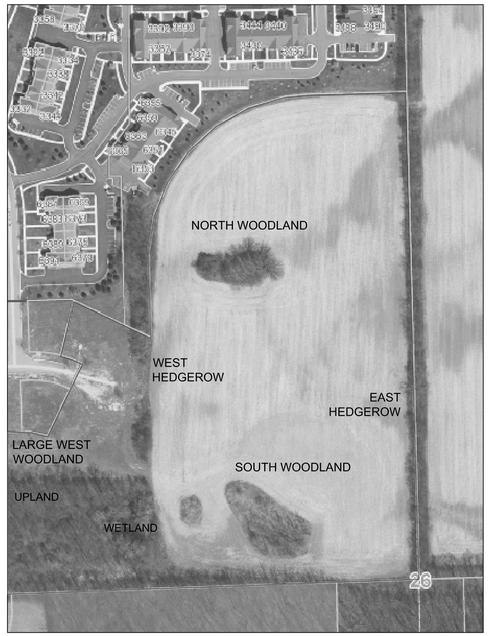

WOODLAND ECOSYSTEMS MAP — not to scale

SEED MIX COMPOSITIONS

CUSTOM BIORETENTION SEED MIX
MICHIGAN WILDFLOWER FARM
A composition of wildflowers, sedges, and grasses.
Application rate: 3 oz. per 1000sq. ft. or 7 lbs. per acre.

BOTANICAL NAME	COMMON NAME
Wildflowers	
Asclepias syriaca	Common Milkweed
Angelica atropurpurea	Angelica
Eupatorium maculatum	Joe-Pye Weed
Eupatorium perfoliatum	Boneset
Helianthus giganteus	Tall Sunflower
Liatris spicata	Marsh Blazing Star
Monarda fistulosa	Bee-Balm
Ratibita pinnata	Yellow Coneflower
Silphium perfoliatum	Cupplant
Solidago caesia	Blue-Stemmed Goldenrod
Tradescantia ohioensis	Spiderwort
Vernonia missurica	Ironweed
Sedges/Grasses	
Andropogon gerardii	Big Bluestem
Carex comosa	Bristly Sedge
Elymus virginicus	Virginia Wild Rye

CUSTOM BIO-RETENTION SEED MIX

MICHIGAN WILDFLOWER FARM
11770 Cutler Road
Portland, Michigan
48875-9452
Tele: (517) 647 6010
Fax: (517) 647 6072

BIORETENTION MAINTENANCE NOTES:

1. ESTABLISHMENT: During the first growing season, the native seed areas should be mowed two (2) to four (4) times to a height of four inches to six inches (4"-6") when the plants reach a height of ten inches to twelve inches (10"-12"). Hand pulling may be needed to control unwanted weed populations. If a mower cannot be set high enough, a string trimmer can be used. During the second growing season, the native seed areas should be mowed a few times to a height of about eight inches (8"), when the plants reach a height of ten inches to eighteen inches (10"-18"). Hand pulling may be needed to control unwanted weed populations. By the second growing season, some areas may need reseeding. Long term management includes mowing and hand pulling of weeds.
2. WATERING: Watering should be performed as needed. During the establishment period after the initial planting, watering is very important and should be conducted every two to three (2-3) days. The initial planting should be checked regularly for appropriate moisture availability. Two (2) methods for determining adequate moisture levels include the following: a.) if the plants wilt during the day when the temperature is at its highest, but revive during the night, then watering is not necessary, and b.) by testing the soil moisture at a depth of four inches (4") by inserting a small rod into the soil. If the rod is wet, then the soil is moist at a depth of four inches (4") and watering is not necessary.
3. EROSION CONTROL: Provide an erosion control blanket on the side slopes of the seeded areas in the bioretention area. The erosion control blanket shall be pegged in place.
4. EDGING: The edge of the bioretention area should be maintained to avoid grass growing into the retention area. The edge can be maintained with a V-notch cut edge. The channel should be maintained at four inches (4") or greater and renewed every six to eight (6-8) weeks.
5. CUTTING BACK: Tall wildflowers should be cut back by one-third. Early flowering plants can be cut back in late June or early July and late flowering plants in late October.
6. REMOVAL OF LITTER AND DEBRIS: Litter, trash, and debris should be removed on a regular basis to insure that inlets remain free flowing and to keep the area in a neat and attractive appearance.
7. INORGANIC APPLICATIONS: In general, bioretention areas do not need fertilization as nutrients from surrounding areas is usually at an elevated level. If soil fertility appears to be an issue, the soil should be tested and appropriate actions taken based on the results. Insecticides, herbicides, fungicides, and rodenticides should not be used in the bioretention area. If a plant is diseased or infested with insects, it should simply be removed and replaced.

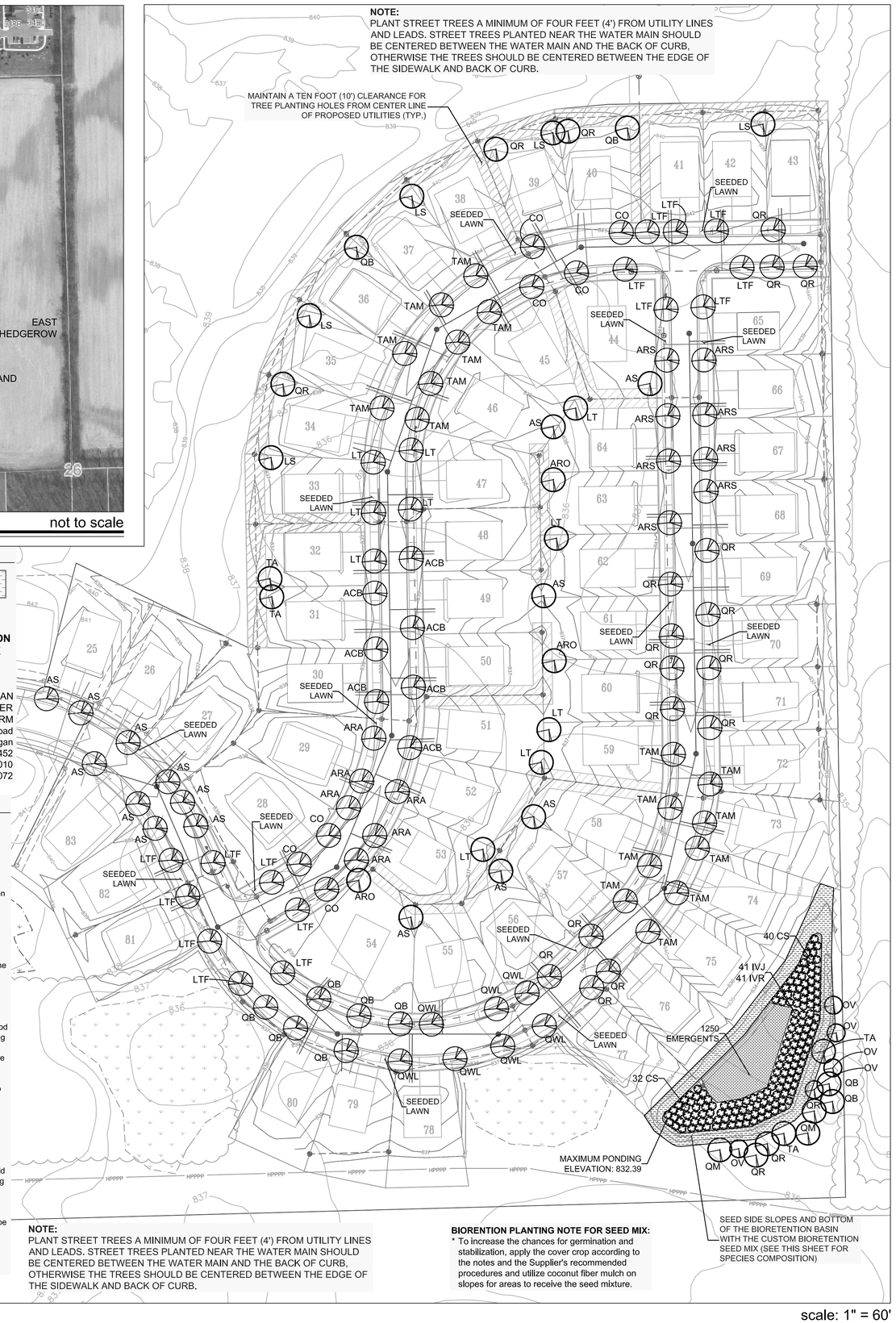

LANDSCAPE PLANTING PLAN — scale: 1" = 60'

WOODLAND DESCRIPTIONS

WEST HEDGEROW
* The west hedgerow consists of two (2) different specis composition. The south portion includes small to medium size trees of Cottonwood, Shagbark Hickory, White Oak, Red Oak, Black Cherry, and Elm with understory trees including Crabapple and Apple and shrubs including Buckthorn, Gray Dogwood, and Wild Rose. The north portion includes small to medium size trees of Pin Oak, Box Elder, Chinese Elm, and Cottonwood with understory trees including Hawthorn and shrubs including Buckthorn and Gray Dogwood.

EAST HEDGEROW
* The east hedgerow runs the entire length of the east property line. The hedgerow is dominated by large trees predominantly of Shagbark Hickory with some White Oak, Red Oak, and Black Cherry. Several dead trunks of Elm occur in the northerly portion of the hedgerow. The understory layer includes predominantly of small Red Oak with other small trees of Shagbark Hickory, White Oak, Black Cherry, and Elm with some Hawthorn. The shrub layer is dominated by Buckthorn with some Gray Dogwood, Wild Rose, and Grapevine.

SOUTH WOODLAND
* The south woodland consists predominately of Cottonwoods ranging in size from saplings to fifteen inches diameter at breast height. Standing water to eight inches (8") occurred in the Cottonwood stand. The edges include Red Maple, Elm, Buckthorn, and Gray Dogwood. The northeast perimeter is characterized by large mounds of soil with small trees including Box Elder, Maple, and Ash and shrubs including Buckthorn and Gray Dogwood. Meadow species observed includes Goldenrod and Aster.

NORTH WOODLAND
* The north woodland is dominated by two (2) large Bur Oak trees in the eastern portion. Other large trees include Oaks and Hickories. Two (2) large dead Elms occur in the central portion of this ecosystem. The understory layer includes Hawthorn and large Buckthorn. The shrub layer includes Buckthorn, Gray Dogwood, Poison Ivy, and Grapevine. The westerly portion consists of a dense thicket of Crabapples covered with Grapevine and a medium size Red Maple.

LARGE WEST WOODLAND
* The large east woodland is comprised of an upland ecosystem and a wetland ecosystem. The wooded upland forms the westerly portion and is characterized by the dominance of Hickory in the overstory with both Shagbark Hickory and Bitternut Hickory ranging in size from six inches to thirty-six inches (6" - 36"). Several large Red Oak trees also contribute to the overstory. Other smaller trees include Box Elder, White Oak, Bur Oak, Red Oak, American Elm, Black Cherry, and Red Maple. The understory consists of Hickory, Red Oak, and American Elm with many Hickory saplings. The shrub layer is sporadic with a dominance of Buckthorn. The ground layer includes Woodbine and Poison Ivy with some woodland wildflowers of Mayapple, Solomon's Seal, Creeping Strawberrybush, and Jack-in-the-Pulpit. The ground layer covers approximately fifty percent (50%) of the woodland floor. The wooded wetland consists of a large area of standing water in the central portion of the ecosystem with large trees of predominantly Cottonwood scattered throughout the standing water. Several Elm trees are dead. Some Red Maple occur in the wetland at the perimeter. Wetland shrubs include Red Twig Dogwood and Buttonbush. A large White Oak with many Shagbark Hickory and some Red Maple, Black Cherry, and Cottonwood occur at the perimeter in the wetland buffer area. The shrub layer in this area includes Buckthorn, Honeysuckle, Poison Ivy, and Grapevine.

PLANT LIST

KEY	QTY.	BOTANICAL NAME	COMMON NAME	SIZE
STREET TREE PLANTING				
ACB	7	*Aesculus x carnea* 'Briotii'	Brioti Red Horsechestnut	2" cal. B&B
ARA	6	*Acer rubrum* 'Armstrong'	Armstrong Red Maple	2" cal. B&B
ARS	8	*Acer rubrum* 'Red Sunset'	Red Sunset Red Maple	2" cal. B&B
AS	9	*Acer saccharum*	Sugar Maple	2" cal. B&B
CO	7	*Celtis occidentalis*	Northern Hackberry	2" cal. B&B
LT	5	*Liriodendron tulipifera*	Tuliptree	2" cal. B&B
LTF	15	*Liriodendron tulipifera* 'Fastigiata'	Fastigiate Tuliptree	2" cal. B&B
QB	6	*Quercus bicolor*	Swamp White Oak	2" cal. B&B
QR	15	*Quercus rubra*	Red Oak	2" cal. B&B
QWL	7	*Quercus x warei* 'Long'	Regal Prince Oak	2" cal. B&B
TAM	17	*Tilia americana* 'McKSentry'	McKSentry Amer. Linden	2" cal. B&B
BIORETENTION BASIN PLANTING				
CS	72	*Cornus sericea*	Red-Twig Dogwood	2" cal. B&B
IVJ	41	*Ilex verticillata* 'Jim Dandy'	Jim Dandy Winterberry	30" ht., 5 gal. pot
IVR	41	*Ilex verticillata* 'Red Sprite'	Red Sprite Winterberry	30" ht., 5 gal. pot
Emergent Plantings*				
CST	250	*Carex stipata*	Common Fox Sedge	Bare Root
IV	250	*Iris virginica*	Blue Flag Iris	Bare Root
LS	250	*Liatris spicata*	Blazing Star	Bare Root
OS	250	*Onoclea sensibilis*	Sensitive Fern	Bare Root
PV	250	*Panicum virgatum* 'Shenandoah'	Shenandoah Switch Grass	Bare Root

* Plant emergents in groups of twenty-five (25).

REPLACEMENT TREES

KEY	QTY.	BOTANICAL NAME	COMMON NAME	SIZE	CREDIT
AS	6	*Acer saccharum*	Sugar Maple	3" cal. B&B	18"
ARO	3	*Acer rubrum* 'October Glory'	October Glory Red Maple	3" cal. B&B	9"
LS	5	*Liquidambar styraciflua*	American Sweetgum	3" cal. B&B	15"
LT	5	*Liriodendron tulipifera*	Tuliptree	3" cal. B&B	15"
OV	5	*Ostrya virginiana*	American Hophornbeam	2" cal. B&B	10"
QB	4	*Quercus bicolor*	Swamp White Oak	3" cal. B&B	12"
QM	2	*Quercus macrocarpa*	Bur Oak	3" cal. B&B	6"
QR	6	*Quercus rubra*	Red Oak	3" cal. B&B	18"
TA	4	*Tilia americana* 'McSentry'	McSentry American Linden	3" cal. B&B	12"
					115"

One hundred fifteen (115) replacement inches provided.

LANDSCAPE CALCULATIONS:

STREET TREE PLANTINGS (5,069 l.f. of curb)
* One (1) deciduous tree / 50 l.f. = 102 trees

REPLACEMENT TREES
* One hundred fourteen inches (114") of replacement required

NOTES:
* STAKE TREES UNDER FOUR INCH (4") CALIPER.
* CONTRACTOR TO VERIFY PERCOLATION OF PLANTING PIT PRIOR TO INSTALLATION.
* SET TOP OF BALL THREE INCHES (3") ABOVE FINISH GRADE.
* SET STAKES VERTICAL & EVENLY SPACED.
* STAKES OR GUYS TO BE SECURED ABOVE THE FIRST BRANCH.
* DO NOT PRUNE TERMINAL LEADER. PRUNE ONLY DEAD OR BROKEN BRANCHES.
* REMOVE ALL TAGS, STRING, PLASTICS, AND OTHER MATERIALS THAT ARE UNSIGHTLY OR COULD CAUSE DAMAGE.

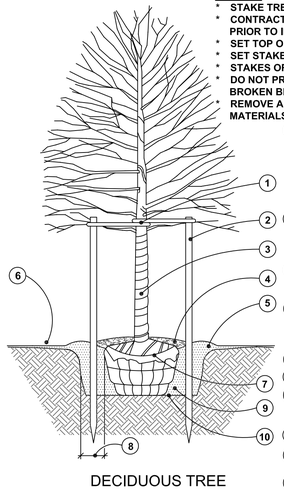

DECIDUOUS TREE

1. STAKE TREE JUST BELOW FIRST BRANCH USING TWO INCH TO THREE INCH (2"-3") WIDE BELT-LIKE MATERIAL OF NYLON, PLASTIC, OR OTHER ACCEPTABLE MATERIAL. (NO WIRE OR HOSE TO BE USED TO GUY TREES.) THREE (3) GUYS EVENLY SPACED PER TREE. REMOVE AFTER ONE (1) WINTER SEASON.
2. 2 x 2 HARDWOOD STAKES. POSITION SIX INCHES TO EIGHT INCHES (6"-8") OUTSIDE OF ROOTBALL AND EXTEND EIGHTEEN INCHES (18") BELOW TREE PIT INTO UNDISTURBED SOIL.
3. APPLY TREE WRAP AND SECURE WITH A BIODEGRADABLE MATERIAL AT TOP AND BOTTOM. REMOVE AFTER ONE (1) WINTER.
4. SHREDDED BARK MULCH OF A NATURAL COLOR AT FOUR INCH (4") MINIMUM DEPTH. LEAVE A THREE INCH (3") CIRCLE OF BARE SOIL AT THE BASE OF THE TREE.
5. MOUND TO FORM TREE SAUCER.
6. FINISH GRADE SLOPED AWAY FROM TREE.
7. CUT AND REMOVE WIRE, BURLAP, AND BINDINGS FROM THE TOP ONE-THIRD (1/3) OF THE ROOTBALL.
8. WIDTH OF ROOTBALL ON EACH SIDE.
9. PLANTING MIX SHALL BE AMMENDED PER SITE CONDITIONS AND PLANT REQUIREMENTS.
10. SCARIFY BOTTOM AND SIDES OF PLANTING PIT TO FOUR INCH (4") DEPTH.

PLANTING DETAILS — not to scale

LANDSCAPE DEVELOPMENT NOTES:

PLANTING
1. Installation of all plant material shall be in accordance with the latest edition of the *American Association of Nurserymen Standards for Nursery Stock* and with the specifications set forth by Pittsfield Township, Michigan.
2. The plant materials shall conform to the type stated on the plant list. Sizes shall be the minimum stated on the plant list or larger. All measurements shall be in accordance with the latest edition of the *American Association of Nurserymen Standards for Nursery Stock.*
3. The plant material shall be nursery grown and inspected by the Owner's representative before planting. The Owner's representative reserves the right to reject any plant material at any time.
4. Plants designated "B&B" shall be balled and burlapped with firm balls of earth.
5. Dig shrub pits one foot (1') larger than the shrub rootball, tree pits three (3) times the width of the tree rootball and backfill with one (1) part topsoil and one (1) part soil from excavated pit. Plant trees and shrubs at the same grade level at which they were planted at the nursery. If wet, clay soils are evident, plant trees and shrubs slightly higher.
6. The Contractor is responsible for planting the materials at the correct grades and spacing. The plants shall be oriented to give the best appearance.
7. When the plant has been properly set, the pit shall be backfilled with the topsoil mixture, gradually filling, patting, and settling with water.
8. Trees in lawn areas to have a four foot (4') circle of mulch, four inches (4') deep, and three inches (3") away from the trunk. Shrub beds are to be mulched with shredded bark mulch to a minimum depth of three inches (3"). Only natural color shredded hardwood bark mulch will be accepted.
9. Remove all twine, wire, and burlap from the top one third (1/3) of tree and shrub root balls and from tree trunks. Remove all non-biodegradable material such as plastic or nylon completely from branches and stems.
10. All plant materials shall be pruned and injuries repaired. The amount of pruning shall be limited to the removal of dead or injured limbs and to compensate for the loss of roots from transplanting. Cuts should be flush, leaving no stubs. Cuts over three quarters of an inch (3/4") shall be painted with tree paint. Shrubs along the site perimeter shall be allowed to grow together in a natural form.
11. Organic, friable topsoil shall be evenly distributed and fine graded over all areas to receive lawns at uniform depth of four inches (4") after settlement.
12. All lawn areas shall be seeded with a Grade A Kentucky Blue Grass blend over the topsoil.
13. All plantings shall be completed within three (3) months, and no later than November 30, from the date of issuance of a certificate of occupancy if such certificate is issued during the April1 thru September 30 period; if the certificate is issued during the October 1 thru March 31 period, the planting shall be completed no later than the ensuing May 31; plantings shall thereafter be reasonably maintained, including permanence and health of plant materials to provide a screen to abutting properties and including the absence of weeds and refuse.
15. Backfill directly behind all curbs and along sidewalks and compact to the to of curbs or walk to support vehicle and pedestrian weight without settling.

MATERIAL
1. Required landscape material shall satisfy the criteria of the American Association of Nurserymen Standards for Nursery Stock and be: a. Nursery grown; b. State Department of Agriculture inspected; c. No. 1 grade material with a straight, unscarred trunk, and well-developed uniform crown (park grade trees will not be accepted); d. Staked, wrapped, watered, and mulched according to the details provided; and e. Guaranteed for two (2) years.
2. Topsoil shall be friable, fertile soil of clay loam character containing at least five percent (5%) but not more than twenty percent (20%) by weight of organic matter with a pH range between 6.0 and 7.0. The topsoil shall be free from clay lumps, coarse sand, plant roots, sticks, and other foreign materials.
3. The lawn seed mixture shall consist of the following types and proportions: Kentucky Blue Grass blend "Baron/Sheri/Adelphi" @ sixty percent (60%), Chewing Fescue @ twenty-five percent (25%), Creeping Red Fescue @ ten percent (10%), and Perennial Rye Grass @ five percent (5%). Weed content shall not exceed one percent (1%). The mix shall be applied at a rate of 200 pounds per acre.

GENERAL
1. Do not plant deciduous or evergreen trees directly over utility lines or under overhead wires. Maintain a six foot (6') distance from the centerline of utilities and twenty feet (20') from the centerline of overhead wires for planting holes. Call MISS DIG forty-eight (48) hours prior to landscape construction for field location of utility lines.
2. The Contractor agrees to guarantee all plant material for a period of two (2) years. At that time, the Owner's representative reserves the right for a final inspection. Plant material with twenty-five percent (25%) die back, as determined by the Owner's representative shall be replaced. This guarantee includes the furnishing of new plants, labor, and materials. These new plants shall also be guaranteed for a period of one (1) year.
3. The work shall consist of providing all necessary materials, labor, equipment, tools, and supervision required for the completion as indicated on the drawings.
4. All landscape areas shall be irrigated by an automatic underground irrigation system. Lawns and shrub/landscape areas shall be watered by separate zones to minimize overwatering.

MAINTENANCE OF GENERAL LANDSCAPE AREAS
1. The Owner of the landscaping shall perpetually maintain such landscaping in good condition so as to present a healthy, neat, and orderly appearance, free from refuse and debris.
2. The Contractor is responsible for watering and maintenance of all seed areas until a minimum of ninety percent (90%) coverage, as determined by the Owner's representative.
3. All diseased and/or dead material shall be removed within sixty (60) days following notification and shall be replaced within the next appropriate planting season or within one (1) year, whichever comes first.

PLANTING IN THE BIORETENTION AREA
1. Follow the Supplier's recommended procedures for bed preparation and installation for the proposed seeded areas. After the plants germinate and begin to grow follow the maintenance guidelines included on this sheet.
2. The planting soil must be a loam topsoil, free of construction debris and subsoils, capable of supporting a healthy vegetative cover. Soils must be amended with a composted organic material. Rototill compost into the top six inches (6") of the surface of the topsoil in the bioretention area.The recommended soil blend is twenty percent to thirty percent (20% - 30%) compost.
3. Planting should occur from mid-March through early June or mid-September through mid-October.
4. Provide a cover crop of annual rye at a rate of ten pounds (10#) per acre and seed oats at a rate of thirty pounds (30#) per acre over the entire area to be seeded.

date: February 25, 2019
revised:

03-01-2019	Add stormwater basin.
04-30-2019	Revise for Township review letters.
07-21-2019	Revise for site plan changes & add bioretention notes.
08-28-2019	Revise for utility changes & Township review.
09-30-2019	Adjust tree locations.
10-07-2019	Minor adjustment to utilities.

811 Know what's below. Call before you dig.

60' 0' 60' 120' 180' north
scale: 1" = 60'

LANDSCAPE PLAN FOR:
Michael L. Priest
& Associates, Inc.
40655 Koppernick
Canton, Michigan 48187
(734) 459-8560

PROJECT LOCATION:
Arbor Farms Subdivision
Phase II Development
East Side of Platt Road &
South of W. Michigan Ave.
Pittsfield Township,
Michigan

STATE OF MICHIGAN J. BRIAN DEVLIN NO.1260 REGISTERED LANDSCAPE ARCHITECT

LANDSCAPE PLAN BY:
Nagy Devlin Land Design
31736 West Chicago Avenue
Livonia, Michigan 48150
(734) 634 9208

J. Brian Devlin
AUTOCAD SIGNATURE
ORIGINAL IN BLUE

Sheet 30: LANDSCAPE PLANTING PLAN

* Base data provided by Michael L. Priest & Associates, Inc.

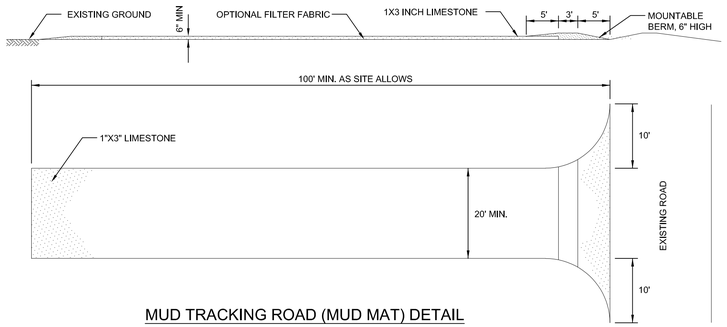

MUD TRACKING ROAD (MUD MAT) DETAIL

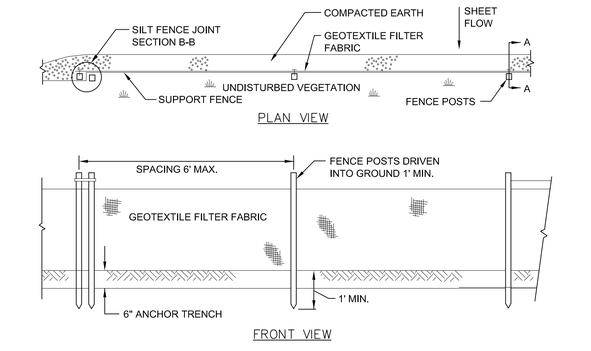

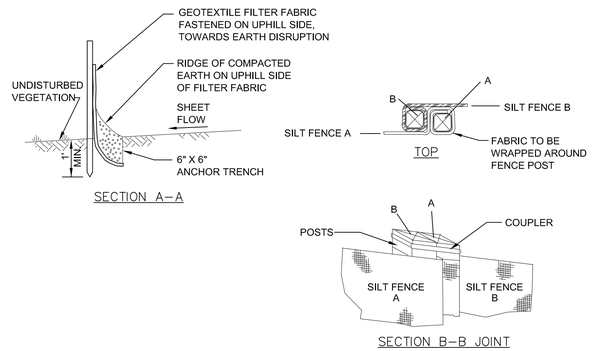

SILT FENCE

NOT TO SCALE

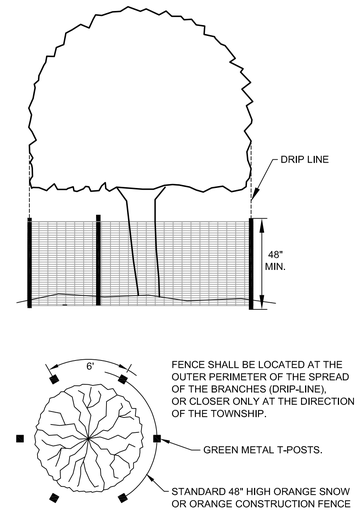

NOTES:
1. ALL TREES TO BE REMOVED WILL BE IDENTIFIED BY RED FLAGGING.
2. TREE PROTECTION FENCING IS TO BE ERECTED PRIOR TO ANY EARTHWORK OR CONSTRUCTION AND IS TO REMAIN IN PLACE UNTIL CONSTRUCTION AND GRADING IS COMPLETE.
3. ALL DEBRIS, FILL, EQUIPMENT OR MATERIAL IS TO BE KEPT CLEAR OF AREA WITHIN PROTECTIVE FENCE. NO CLEANING OF EQUIPMENT OR MATERIAL OR STORAGE OR DISPOSAL OF ANY MATERIAL WITHIN THE DRIP LINE OF ANY TREES TO BE SAVED.

TREE PROTECTION FENCE DETAIL

NOT TO SCALE

PITTSFIELD CHARTER TOWNSHIP
SOIL EROSION AND SEDIMENTATION CONTROL NOTES
GENERAL

1. The contractor shall implement and maintain the soil erosion control measures as shown on the plans at all times during construction on this project. Any modifications or additions to the soil erosion control measures due to construction or changed conditions, shall be complied with as required or directed by the owner, project engineer or Pittsfield Township.
2. All soil erosion and sedimentation control work shall conform to the permit requirements of Pittsfield Township and the laws of the State of Michigan.
3. A NPDES construction activity permit is required for all sites greater than 5 acres.
4. Daily inspections shall be made by the contractor. Periodic inspections may be made by the owner/project engineer/Township to determine the effectiveness of erosion and sedimentation control measures. Any necessary corrections shall be made without delay.
5. Erosion and sedimentation from work on the site shall be contained on the site and not be allowed to collect on any off-site areas or in waterways.
6. All mud/dirt tracked onto roads from the site due to construction, shall be promptly removed by the contractor.
7. Restoration of all disturbed areas, including placement of topsoil, seed, fertilizer and mulch and/or sod shall be done within 5 days of the completion of final grade.
8. Construction operations shall be scheduled and performed so that preventative soil erosion control measures are in place prior to excavation in critical areas and temporary stabilization measures are in place immediately following backfilling operations.
9. Special precautions will be taken in the use of construction equipment to prevent situations that promote erosion.
10. Proper dust control shall be maintained during construction by use of water trucks and/or chloride as required.
11. The contractor shall be responsible for maintaining all temporary soil erosion control measures and removal of some upon authorized completion of project. Completion of project will not be authorized until all site work, home building, road work and utility construction is complete and all soils are stabilized.
12. The contractor shall not grade in existing wetland or conservation areas to be protected. Silt fence shall be installed and maintained adjacent to existing wetland and conservation areas to prevent grading, erosion and sedimentation into them.
13. Tree protection fencing must remain intact until restoration of the site is complete.

SEQUENCE OF CONSTRUCTION

1. Install sediment fence and tree protection fencing prior to any grading operation.
2. Install mud-tracking pad.
3. Construct temporary sediment/detention basin.
4. Place topsoil, fertilizer, seed and mulch over the entire detention basin area.
5. Rough grade site, stockpile topsoil and begin building construction.
6. Install storm drainage system including riprap and parking lot inlet filters and detention basin standpipe.
7. Maintain erosion and sedimentation control measures, as required.
8. Install sanitary sewer and water systems.
9. Bring pavement areas to sub-base grade, place sub-base and bituminous pavement.
10. Install franchised utilities.
11. Finish grade, redistribute topsoil, seed and mulch all disturbed areas.
12. Remove any accumulated sediment within the detention basin and replace clean washed stone around standpipe.
13. Complete construction of site.
14. Insure all soil is stabilized. Remove all temporary soil erosion control measures.

SEEDING/SOD

1. Seed or sod in accordance with project specifications.
2. All areas of disturbed earth that are not to be paved or sodded shall have 4 inches of topsoil, seed, fertilizer and mulch.
3. Immediately after seeding, mulch all seeded areas with unweathered small grain straw (preferably wheat) or hay spread. Spread uniformly at the rate of 1 ½ to 2 tons or 100 pounds (2 to 3 bales) per 1,000 square foot. This mulch should be anchored with a disc-type mulch-anchoring tool.
4. Any disturbed area not paved, seeded or mulched, sodded or built upon by November 15, is to be mulched in the manner as specified above, in order to provide soil erosion protection during the winter and early spring.
5. All erosion and sedimentation control prevention procedures and structures are to comply with the Standards and Specifications for soil erosion and sediment control of the Washtenaw County Soil Conservation District.
6. Drainage ditches and slopes steeper than 1:4 (25%) shall be stabilized with erosion control blankets.
7. Steep slopes that do not take upon initial seeding must be re-seeded and stabilized with erosion control blankets.
8. Where excavation has been through lawn areas, the CONTRACTOR shall restore the disturbed area by placing topsoil and seeding or sodding over the final backfill material.

CATCH BASIN/MANHOLE PROTECTION

1. Protect storm sewer catch basins with Siltsack. or approved equivalent as follows:

ROADS

1. During construction, all roads shall be protected from unvegetated areas washing onto road surfaces by placement of silt fence behind curb or a 10 foot wide straw mulch bank behind the curb or other approved method and/or as shown on the plans.
2. During construction of any portion of the project, roads shall be maintained free of dirt, silt and construction debris.

Pittsfield SEC 9/22/2009

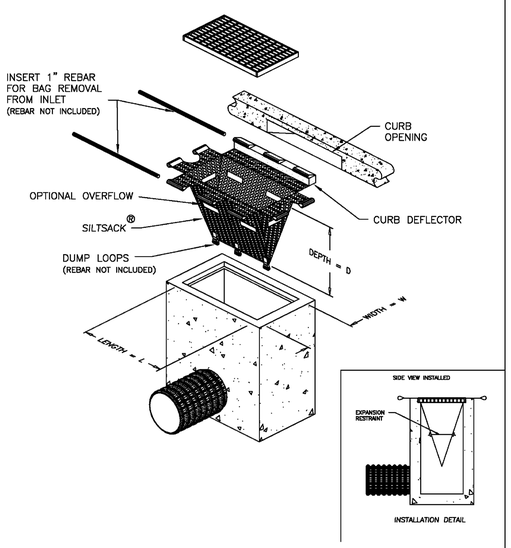

DETAIL OF INLET SEDIMENT CONTROL DEVICE
TYPE B – WITH CURB DEFLECTOR

ACF Environmental
Your Complete Source for Geosynthetic Solutions

ACF Environmental, Inc.
2831 Cardwell Rd.
Richmond, Virginia 23234
(800) 448-3636

SILTSACK®
SPECIFICATIONS

NOTE: THE SILTSACK® WILL BE MANUFACTURED FROM A WOVEN POLYPROPYLENE FABRIC THAT MEETS OR EXCEEDS THE FOLLOWING SPECIFICATIONS.

REGULAR FLOW SILTSACK®
(FOR AREAS OF LOW TO MODERATE PRECIPITATION AND RUN-OFF)

PROPERTIES	TEST METHOD	UNITS
GRAB TENSILE STRENGTH	ASTM D-4632	300 LBS
GRAB TENSILE ELONGATION	ASTM D-4632	20 %
PUNCTURE	ASTM D-4833	120 LBS
MULLEN BURST	ASTM D-3786	800 PSI
TRAPEZOID TEAR	ASTM D-4533	120 LBS
UV RESISTANCE	ASTM D-4355	80 %
APPARENT OPENING SIZE	ASTM D-4751	40 US SIEVE
FLOW RATE	ASTM D-4491	40 GAL/MIN/SQ FT
PERMITTIVITY	ASTM D-4491	0.55 SEC -1

* HI-FLOW SILTSACK®
(FOR AREAS OF MODERATE TO HEAVY PRECIPITATION AND RUN-OFF)

PROPERTIES	TEST METHOD	UNITS
GRAB TENSILE STRENGTH	ASTM D-4632	265 LBS
GRAB TENSILE ELONGATION	ASTM D-4632	20 %
PUNCTURE	ASTM D-4833	135 LBS
MULLEN BURST	ASTM D-3786	420 PSI
TRAPEZOID TEAR	ASTM D-4533	45 LBS
UV RESISTANCE	ASTM D-4355	90 %
APPARENT OPENING SIZE	ASTM D-4751	20 US SIEVE
FLOW RATE	ASTM D-4491	200 GAL/MIN/SQ FT
PERMITTIVITY	ASTM D-4491	1.5 SEC -1

OIL-ABSORBANT SILTSACK®
(FOR AREAS WHERE THERE IS A CONCERN FOR OIL RUN-OFF OR SPILLS)

DEPENDING ON YOUR PARTICULAR APPLICATION, THE SILTSACK CAN BE MADE FROM EITHER ONE OF THE ABOVE FABRICS WITH AN OIL-ABSORBANT PILLOW INSERT OR, MADE COMPLETELY FROM AN OIL-ABSORBANT SILTSACK #WITH A WOVEN PILLOW INSERT.

(* HI-FLOW SILT SACK SHALL BE USED FOR ALL APPLICATIONS WITHIN PITTSFIELD TOWNSHIP)

SILTSACK DISTRIBUTORS:
PRICE & COMPANY
(www.priceandcompany.com)

METRO GRAND RAPIDS, MI
426 36TH STREET SW
WYOMING, MI 49548-2108
1-800-248-8230

METRO DETROIT, MI
29165 WALL STREET
WIXOM, MI 48393-3525
1-866-960-4300

SILTSACK

NOT TO SCALE

Pittsfield Charter Township
6201 W. Michigan Ave.
Ann Arbor, MI 48108–9721
48108–9721
Tel. 734.822.3101
www.pittsfield-mi.gov

Revision	By	Appd.	YY.MM.DD
SILTSACK	BWA	DRW	12.01.03
TWP REV	BWA	DRW	11.04.27
UPDATES	TTN	DRW	10.01.20

Issued	By	Appd.	YY.MM.DD
File Name: SE–01	TTN	DRW	07.10.01
	Dwn.	Chkd.	Dsgn. YY.MM.DD

Permit-Seal

Client/Project
PITTSFIELD TOWNSHIP

Pittsfield Township, Michigan

Title
SOIL EROSION DETAILS AND NOTES

Project No. 2075001300

Scale NOT TO SCALE

Revision 1

Earthwork

1.00 GENERAL

1.01 DESCRIPTION

A. The CONTRACTOR shall perform all excavation and backfilling necessary to complete the work. This shall include the excavation of earth and rock, the removal and disposal of unsuitable material, dewatering, placement of suitable fill and backfill material, pipe boring and jacking, all quality assurance testing, and the restoration and final grading for all earth surfaces.

1.02 WORK WITHIN RIGHTS-OF-WAY

A. Where the governmental bodies having jurisdiction of the streets or rights-of-way have specific specifications relating to the requirements for work within their jurisdiction, such requirements must be met as a minimum requirement, and if these Specifications impose further limitation on the work, they shall also be met as the required work standard.

B. During all operations of the CONTRACTOR in the streets and roadways, the CONTRACTOR shall maintain barricades, lights, and warning signs as required by the agency having jurisdiction.

1.03 WORK WITHIN EASEMENTS

A. During construction within any easements, the CONTRACTOR shall confine himself to the limits shown on the Plans. He shall notify property owners in advance of moving equipment on easements and use of the access routes which will be designated by the OWNER. The OWNER will cooperate in working out the details of access. The topsoil over the trench shall be removed and carefully replaced upon completion of the work. The backfill of the trench in the easement may be left slightly high to provide for any slight residual settlement. Any trees, shrubs, or bushes removed shall be replaced to the satisfaction of the property owner.

1.04 SOIL BORINGS

A. Soil boring results, if taken on a site, are appended to these Specifications with locations noted. Boring logs are shown to be generally representative of the site and to assist in the design and construction of the work.

2.00 PRODUCTS

2.01 BACKFILL MATERIAL

A. For areas not requiring "granular backfill" material, backfill shall be of the excavated material, with the exception that materials such as soft clay, topsoil, muck, cinders, vegetable matter, refuse, boulders and other objectionable and non-packing earth shall be excluded from the backfill and removed from the site. Stone larger than 3 inches in any dimension shall be excluded from the backfill and removed from the site by the CONTRACTOR.

B. Where "granular material" backfill is required as specified herein, backfill material shall be defined as a material meeting granular material Class II as defined in 2003 MDOT 902.08.

C. All utilities within road right-of-way corridor (existing or proposed) shall be backfilled with MDOT CL II granular material compacted to 95% maximum unit weight.

D. All utilities shall be installed with 2 NS sand bedding or better.

2.02 ENCASING PIPE

A. Steel encasing pipe for boring and jacking shall conform to the requirements of either, ASTM A53, Type E or S, Grade B or ASTM A139, Grade B.

B. Steel encasing pipe used under channels and highways shall meet the requirements of the governmental agency having jurisdiction and the following minimum requirements;

Nominal Diameter (Inches)	Maximum Wall Thickness
Under 13	0.188 inches
13-24	0.250 inches
25-36	0.312 inches
42	0.438 inches
48	0.500 inches
54	0.563 inches

C. Steel encasing pipe used under railroads shall meet the requirements of the railroad and the following minimum requirements:

	Minimum Wall Thickness (inches)	
Nominal Diameter (Inches)	Coated or Cathodically Protected	Uncoated & Unprotected
Under 14	0.180	0.251
14-16	0.219	0.282
18	0.250	0.313
20	0.281	0.344
22	0.312	0.375
24	0.344	0.407
26	0.375	0.438
28-30	0.406	0.469
32	0.438	0.501
34-36	0.469	0.532
38-42	0.500	0.563
48	0.563	0.626

D. Casing pipe joints shall be welded to form a leak-proof continuous casing.

E. The inside diameter of casing pipe shall be at least 2 inches greater than the largest outside diameter of the carrier pipe joints or couplings for carrier pipe less than 6 inches in diameter, and at least 4 inches greater than the largest outside diameter of the carrier pipe joints for carrier pipe 6 inches and over in diameter, unless otherwise shown on the Plans.

F. The steel casing pipe shall be of smooth interior and shall be placed accurately to line and grade, allowing for the encased pipe thickness and supports under each length of encased pipe.

3.00 EXECUTION

3.01 GENERAL EXCAVATION

A. Excavation shall be performed by any practicable method consistent with the integrity and protection of the work and neighboring structures, workmen, and the public. Topsoil shall be separately removed and stockpiled for reuse.

B. All excavation, except where necessary to tunnel, bore or jack under roads, railroads, tree roots and other obstructions within the limits indicated on the Plans, may be open cut from the surface. Tunneling or boring under trees shall be considered as incidental to construction and will not be considered as cause for request for additional payment.

C. Foreign material or unsuitable foundation material encountered such as wood, boulders, etc., which obstruct the excavation, shall be removed. Such materials found at the bottom of the excavation shall be removed and the foundation restored with approved materials.

D. If excess excavation is made or the material becomes disturbed so as to require removal beyond the prescribed limits, the resulting space shall be filled with selected material solidly tamped into place, in not more than 6-inch layers to the satisfaction of the ENGINEER, before the construction work proceeds. At the direction of the ENGINEER, the excess excavation may be filled with 2000 psi concrete at the CONTRACTOR's expense.

E. The excavation shall be kept dry during the work. Where water is encountered in the excavation, it shall be removed by pumping or well points. All necessary precautions shall be taken to prevent damage to existing wells and to completed or partially completed structures. The CONTRACTOR shall be responsible for all damages caused by him due to inadequate or improper protection.

F. The CONTRACTOR shall take ample precautions to protect all trees and ornamental shrubbery not within the limits of the construction areas, or within the construction areas shown on the Plans to be retained from injury by workmen, equipment, or any other agencies connected with the work, including subcontractors. Such protection shall be provided during the progress of the excavation, grading, or other phases of the work as necessary. Such trees or shrubbery shall be surrounded by protective posts or fencing before construction begins, when in judgment of the ENGINEER, such precautionary measures are necessary. If, as a result of any phase of the work, trees are damaged or it is necessary to remove limbs in the way of construction, the repair of the damage and such limb removal shall be done by the CONTRACTOR as directed by the ENGINEER. All costs for the protective work shall be borne by the CONTRACTOR as incidental to the Contract work.

G. Any excavation not backfilled at the end of each day must be clearly marked and surrounded by appropriate safety fencing as directed by the ENGINEER. If directed by the ENGINEER, the CONTRACTOR shall cover the open excavation with a steel plate and light the excavated area.

3.02 EXCAVATION FOR SEWERS AND WATER MAINS

A. Trenches shall be excavated to the depth required with allowance for bedding the pipe. The trench shall be cut wider and deeper at each pipe joint location to provide for properly completing the pipe joint and to relieve the joint of all loadings.

B. The width of the trench at the top of a rigid pipe shall be sufficient to allow the pipe to be laid and jointed properly and shall provide for a minimum net clearance of 6 inches and a maximum net clearance of 12 inches on each side of the barrel of the pipe and to allow the backfill to be placed and properly compacted.

C. The width of trench at the top of a flexible pipe backfill when using concrete bedding shall be sufficient to allow the pipe to be laid and jointed properly with the minimum net clearance of 12 inches and a maximum net clearance of 18 inches on each side of the barrel of the pipe.

D. Where the conditions of the ground require or where the work is in close proximity of existing structures, the sides of excavation shall be securely held by bracing and/or sheeting which may be removed in units when the level of the backfill has reached a point where it is safe to pull the sheeting without disturbing the protected feature. No sheeting, bracing, or other timber shall be left in the excavation upon the completion of the main or other structures, except with the specific review and direction of the ENGINEER.

E. Other underground mains, sewers or structures encountered in the excavation shall be adequately supported during the CONTRACTOR's operations, and before backfilling, shall be given permanent support as directed by the ENGINEER to meet the standards or requirements of the owning utility or agency.

F. Water, sewer, gas and other utility services disturbed by the CONTRACTOR in his operations shall be repaired or replaced in a manner equal to the original condition by the CONTRACTOR at his own expense. Where these services are encountered and are undamaged, they shall be supported and/or protected by the CONTRACTOR at his expense against later settlement and/or damage after backfill. The CONTRACTOR shall consult the agency or the utility firm having jurisdiction over any duct line, gas main, etc., which may cross the excavation to determine method of supporting such duct or pipe.

G. All excavated material shall be piled in a manner that will not endanger the work and that will avoid obstructing sidewalks and driveways. Hydrants under pressure, valve manhole covers, valve boxes, curb stop boxes, fire and police call boxes, or other utility controls shall be left unobstructed and accessible until the work is completed. Gutters shall be kept clean, or other satisfactory provisions made for street drainage, and natural water courses shall not be obstructed except as otherwise provided for herein on a temporary basis.

3.03 EXCAVATION FOR STRUCTURES

A. Excavation for structures shall be extended sufficiently beyond the limits of the structure to provide ample room for form construction and for practicable construction methods to be followed.

B. Requirements for excavation of sewers and water mains shall also apply to this Section.

3.04 EXCAVATION FOR PAVED SURFACES

A. In excavating around manholes and catch basins or inlets, care shall be exercised to avoid removing the casings and pushing dirt into the structures. Dirt pushed into manholes, catch basins or inlets by the CONTRACTOR's operations shall be immediately removed so that the dirt will not be carried into the sewer by the flow of sewage or storm water.

B. The CONTRACTOR shall take ample precautions to protect all trees and ornamental shrubbery not within the limits of the construction area, or within the construction areas shown on the Plans to be retained from injury by workmen, equipment, or any other agencies connected with the work, including subcontractors. Such protection shall be provided during the progress of the excavation, grading, or other phases of the work as necessary. Such trees or shrubbery shall be surrounded by protective posts or fencing before construction begins, when in the judgment of the ENGINEER, such precautionary measures are necessary. If, as a result of any phase of the work, trees are damaged or it is necessary to remove limbs in the way of construction, the repair of the damage and such limb removal shall be done by the CONTRACTOR as directed by the ENGINEER. All costs for the protective work shall be borne by the CONTRACTOR as incidental to the Contract work.

3.05 ROCK EXCAVATION

A. Rock excavation shall consist of excavating igneous, metamorphic and sedimentary rock which cannot be excavated without continuous drilling and blasting or drilling and splitting to fracture the rock. Blasting shall be permitted only after it has been shown that other methods of excavation are impractical. All rock excavation shall be carried to a minimum depth of 8 inches below the pipe or manhole bottom and to the bottom of all footings. The width of the rock excavation shall not exceed the diameter of the pipe plus 12 inches on either side or the edge of the foundation footing.

B. When the use of explosives is necessary for the progression of the work, the CONTRACTOR shall comply with all laws, ordinances and applicable safety code requirements and regulations relative to the handling, storage and use of explosives and protection of life and property. A person competent and experienced in the use of explosives shall be employed to supervise the work. The CONTRACTOR shall schedule all blasting for a definite hour of the day and shall so notify all residents and businesses in the area as to the scheduled day and hour for such blasting operations. Explosive materials shall not be stockpiled and stored in residential areas. Explosives and initiating devices shall not be carried in the same vehicle.

C. Suitable weighted plank coverings or timber mats shall be provided to confine all materials lifted by blasting within the limits of the excavation of trench. Excessive blasting or overshooting shall not be permitted. Any material outside of the authorized excavation cross section which may be shattered or loosened shall be removed at the CONTRACTOR's expense. The CONTRACTOR shall be responsible for all damage resulting from the use of explosives.

3.06 PIPE BORING AND JACKING

A. The CONTRACTOR shall obtain all necessary permits for jacking the encasing pipe under channels, highways and/or railroads and shall notify the governmental agency and/or company having jurisdiction 48 hrs before work at any crossing is started. The CONTRACTOR shall pay all costs for an inspector and/or flagmen required by a railroad or governmental agency.

B. A suitable approach trench shall be opened, adjacent to the toe of the slope of the embankment. The approach trench shall be long enough to accommodate the length of pipe units to be placed, and wide enough to provide sufficient working room. Guide timbers or rails for keeping the pipe on-line and grade shall be installed in the bottom of the trench and heavy timber backstop supports installed at the rear of the trench to take the thrust of the jacks. A timber bearing a "pushing frame" shall be built and furnished to fit or match the end of the pipe to be jacked, so that the pressure of the jacks will be evenly distributed over the end of the pipe. Two (2) hydraulic jacks of sufficient power shall be used to apply pushing or jacking pressure. For firm ground, excavation shall be carried on from inside the pipe, not to exceed twelve (12) inches ahead of the lead pipe. For unstable ground, the lead pipe shall precede the auger. Excavation at the top and sides shall be accurately cut to line and grade. Adjoining sections of steel pipe shall be welded. Pipe shall be jacked on successive shifts until completed to guard against the "freezing of the line" due to settlement and compaction of surrounding soil.

C. The sheeting of pits along any road will be required if the leading edge of all work pits will be closer to the pavement edge than the shoulder point or ten (10) ft, which ever distance is greater, or on curb and gutter sections, at least five (5) ft from back of curb.

D. Upon completion of the installation of the steel pipe encasement, the contractor shall furnish and install a bolted style casing spacer as described below on the carrier pipe. Casing spacers shall be placed a maximum of seven (7) feet apart along the length of the carrier pipe with one casing spacer within 2-1/2 feet of each side of a pipe joint and the rest evenly spaced. Wood skids are not an acceptable method of supporting the carrier pipe.

1. Casing spacers for carrier pipes from 4" - 24" shall be made of a molded, segmented high density polyethylene plastic with 304 stainless steel connecting nuts and bolts. Minimum spacer width shall be 5.2" for carrier pipes from 4" - 12" and 7.0" for carrier pipes 14" - 24". Each casing spacer shall have at least six (6) integrally molded skids extending 1" beyond the bell or mechanical joint of the carrier pipe. The casing spacers shall be equal to the PSI Ranger as manufactured by Pipeline Seal and Insulator, Inc., Houston, TX.

2. Casing spacers for carrier pipes larger than 24" shall be a PVC fusion bonded coated (10-16 mils) steel shell (minimum 14 gauge steel) with a 90 mil PVC inner liner and 2" wide 30% glass reinforced polyester runners (minimum compressive strength = 18,000 psi) (polyethylene is not an acceptable runner material) attached by 3/8" coated steel studs welded to the steel shell. All bolts and nuts used to fasten the shell to the carrier pipe shall be cadmium plated steel. Where riser are required under the runners they shall be a minimum 10 gauge steel welded to the shell and coated as specified for the shell (epoxy is not an acceptable coating for the shell riser). The casing spacers shall be equal to the PSI Model C as manufactured by Pipeline Seal and Insulator, Inc., Houston, Texas.

E. Boring shall be performed by accepted and recognized methods which will provide adequate safety and protection at all times to workmen employed in the work and to inspectors and others involved in the construction.

F. If voids should develop around the outside of the encasing pipe, grouting or other methods approved by the ENGINEER shall be employed to fill such voids.

G. After the pipes are tested satisfactorily, the remaining space between the carrier pipe and the encasing pipe shall be pressure grouted or otherwise filled with concrete. The carrier pipe shall be adequately braced to prevent floating or movement of the pipe.

3.07 SHORING, SHEETING AND BRACING

A. Where sheet piling, shoring, sheeting, bracing, or other supports are necessary, they shall be furnished, placed, maintained, and except as shown or specified otherwise, removed by the CONTRACTOR.

B. All sheet piling, shoring, sheeting and bracing shall be designed by a professional engineer engaged by the CONTRACTOR with demonstrated competence and experience in such work. The sheeting system shall be designed to prevent bottom failure and hydrostatic uplift within the excavation. Provision shall also be made in the design for lateral pressures due to side slope and construction equipment or other surcharge loads, as applicable.

C. The CONTRACTOR shall provide to the ENGINEER for his review, design calculation and arrangement drawings of the sheeting system prior to ordering any materials for bracing, sheeting, etc., and prior to the commencement of the excavation.

D. All materials, except as otherwise specified, used for sheeting and sheet piling, lagging, braces, shores, and stringers, or waling strips shall be of approved quality and dimensions throughout.

E. Materials for sheeting systems shall be furnished and driven or set in place by the CONTRACTOR, where necessary or wherever ordered by the ENGINEER, whether the same is or is not considered necessary by the CONTRACTOR. If, in the opinion of the ENGINEER, the materials furnished by the CONTRACTOR are not of proper quality or sufficient size or not properly placed to ensure the safety of the work or of adjacent structures and property, the CONTRACTOR shall, upon notice from the ENGINEER to that effect, forthwith procure, furnish and set in place or drive other and satisfactory materials, or place the material in a satisfactory manner; and if he shall fail or neglect to do so, the ENGINEER may order all or any part of the work to be stopped until such materials so used are furnished and placed; and the CONTRACTOR shall not be entitled to claim, demand, or receive any compensation for larger size or better quality or different disposal of materials ordered by the ENGINEER, nor any compensation for allowance of any kind whatsoever for or on account of any damage or delay resulting from such stoppage of work.

F. Steel sheet piling may be either new or used. It shall be of adequate strength, straight and properly braced. Steel sheet piling shall be of the interlocking type. Friction in the interlocks shall not be assumed to contribute to the strength of the sheet piling.

G. The design, planning, installation and removal, if required, of all sheet piling, shoring, sheeting, and bracing shall be accomplished in such a manner as to maintain the required excavation or trench section and to maintain the undisturbed state of the soils below and adjacent to the excavation.

H. Steel sheet piling for the excavation shall be driven straight and in-line. The piling shall be supported above ground, before driving, by a guide frame at least 20 ft high which will keep the piling accurately in the required position and vertical. Each piece of piling shall be driven only a few feet at a time and driving shall proceed continuously around the perimeter so that the piles shall reach their full penetration together.

I. Walers and bracing shall be supplied and installed as required to complete the sheeting system. Walers and braces shall be of adequate strength for the load imposed. Splices in walers shall develop the full strength of the member in bending, shear, and axial compression.

J. If bracing members are to be removed during construction, the timing and procedure for removal shall not induce excessive stresses in the permanent structures or in steel sheet piling and bracing members.

K. If the construction sequence of structures requires the transfer of bracing to the completed portions of any structure, the CONTRACTOR shall secure written acceptance of the ENGINEER prior to the installation of such bracing.

L. In trenching operations the use of horizontal strutting below the barrel of pipe or the use of the pipe as support for trench racing will not be permitted. The use of a travelling shield for sewer construction shall require that the device be approved for use by a professional engineer. Sheet piling and timbers in trench excavations shall be withdrawn in a manner so as to prevent subsequent settlement of the pipe or additional backfill loadings which might overload the pipe.

M. The neglect, failure, or refusal of the ENGINEER to order the use of sheeting, or sheet piling or steel, or to order the same to be left in place, or the giving or failure to give of any order or directions as to the manner or methods of driving or placing sheeting, sheet piling, bracing, shores, etc., shall not in any way relieve the CONTRACTOR of any or all obligations under this Contract. Sheeting left in place shall be cut off one (1) ft below existing grade.

N. The rules of the OSHA and the State Department of Labor with respect to excavation and construction shall at all times be strictly observed.

3.08 GENERAL BACKFILLING

A. For all areas, unless otherwise noted, backfilling shall consist of placing excavated material as defined in Paragraph 2.01.A. of this Section, in 12-inch lifts to finish grade. Compaction of backfill shall be such as to obtain 90% of the maximum density.

B. Under pavements, curb, paved driveways, and sidewalks, and where pipe is within a one on one influence of pavement, compaction testing shall be performed by an independent testing laboratory. Testing shall be performed at intervals of one test per lift per 50 feet of trench or as determined necessary by the ENGINEER.

C. In residential developments, all backfill within the road corridor shall be granular material compacted in layers not to exceed 12 inches loose thickness with backfilling carried up to subgrade. Compaction of backfill shall be as such to obtain 95% of the maximum unit density as determined at the optimum moisture content. For purposes of this section, the road corridor is defined as front of house to front of house, including right-of-way and adjacent easements and setbacks.

3.09 BACKFILLING FOR SEWERS AND WATER MAINS

A. Backfilling shall consist of placement of the prescribed materials from a level 12 inches above the crown of the pipe. Placement shall be as follows:

1. Under gravel driveways, gravel roads and shoulders, the backfill shall be granular material which shall be solidly compacted by mechanical tamps in layers of not more than 12 inches loose thickness with backfilling carried up to within 12 inches of finished grade. Compaction of backfill shall be such as to obtain 95% of the maximum unit density as determined at the optimum moisture content.

2. Under pavements, curb, paved driveways, and sidewalks, the backfill shall be granular material compacted in layers not to exceed 12 inches loose thickness with backfilling carried up to subgrade. Compaction of backfill shall be such as to obtain 95% of the maximum unit density as determined at the optimum moisture content. After a period of about 60 days or less, if the backfill compaction is satisfactory to the ENGINEER, to provide for any slight settlement, the CONTRACTOR shall retrim neatly any broken edges of pavement and replace the top surface of the backfill within the pavement area with pavement surface equal to that surface which was removed. The pavement shall be replaced in accordance with the standard specifications of the agency having jurisdiction.

3. Backfill around lift stations, or buried underground structures shall be granular material compacted in 12-inch lifts. Compaction of backfill shall be such as to obtain 95% of the maximum unit density as determined at the optimum moisture content.

4. For all other areas, backfilling shall consist of placing excavated material as defined in Paragraph 2.01.A. of this Section, in 12-inch lifts to finish grade. Compaction of backfill shall be such as to obtain 90% of the maximum unit density as determined at the optimum moisture content.

3.10 FILLING AND BACKFILLING FOR STRUCTURES

A. Embankments underlying structural footings, streets and drives, sidewalks and around structures shall be granular material meeting the requirements of the Michigan Department of Transportation for granular material compacted to 95% density.

B. In all other areas, material required for embankments and backfilling shall be soil or soil-rock mixture free of organic and other deleterious matter and shall contain no more than 15% rocks or lumps larger than 2-1/2 inches in the greatest dimension, compacted to 90% density.

C. Under all interior and exterior floor slabs, an 8-inch thick granular cushion shall be placed. This material shall be clean mineral aggregate meeting the following gradation requirements:

Passing the No. 4 Sieve	100%
Passing the No. 200 Sieve	0-3%

D. Where embankment material is placed to achieve a new surface elevation, the top 4 inches shall be approved topsoil either salvaged from the site or hauled in by the CONTRACTOR.

3.11 FILLING AND BACKFILLING FOR PAVED SURFACES

A. Embankments, including sand cushions and granular fills, shall be placed in successive layers not more than 6 inches in depth the full width of the cross section, each layer to be thoroughly compacted by means of vibratory compactors or by an approved pneumatic-tired roller or combination thereof, as required by the ENGINEER. Each layer shall be compacted to not less than 95% of the maximum unit density as determined at the optimum moisture content. All parts of the embankment shall be uniformly compacted and the CONTRACTOR shall so direct all earthmoving equipment used in the work so that the same shall be attained. Embankment or fill outside the limits of the subgrade where sand or gravel is not required shall be made with suitable material which is free from perishable organic matter, rubbish, stones, broken concrete, roots, or other foreign materials, at no additional compensation. Before any embankments are begin, the base shall be made firm and cleared of topsoil, sod or other perishable material. The sides of the embankment shall be neatly and evenly dressed to the slope shown on the Plans, or such other slope as the ENGINEER may direct.

B. Upon completion of the placing of the curbs, and after the concrete has cured sufficiently, forms shall be removed and the excavated space behind the curb shall be backfilled with a good quality of surface soil, free of rubbish, stone, broken concrete, roots or other foreign material. Where adequate acceptable material for backfill behind the curb is not available, granular fill conforming to 2003 MDOT 8.02.06, Class II, shall be used. Where the area behind the curb is in cut, it shall be trimmed from the top of the curb on the slope shown on the Plans. If the area is in embankment or fill, an earth berm shall be placed immediately adjacent to the top of the curb and then the embankment of fill shall be finished to the slope shown on the Plans. All trimming and finishing shall be done in a neat, workmanlike manner. All excess concrete and debris shall be removed from the excavation behind the curb line before backfilling begins.

C. In construction of non-rigid pavements, backfilling back of curb and gutter shall be completed before placement and compaction of the base course of the roadway.

3.12 PREPARATION OF SUBGRADE FOR ROADWAY SURFACES

A. The bottom of the excavation for the pavement or top of the fill shall be known as the pavement subgrade and shall be smoothed, trimmed and compacted to the required line, grade and cross section to receive the road metal. It shall be thoroughly compacted by rolling with a roller of approved type weighing not less than 8 tons. The subgrade shall be compacted to at least 95% of the maximum density as designated by the test method AASHTO T-180. Inaccessible areas, where rolling is not practical, shall be thoroughly compacted by mechanical tampers capable of striking a blow equivalent to at least 250 foot-pounds per square foot. The subgrade thus formed shall be maintained in a smooth and compacted condition until the pavement has been placed. No base course, surfacing, curb, or curb and gutter, shall be placed until the subgrade has been reviewed by the ENGINEER. The subgrade shall be finished in an acceptable condition at least one day in advance of the pavement construction at all times. Six inches of compacted depth of granular material shall be used where uncompactable soil is encountered. The granular fill shall conform to the 2003 MDOT 9.02.08., Class II, compacted to 95% of its density.

B. Immediately prior to placing the pavement, the subgrade shall be tested for conformity with the cross section shown on the Plans by means of an approved template riding on the curb and gutter sections or on side forms. If necessary, materials shall be removed or added, as required, to bring all portions of the subgrade to the correct elevation. Corrected portions shall then be thoroughly compacted and again tested with the template. Pavement material shall not be placed at any portion of the subgrade which has not been tested for correct elevation.

C. The finished subgrade shall be maintained in a smooth and compacted condition until the pavement is placed. No storage piles of fine or coarse aggregate shall be placed directly upon the finished subgrade. Should the subgrade become rutted or disturbed in any manner, it shall be reshaped and recompacted.

3.13 GRADING

A. The CONTRACTOR shall grade the site to achieve the elevations as shown on the Plans. All disturbed areas beyond the grading limits shall be restored to prior condition.

B. Surplus excavated material not needed for embankment shall be disposed of by the CONTRACTOR. Headwalls, culverts, drains, sewers and appurtenances filled or damaged by the CONTRACTOR during the course of his operations shall be cleaned, repaired, or replaced at his expense.

C. All temporary earth changes shall be in conformance with the Soil and Erosion Control Act.

3.14 RESTORATION

A. Headwalls, culverts, and drainage systems filled or damaged by the CONTRACTOR during the course of his operations shall be cleaned, relaid or rebuilt with new materials to a condition equal to the original state, and of thickness equal to the original structure and to the original line and grade at the CONTRACTOR's expense.

B. Where the excavation is located beside a ditch and/or where an existing ditch is filled or disturbed in the CONTRACTOR's operations, the CONTRACTOR shall clean, repair, or replace the ditch with properly pitched bottom and side slopes and of section and capacity not less than the original section.

C. Where excavation has been through lawn areas, the CONTRACTOR shall restore the disturbed area by placing topsoil and seeding or sodding over the final backfill material.

D. The CONTRACTOR shall remove excess dirt and other construction material from the site of the work and leave the site in a condition equal to its original state.

E. The final condition of the streets and roadways shall be subject to the approval of the governmental body having jurisdiction thereof, as well as review by the ENGINEER.

PITTSFIELD CHARTER TOWNSHIP

Pittsfield Charter Township
6201 W. Michigan Ave.
Ann Arbor, MI 48108-9721
48108-9721
Tel. 734.822.3101
www.pittsfield-mi.gov

TWP REV	BWA	DRW	11.04.27
UPDATES	TTN	DRW	10.01.20
Revision	By	Appd.	YY.MM.DD

Issued	By	Appd.	YY.MM.DD

File Name: SE-02	TTN	DRW	DRW	07.10.01
	Dwn.	Chkd.	Dsgn.	YY.MM.DD

Permit-Seal

Client/Project
PITTSFIELD TOWNSHIP

Pittsfield Township, Michigan

Title
EARTHWORK SPECIFICATIONS

Project No. 2075001300

Scale NOT TO SCALE

Revision 1

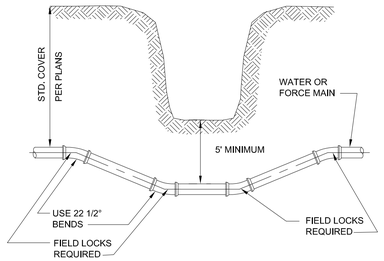

DITCH & STREAM CROSSING

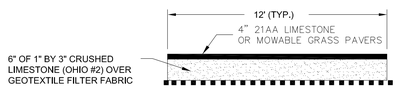

SANITARY SEWER ACCESS PATH

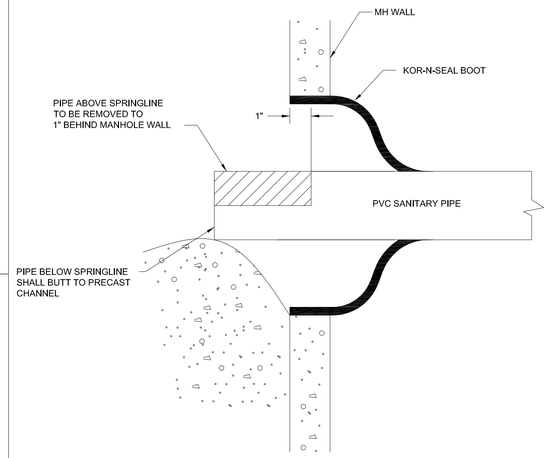

SANITARY PIPE PENETRATION

NOTES:

1. SECURE DROP PIPE TO MANHOLE WALL WITH RELINER-DURAN, INC STAINLESS STEEL ADJUSTABLE CLAMPING BRACKETS OR EQUAL.
2. ATTACH THE DROP BOWL & EACH CLAMPING BRACKET TO THE MANHOLE WALL WITH 3/8" x 3 3/4" RAMSET/RED HEAD BOLTS HELD INPLACE WITH 2 STAGE EPOXY PASTE.

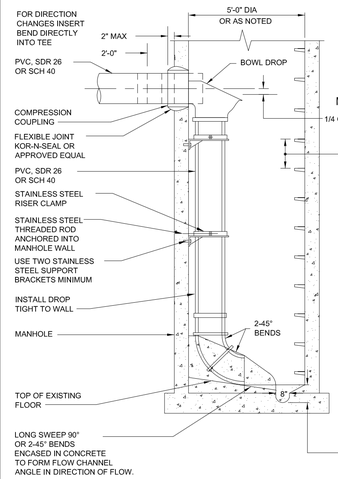

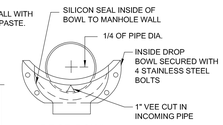

DROP BOWL
MOUNTING POSITION

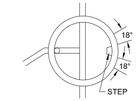

DROP SHALL
BE NO CLOSER
THAN 18" FROM
STEP

SIZE

LINE	LINE
4"	4"
6"	6"
8"	8"
10"	8"

MH DIA.	MAX. DROPS
4'	2-6"
5'	4-6"
5'	2-8"
6'	3-8"

NO UTILITY STRUCTURES (ie. MANHOLES, CURB BOXES etc.) SHALL BE PLACED IN ANY DRIVEWAY OR SIDEWALK

INTERIOR DROP SANITARY MANHOLE

PRE-CAST CONCRETE MANHOLE

1. SECTIONS SHALL MEET ASTM C478.
2. ALL JOINTS MADE WATERTIGHT WITH RUBBER GASKET JOINTS
3. CONE TO BE ECCENTRIC TYPE
4. ALL MANHOLE COMPONENT PARTS SHALL HAVE THE NAME OF THE MANUFACTURER STENCILED ON THE INSIDE. THE LETTERING SHALL BE A MINIMUM OF 4" HIGH.
5. PROVIDE INTEGRAL BASE WITH PRECAST CONCRETE CHANNELS.
6. WHERE MANHOLES ARE CONSTRUCTED OVER EXISTING SEWERS, POURED IN PLACE OR PRECAST COOKIE AND DOGHOUSE STRUCTURES MAY BE USED IN PLACE OF INTEGRAL BASE.

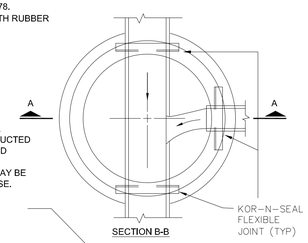

SECTION B-B

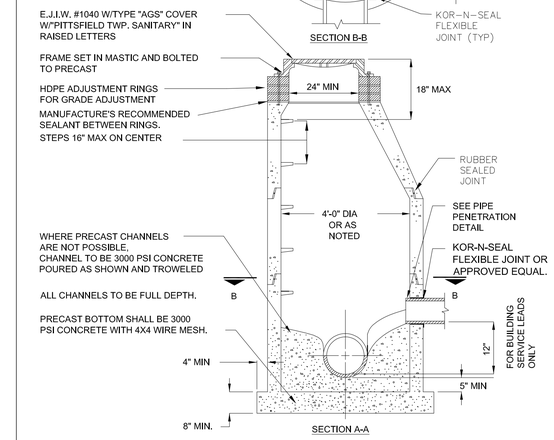

SECTION A-A

NO UTILITY STRUCTURES (ie. MANHOLES, CURB BOXES etc.) SHALL BE PLACED IN ANY DRIVEWAY OR SIDEWALK

SANITARY MANHOLE

NOTE:

FOR STORMWATER MANAGEMENT APPLICATIONS INCLUDING STORAGE AND INFILTRATION, ALTERNATE INFILLS, BASE MATERIAL, AND DRAINAGE MAY BE REQUIRED

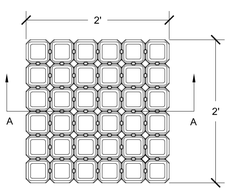

PLAN VIEW

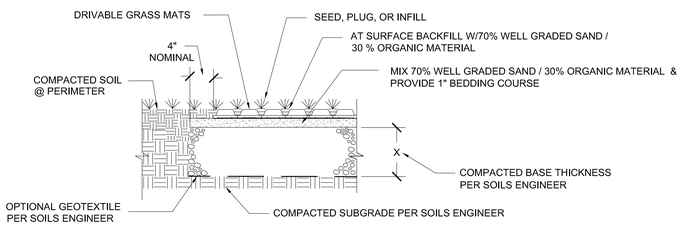

SECTION A-A

TYPICAL HEAVY TRAFFIC DRIVABLE GRASS DETAIL

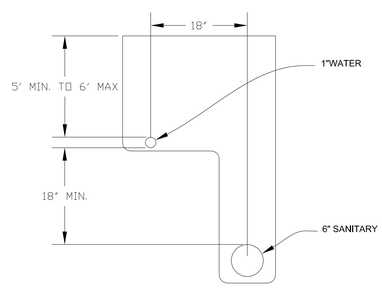

TYPICAL L TRENCH DETAIL
HOUSE LEADS

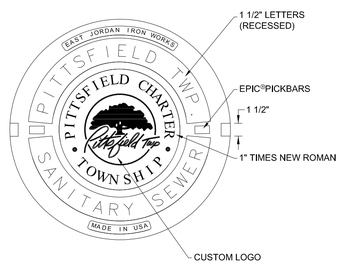

EAST JORDAN IRON WORKS 1040 Z BOLT DOWN FRAME
EAST JORDAN IRON WORKS 1040 AGS COVER

COVER DETAIL

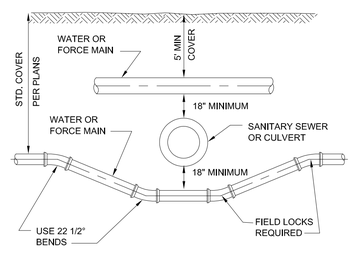

SEWER OR CULVERT CROSSING

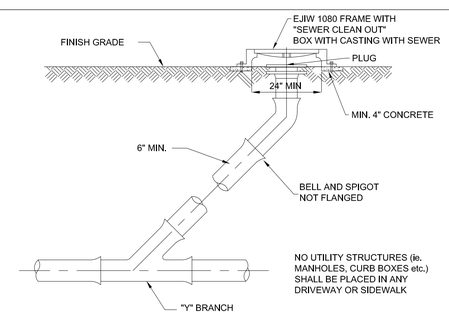

SANITARY SEWER CLEANOUT

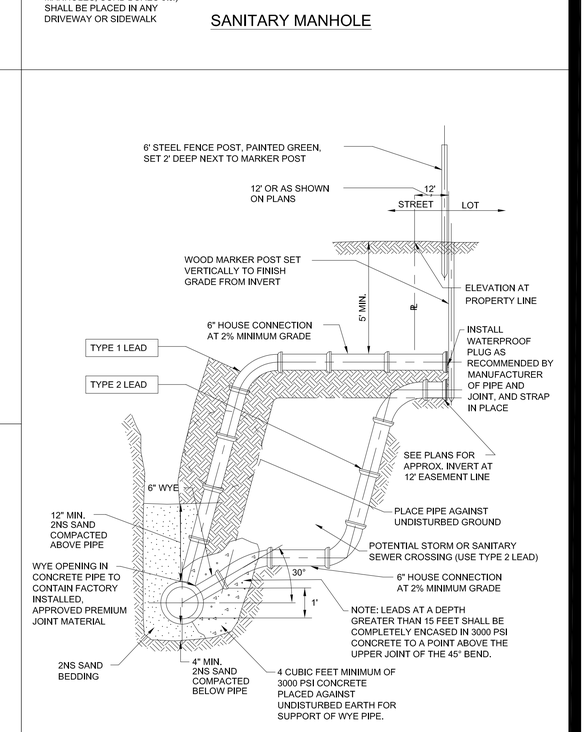

SANITARY SEWER SERVICE
& RISER CONNECTION DETAIL

Pittsfield Charter Township
6201 W. Michigan Ave.
Ann Arbor, MI 48108-9721
48108-9721
Tel. 734.822.3101
www.pittsfield-mi.gov

Revision	By	Appd.	YY.MM.DD
COVER DETAIL UPDATE	MRH	DRW	14.01.24
TWP REV	BWA	DRW	11.04.27
MANHOLE UPDATES	BWA	DRW	10.10.25
UPDATES	TTN	DRW	10.01.20

Issued	By	Appd.	YY.MM.DD
File Name: SS-01	BWA	DRW	07.10.01
	Dwn.	Chkd.	Dsgn. YY.MM.DD

Permit-Seal

Client/Project
PITTSFIELD TOWNSHIP

Pittsfield Township, Michigan

Title
SANITARY SEWER DETAILS

Project No.
2075001300

Scale
NOT TO SCALE

Revision

SANITARY SEWER AND MANHOLES

1.00 GENERAL

1.01 DESCRIPTION

A. The CONTRACTOR shall furnish all labor, tools, equipment and materials to construct all sanitary sewers, manholes and necessary appurtenant work as herein specified. No sewers shall be accepted until the sewer system has passed the system acceptance tests.

1.02 TESTING

A. General

1. The CONTRACTOR shall furnish all equip\-ment and personnel to conduct system acceptance tests as specified herein on all completed sewers. All tests shall be conducted under the supervision of the ENGINEER. No acceptance tests shall be conducted until the entire sewer system is constructed and has been installed for not less than 30 days.

2. The CONTRACTOR may desire to make an air test prior to backfill for his own purposes but the line acceptance tests shall be conducted after backfilling or extensions.

3. All sewer lines shall be televised while running enough water through the line to be visible at the next downstream manhole.

4. All sewer lines shall be checked for alignment.

5. All manholes shall be tested for leakage. All PVC lines shall be tested for deflection.

6. Sewer pipe 30 inches and smaller shall be air tested. Sewer pipe larger than 30 inches shall be tested by either infiltration or exfiltration and shall be tested in lengths of 1600 feet or less.

7. Should the results of any test fail to meet the criteria established in this Specification, the CONTRACTOR shall, at his own expense, locate and repair rejected section and retest until it is within specified allowance.

B. Test for Leakage - Air Test

1. Section 33-95 (pg 30-6) 2004-Ten State Standards.

2. After a manhole-to-manhole section of line has been backfilled and cleaned, it shall be plugged at each manhole with pneumatic plugs inflated to 35 psig internal pressure. The design of the pneumatic plugs shall be such that they will hold against the line test pressure without requiring external blocking or bracing.

3. There shall be three (3) hose connections to the pneumatic plug. One hose shall be used only for inflation of the pneumatic plug. The second hose shall be used for continuously reading the air pressure rise in the sealed line. The third hose shall be used only for introducing low pressure air into the sealed line.

4. There shall be a 0-30 psig gauge for reading the internal pressure of the line being tested. Calibrations from the 1-10 psig range shall be in tenths of lbs (not ounces) and this 0-10 portion shall cover 90% of the complete dial range.

5. Low pressure air shall be introduced into the sealed line until the internal air pressure reaches 4.0 psig greater than the average back pressure of any ground water pressure that may be over the pipe. At least two (2) minutes shall be allowed for the air pressure to stabilize. After the stabilization period, the third hose shall be disconnected.

6. The portion of line being tested shall be accepted if the portion under test meets the following conditions.

a. DI, and RCP Pipes

(1) The time requirement for the pressure to decrease from 3.5 to 2.5 psig (greater than the average back pressure of any ground water that may be over the pipe) shall not be less than the time given in the following table:

Pipe	Min. Holding Time Seconds/100 ft. Pipe
4-inch	18
6-inch	42
8-inch	72
10-inch	90
12-inch	108
15-inch	126
18-inch	144
21-inch	180
24-inch	216
27-inch	252
30-inch	288

(2) In areas where ground water is known to exist, the CONTRACTOR shall install a 1/2-inch diameter capped pipe nipple, approximately 10 inches long, through the manhole wall on top of one of the sewer lines entering the manhole. This shall be done at the time the sewer line is installed. Immediately prior to the performance of the line acceptance test, the ground water level shall be determined by removing the pipe cap, blowing air through the pipe nipple into the ground so as to clear it, and then connecting a clear plastic tube to the pipe nipple. The hose shall be held vertically and a measurement of the height in feet of water shall be taken after the water stops rising in this plastic tube. The height in feet shall be divided by 2.3 to establish the lbs of pressure that will be added to all readings. For example, if the height of water is 11-1/2 ft, then the added pressure will be 5 psig. This makes the 3.5 psig to be 8.5 psig, and the 2.5 psig to be 7.5 psig. The 1 lb allowable drop and the timing remains the same.

a. PVC Pipe

(1) The time requirement for the pressure to decrease from 3.5 to 3.O psig (greater than the average back pressure of any ground water that may be over the pipe) shall not be less than that shown in the following table:

Pipe Size (inches)	Holding Time (seconds)	Minimum Holding Time (seconds)
4-inch	0.190xL	113
6-inch	0.427xL	170
8-inch	0.760xL	227
10-inch	1.187xL	283
12-inch	1.709xL	340
15-inch	2.671xL	425
18-inch	3.846xL	512

(2) If any section of the sewer fails to meet this requirement, the CONTRACTOR shall perform a television inspection of the faulty section and repair or replace at his own expense all defective materials and/or workmanship to the satisfaction of the ENGINEER. The test procedure shall be repeated until the results are acceptable.

C. Test for Infiltration

1. Sewer pipe over 18 inches shall be tested to measure the infiltration of ground water. If the measured leakage exceeds 100 gallons per inch diameter per mile of pipe per 24 hr period, the CONTRACTOR shall locate the points of excessive leakage and make the necessary repairs at his own expense.

2. In the event the line does not pass the infiltration test as stated above, the test shall be repeated after suitable repairs have been completed.

D. Test for Exfiltration

1. Where the ground water provides less than a 2 ft head on the sewer, an exfiltration test shall be conducted by filling the sewer with water to a 4 ft head or 4 ft above the ground water level, whichever is greater. The allowable water loss shall be 100 gal/in./mi/day as calculated above for infiltration.

2. After the sewer has been filled with water, 4 hrs time shall be allowed for water absorption by the pipe before exfiltration tests are initiated.

3. For the purpose of establishing the 4 ft test head, the head shall be measured from the center of the sewer pipe at the midpoint of the test section length. This procedure shall be used for both infiltration and exfiltration tests.

E. Test for Manhole Leakage

1. All manholes shall be tested for leakage by using plugs on inleting-outleting sewers, and filling the manholes with water to the top of the man\-hole. Four hours shall be allowed for water absorption by the manhole before testing is initiated. Allowable exfiltration for 48-inch diameter manholes shall be 2 gallons per foot of depth per day.

F. Test for Alignment

1. All sewers shall be laid accurately to the line and grade designed by the ENGINEER. The sewers will be tested for alignment by shining a light through the pipe at a manhole and viewing the light from an adjacent manhole. Any section of sewer in which a light cannot be seen from one manhole to the next shall be corrected to the satisfaction of the ENGINEER to pass this test.

G. Test for Deflection of PVC Pipe

1. PVC pipe sewers shall be installed in such a manner that the initial deflection of the conduit shall conform to the latest revision of ASTM D-3034.

2. Deflection of PVC pipe shall be tested by pulling a rigid pig or equivalent through the pipe. The pig shall be constructed in accordance with the following table of maximum outside diameters and shall be submitted to the ENGINEER for review before testing is initiated.

Pipe I.D.	Pig O.D.
6 inches	5.33 inches
8 inches	7.11 inches
10 inches	8.87 inches
12 inches	10.55 inches
15 inches	12.90 inches
18 inches	15.74 inches

3. The pig shall be drawn by hand through the pipe from manhole to manhole. Any portion of pipe through which the pig passes freely shall be deemed to have passed the deflection test. Sections of pipe through which the pig does not pass shall be located, un\-covered and the pipe zone bedding improved and backfilled by the CONTRACTOR at his own expense. The pipe shall then be retested before acceptance is granted.

H. Material Tests

1. The CONTRACTOR shall have tests of pipe and strength made by an independent testing laboratory. Tests of up to 4 lengths of sewer pipe per hundred lengths may be required to show compliance with the Specifications. All pipe delivered to the job site shall be accompanied with a manufacturer's certificate of compliance to the Specifications.

1.03 SUBMITTALS

A. The CONTRACTOR shall submit shop drawings or data sheets for all pipe, manholes, manhole castings, pipe to manhole connections, and valves. The Contractor shall submit certification letter for all pipe proposed on the project. The letters shall contain the following: Contractor name, project name, township name, current date, certification of pipe provided and letterhead of the certifying company.

2.00 PRODUCTS

2.01 SEWER PIPE

A. Pipe for sewer 24-inch diameter and smaller shall be polyvinyl chloride (PVC). Pipe for 30-inch diameter and larger shall be PVC truss pipe. Ductile iron pipe and reinforced concrete pipe shall be used as specified by the ENGINEER.

B. Pipe for service leads 4 though 8 inches in diameter shall be polyvinyl chloride (PVC).

C. Reinforced concrete pipe shall be no less than the latest revision of ASTM C76, with the class designation as shown on the Plans or in the Pro\-posal.

D. PVC pipe 4 inches through 15 inches in diameter shall meet or exceed all of the requirements of the current ASTM D-3034 SDR-26 polyvinyl chloride sewer pipe and fittings. 18-inch diameter PVC pipe shall meet or exceed all the requirements of the current ASTM F-794 SDR 26 polyvinyl chloride sewer pipe and fittings. Samples of pipe and physical and chemical data sheets shall be submitted to the ENGINEER for review. Approval shall be obtained before pipe is purchased.

E. If the sewer pipe is greater than 15 feet deep PVC pipe shall be SDR 21.

F. Truss pipe shall meet or exceed all of the requirements of the current ASTM D2680.

G. Ductile iron pipe shall meet or exceed all the requirements of ANSI A21.50 with a cement lining.

2.02 SEWER PIPE FITTINGS

A. Fittings shall be of the same material as the pipe, and in no case shall the walls be thinner than that of the pipe furnished.

B. Wye and tee fittings for PVC pipe shall be reviewed by the ENGINEER before purchasing.

C. The dry fit of all fittings must be snug. If the fit is such that it is loose, the pipe or fitting will be rejected as faulty and of improper size.

2.03 SEWER PIPE JOINTS

A. Concrete pipe joints shall be made of a resilient material conforming to the latest revision of ASTM Designation C443. Proper lubricant shall be furnished by the joint manufacturer.

B. Concrete pipe for use with rubber joints shall be smooth and precisely formed to provide a uniform annular space for joint materials.

C. PVC pipe shall be jointed with ring gusseted bell ends. (ASTM-D3212) Jointing materials shall be applied to the bell end of the pipe at the point of manufacture in such a manner that a tight uniform joint will be achieved and such that when the joint is made up in the field, the joint material will not roll or tear from the pipe. A proper joint lubricant shall be furnished by the pipe manufacturer.

2.04 REINFORCED CONCRETE MANHOLES

A. Manholes shall conform to the current ASTM specifications for precast reinforced concrete manhole sections, serial designation C478. Manhole section joints shall conform to ASTM C990-96. Cone sections shall be straight side type, with an offset step configuration.

B. All manhole component parts shall have the name of the manufacturer stenciled on the inside. The lettering or logo shall be a minimum of 4-inches high.

C. Manholes constructed over an existing sewer line shall have a doghouse mudded to an 8-inch thick cookie. The bottom of the existing pipe shall be the channel. All other manholes shall have precast integral base sections with pre-formed concrete channels.

D. All channels shall be constructed to the full flow depth of the pipe.

2.05 MORTAR FOR MANHOLES

A. Mortar for plastering manholes shall be made of one part Portland cement and two parts fine aggregate.

2.06 MANHOLE FRAMES AND COVERS

A. Manhole frames and covers shall weigh not less than 350 lbs. Each frame and cover shall have machined bearing surfaces and shall be suitably notched for convenient removal of the cover. Each cover shall be marked with the Pittsfield Township logo and the letters, PITTSFIELD TWP SANITARY SEWER integrally cast into the cover.

B. Covers shall be of the "self-sealing" design having a continuous gasket glued in a machined groove and a concealed pickhole. Frames and covers shall be East Jordan 1040Z, with Type AGS cover.

C. All manhole frames and covers shall be coated by the manufacturer with coal tar pitch varnish or other asphaltum coating reviewed by the ENGINEER.

2.07 MANHOLE STEPS

A. Steps shall be plastic coated steel. They shall be M.A. Industries PS1-PF or PS1-B, or approved equal.

2.08 MANHOLE CONNECTIONS

A. Sewer pipe (6-inch to 24-inch) to manhole connections shall be through: 1) a flexible rubber boot which shall be securely clamped into a core-drilled pipe port. Pipe ports shall be core-drilled at the point of manhole manufacturer and shall be accurately located within 1/2-inch of proposed sewer centerline (Kor-N-Seal); or, 2) a self-adjusting mechanical pipe to manhole seal which provides a resilient flexible and infiltration-proof joint (Res-seal); or, 3) a flexible rubber wedge firmly rammed into a rubber gasket which is cast into the manhole (Press Wedge II), or equal. All flexible pipe to manhole connections shall be installed per the manufacturers specifications.

B. Neoprene rubber for the manhole boot shall meet ASTM Specification C443 and shall have a minimum thickness of 3/8-inch. Pipe clamp bands shall be of corrosion-resistant steel.

C. Sewer pipe over 24 inches to manhole connections shall be in accordance with details shown on the Plan.

2.09 SANITARY MANHOLE ADJUSTMENTS

A. All final grade adjustment of manhole covers and frame assemblies shall be completed utilizing injection molded High Density Polyethylene (HDPE) adjustment rings as manufactured by LADTECH, INC. or approved equal. The adjustment rings shall be manufactured from polyethylene plastic as identified in ASTM Designation D 1248.

B. All adjustment for matching road grade shall be made utilizing a molded indexed slope ring.

C. Each adjustment ring shall be sealed with a 3/16 to ¼ inch bead of butyl rubber sealant per the manufacturer's instructions. Sealant shall meet ASTM specification C-990.

D. All castings and adjustment rings shall be securely fastened to the cone of the structure with four 3/8-inch threaded rods. The rods shall be galvanized or stainless steel anchored to the structure with Redhead concrete anchors or equal. Stainless steel or galvanized nuts and washers shall be used to attach the casting.

2.10 MANHOLE DROPS

A. Manhole drop connections shall be interior drops using the drop bowl as produced by Reliner-Duran Inc. or approved equal.

B. Drop bowl model A-4" shall be used for all lines up through full 6-inch inlets. Drop bowl model A-6" shall be used for all 8-inch inlets. Drop bowl model B-8" shall be used for all 10-inch inlets. Lines larger than 10 inches shall be as directed by the ENGINEER.

C. The force line hood shall be attached on models A-4" and A-6" when the incoming line is from a force main or the slope is 3 percent or greater.

D. The drop pipe shall be secured to the manhole wall with Reliner-Duran, Inc. stainless steel adjustable clamping brackets or approved equal.

E. The drop bowl and each clamping bracket shall be attached to the manhole wall with 3/8-inch x 3 3/4-inch bolts.

F. The incoming pipe shall be trimmed such that it protrudes 2 inches into the manhole .

G. A 1-inch V shaped notch shall be cut into the bottom edge of the incoming pipe.

3.00 EXECUTION

3.01 EXCAVATION AND BACKFILL

A. All excavation and backfill above a line 12 inches above the crown of the pipe shall conform to Section 2.04, Earthwork, of these Specifications.

3.02 BEDDING

A. Reference Section 33.83a of 10 State Standards.

B. Reference Section 33.83b of 10 State Standards.

C. Ductile iron, and concrete pipes shall be laid on a compacted granular material placed on the bottom of the trench to a depth of not less than 3 inches for 24-inch and smaller pipe and not less than 4 inches for pipe larger than 24-inch conforming to Class B bedding as shown on the Plans. Where shown on the Plans or required by the ENGINEER, concrete encasement or concrete cradle shall be used.

D. PVC pipe shall be laid on a compacted granular material placed on the bottom of the trench to a depth of not less than 4 inches conforming to Class B bedding as shown on the Plans. Where shown on the Plans, or where the pipe passes under a road with less than 4 ft of cover, the pipes shall be encased.

E. For all pipes, compacted granular material shall be placed at the sides of the pipe and cover not less than 12 inches above the crown of the pipe.

F. "Granular Material" shall be class 2NS sand, pea gravel or crushed stone conforming to ASTM C33 Size No. 67 placed in not more than 6-inch layers and com\-pacted to not less than 95% standard density for PVC and 90% standard density for reinforced concrete.

G. Pea gravel or crushed stone used for bedding shall be separated from the sand backfill with a non-woven geotextile fabric. The fabric shall be Amoco 4551, or approved equal.

3.03 PIPE INSTALLATION

A. Installation of PVC pipe shall be in confor\-mance with ASTM D2321-89.

B. All pipe shall be laid true to the required lines and grades. All trenches when pipe laying is in progress shall be kept dry; and all pipes and fittings shall be uniformly supported on a properly trimmed bedding with holes at each joint to receive bells. All pipe shall be laid with bells uphill.

C. All joints shall be made up in accordance with the manufacturer's instructions using materials and equipment especially prepared for the type of joint to be used.

D. The grade as shown on the profiles is that of the pipe invert and that to which the work must conform. The grade shall be kept by levels, laser or other tools which shall be furnished by the CONTRACTOR at his expense. Each pipe shall be laid accurately to the line and grade as shown on the Plans and in such manner as to form a close concentric joint with the adjoining pipe and prevent sudden offsets of the invert. The interior of sewers shall, as the work progresses, be cleaned of all dirt, cement, debris and other superfluous materials of every description. Bulkheads shall be used to keep foreign materials out of the open end of the sewer when work is not in progress.

E. The location of the piping as shown on the Plans has been determined to avoid, insofar as possible, interference with trees or structures or fixtures above ground and other underground mains, services, utilities, or structures. Any change in location or alignment of piping which may be found more feasible or practicable as the work progresses shall be made by the CONTRACTOR, as the ENGINEER may direct.

F. All pipe and fittings shall be carefully lowered and moved into position in trench or vault in a controlled manner such as will prevent damage to the pipe and any coatings or lining. An excessive amount of scratching on the surface of the PVC pipe will be considered cause for rejection.

G. The trench shall be backfilled closely behind the pipe laying. Unless otherwise directed or permitted by the ENGINEER, the backfilling shall follow and be completed to the top of the trench within two pipe lengths behind pipe laying.

H. All cutting of the pipe shall be done in a neat workmanlike manner with the least amount of waste and without damage to existing or new lines. A fine tooth saw, tubing cutter or similar tool may be used to cut PVC pipe. Cuts must be square. Ragged edges shall be removed with a cutting tool or file.

I. After cutting bell and spigot or socket pipe, a stop mark shall be made with a pencil or crayon using dimensions as shown by the manufacturer's instructions or by using another pipe in the field as a guide.

J. Breaks in pipe or joints shall be repaired to the satisfaction of the ENGINEER and at the expense of the CONTRACTOR.

3.04 CONNECTIONS TO EXISTING MANHOLES AND OTHER RIGID STRUCTURES

A. When a sewer is connected to an existing manhole, a hole adequate to receive the new pipe shall be cut into the manhole.

B. If the existing manhole is of brick construction, a single rowlock of brick shall be turned over the new pipe and the existing manhole brick work shall be cleaned, pointed and given a 1/2-inch mortar coat on the outside surface.

C. For connections to existing precast reinforced concrete manholes, a hole shall be cored into the concrete manhole wall to receive the pipe. A Kor-N-Seal boot or engineer approved equal shall be clamped into the cored hole and used to make the connection.

D. For connections to existing fiberglass manholes, a hole shall be cored into the manhole wall to receive the pipe. A Kor-N-Seal boot or engineer approved equal shall be installed using fiberglass reinforced pipe stubout for Kor-N-Seal boot sealing surface.

3.05 STREAM AND RIVER CROSSING

A. Whenever a pipe is required to cross a stream or river, all work shall be in accordance with the provisions of Act 346, the Inland Lakes and Streams Act of 1962, and the rules and regulations promulgated thereunder. Stream crossings and all restoration required shall be completed within five days of the construction.

B. The CONTRACTOR shall utilize such con\-struction methods as are feasible and practicable to divert or stop stream flow to lay the pipe in the dry. Pipe shall be ductile iron, mechanical joint, or compression gasket joint pipe with joints at transition to other types of sewer pipe encased with no less than 1 cu yd of concrete, placed at a minimum of 6 inches thickness around the pipe. After the sewer is properly laid, jointed and encased, the stream-channel shall be cleaned of dirt and debris resulting from the CONTRACTOR's operations.

C. After the crossing is made, heavy riprap and sodding shall be placed to protect the banks from corrosion as shown on the Plans.

PCT July 2008

Pittsfield Charter Township
6201 W. Michigan Ave.
Ann Arbor, MI 48108-9721
48108-9721
Tel. 734.822.3101
www.pittsfield-mi.gov

Revision	By	Appd.	YY.MM.DD
TWP REV	BWA	DRW	11.04.27
UPDATES	BWA	DRW	10.10.25
UPDATES	TTN	DRW	10.01.20

Issued	By	Appd.	YY.MM.DD
File Name: SS-02	BWA	DRW	DRW	07.10.01
	Dwn.	Chkd.	Dsgn.	YY.MM.DD

Permit-Seal

Client/Project
PITTSFIELD TOWNSHIP

Pittsfield Township, Michigan

Title
SANITARY SEWER SPECIFICATIONS

Project No.
2075001300

Scale
NOT TO SCALE

Revision
1

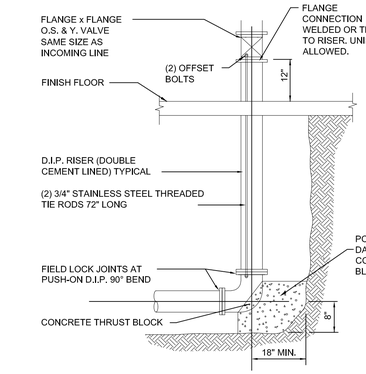

FIRE PROTECTION RISER DETAIL

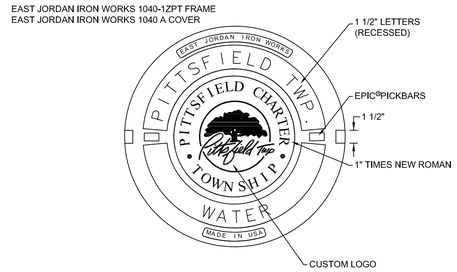

COVER DETAIL

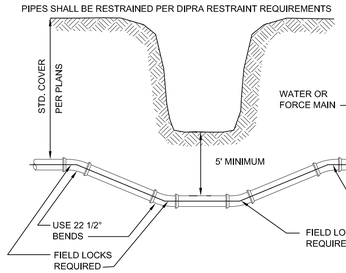

DITCH & STREAM CROSSING

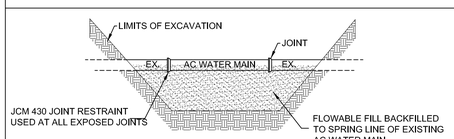

ASBESTOS CEMENT (AC) WATER MAIN

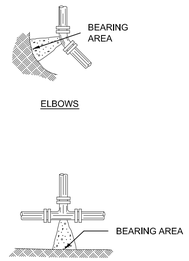

ELBOWS					
PIPE DIA. INCHES		BEARING AREA SQUARE FEET			
		90°	45°	22 1/2°	11 1/4°
4		2.1	1.1	0.6	0.3
6		4.1	2.2	1.1	0.6
8		6.8	3.7	1.9	0.9
10		10.1	5.5	2.8	1.4
12		14.1	7.6	3.9	2.0
16		24.2	13.0	6.7	3.3
18		30.0	16.3	8.3	4.2
20		36.8	19.9	10.1	5.1

TEES, CROSSES & HYDRANTS		
PIPE DIA. INCHES		BEARING AREA SQUARE FEET
4		1.5
6		2.9
8		4.8
10		7.1
12		10.0
16		17.1
18		21.0
20		26.0

NOTES:
1. CONCRETE FOR ALL THRUST BLOCKS SHALL BE 3000 PSI, 28 DAY STRENGTH MIN.
2. ALL THRUST BLOCKS SHALL BE POURED AGAINST UNDISTURBED EARTH
3. BOLTS, FITTINGS & JOINTS SHALL BE KEPT CLEAR OF CONCRETE
4. A BEARING CAPACITY OF 2000# PER FOOT WAS USED IN DETERMINING THE MINIMUM "BEARING AREAS" IN THE ABOVE TABLE
5. THE CROSS SECTION OF THE THRUST BLOCKS SHALL BE SQUARE
6. IN ADDITION TO THRUST BLOCKS, ALL PIPE JOINTS SHALL BE RESTRAINED WITH LOCKING GASKETS PER DIPRA'S STANDARDS.

SOIL CHARACTERISTICS	FACTOR
(A) LOOSE COARSE OR MEDIUM SAND; COMPACT FINE SAND; COMPACT SAND-CLAY SOILS; STIFF CLAY	0.33
(B) FIRM FINE SAND; COMPACT INORGANIC SILT; FIRM SAND-CLAY SOILS; MEDIUM CLAY	0.50
(C) LOOSE FINE SAND; FIRM INORGANIC SILT	0.67
(D) LOOSE SAND-CLAY SOILS; LOOSE INORGANIC SILT SOFT CLAY	1.00

"BEARING AREA" x FACTOR = ACTUAL BEARING AREA
2.1 x .5 = 1.05 SQ. FT.
BASED UPON 150# TEST PRESSURE

THRUST BLOCK

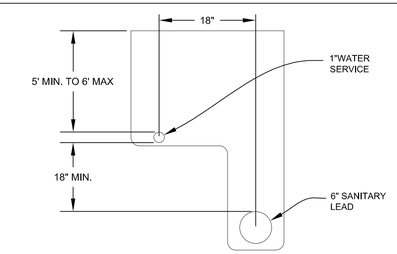

TYPICAL L TRENCH DETAIL HOUSE LEADS

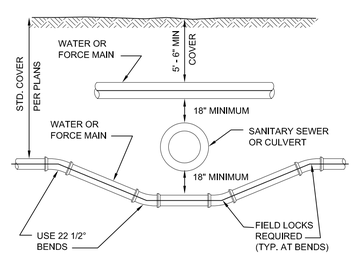

SEWER OR CULVERT CROSSING

PRE-CAST CONCRETE MANHOLE
1. SECTIONS SHALL MEET ASTM C478.
2. ALL JOINTS MADE WATERTIGHT WITH RUBBER GASKET JOINTS
3. CONE TO BE OFFSET STEP ECCENTRIC TYPE
4. ALL MANHOLE COMPONENT PARTS SHALL HAVE THE NAME OF THE MANUFACTURER STENCILED ON THE INSIDE. THE LETTERING SHALL BE A MINIMUM OF 4" HIGH.

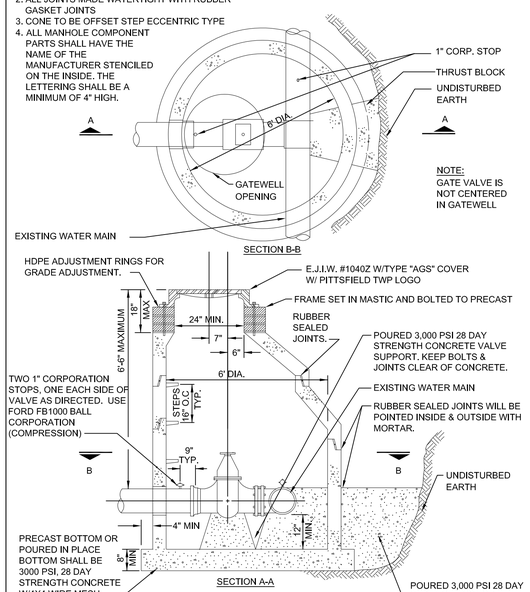

TAPPING SLEEVE & VALVE & WELL

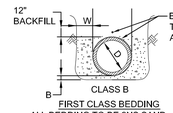

BLUE, 12 GAUGE SINGLE STRAND TRACER WIRE ATTACHED TO WATER MAIN PIPE MUST BE WRAPPED WITH POLLY WRAP AND SECURELY TAPED AT ENDS.

PIPE	D	W	B
PVC	0"-12"	12" MIN. 18" MAX.	4"
A-C,V.C.P.	0"-12"	6" MIN. 12" MAX.	4"
DIP	0"-24"	6" MIN. 12" MAX.	4"
A-C,CONC.	0"-24"	6" MIN. 12" MAX.	4"
CONC. DIP	24" +	6" MIN. 12" MAX.	4"

NOTES:
1. MINIMUM TRENCH WIDTH (SEE TABLE).
2. RECESS TRENCH TO RELIEVE THE BELL OF ALL LOAD. PIPE HAUNCHES SHALL BE COMPACTED.
3. 2NS BACKFILL TO DEPTH OF ONE FOOT ABOVE PIPE. TAMPED LAYERS NOT TO EXCEED 6" IN DEPTH. PLATE COMPACT ABOVE PIPE (ON 1st LIFT)
4. ALL PIPE TO BE PLACED AND JOINTED IN A DRY TRENCH AND LAID ACCURATELY TO LINE AND GRADE WITH BELLS UPHILL.
5. ALL CONCRETE ENCASEMENT AND CRADLING TO BE CLASS "A" CONCRETE.

BEDDING

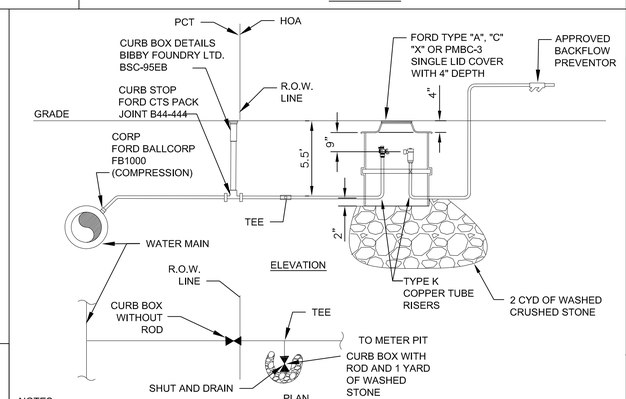

NOTES:
1. SADDLE MAY BE REQUIRED ON MAIN BASED ON LEAD SIZE, MAIN SIZE, AND MAIN PRESSURE
2. ALL WATER MAIN TAPS AND COMPONENT PARTS SHALL BE APPROVED BY THE PITTSFIELD TOWNSHIP UTILITIES DEPARTMENT PRIOR TO INSTALLATION.
3. INSTALLATION SHALL BE INSPECTED AND APPROVED BY THE PITTSFIELD TOWNSHIP UTILITIES DEPARTMENT.

IRRIGATION METER PIT DETAIL

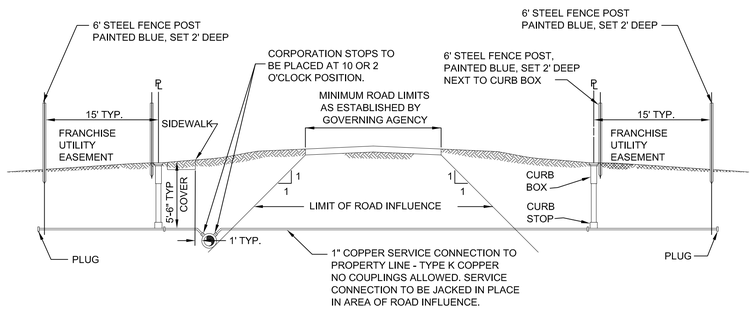

WATER MAIN CONNECTION

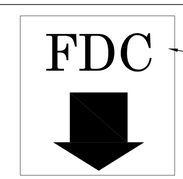

RED "REFLECTIVE" LETTERS WITH WHITE "REFLECTIVE" BACKGROUND. LETTERS WILL BE A MINIMUM OF 8" TALL BY 4" WIDE WITH 2" GIRTH, WITH AN 8" TALL 4" WIDE RED ARROW UNDER LETTERS POINTING DIRECTLY AT THE CONNECTION. TALLER BUILDINGS MAY REQUIRE LARGER LETTERING. SIGN SIZE AND LOCATION DETERMINED BY FIRE MARSHALL

FIRE DEPARTMENT CONNECTION LABEL DETAIL

PRE-CAST CONCRETE MANHOLE
1. SECTIONS SHALL MEET ASTM C478.
2. ALL JOINTS MADE WATERTIGHT WITH RUBBER GASKET JOINTS
3. CONE TO BE OFFSET STEP ECCENTRIC TYPE
4. ALL MANHOLE COMPONENT PARTS SHALL HAVE THE NAME OF THE MANUFACTURER STENCILED ON THE INSIDE. THE LETTERING SHALL BE A MINIMUM OF 4" HIGH.
5. PROVIDE INTEGRAL BASE.
6. KOR-N-SEAL BOOTS OR APPROVED EQUAL TO BE INSTALLED AT PIPE PENETRATIONS.
7. WHERE GATE WELLS ARE CONSTRUCTED OVER EXISTING WATERMAIN, POURED IN PLACE OR PRECAST COOKIE AND DOGHOUSE STRUCTURES MY BE USED IN PLACE OF INTEGRAL BASE.

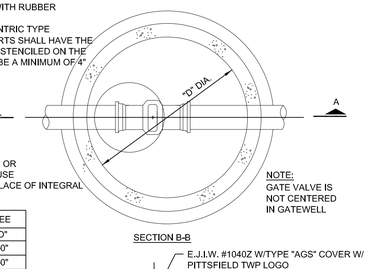

STRAIGHT THRU		TEE
VALVE SIZE	"D"	"D"
8"	5'-0"	6'-0"
12"	5'-0"	6'-0"
16"	6'-0"	6'-0"

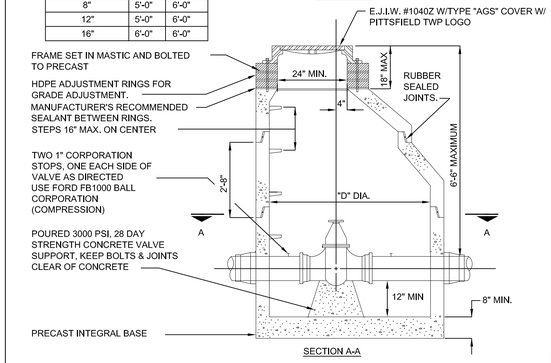

STANDARD GATE VALVE & WELL

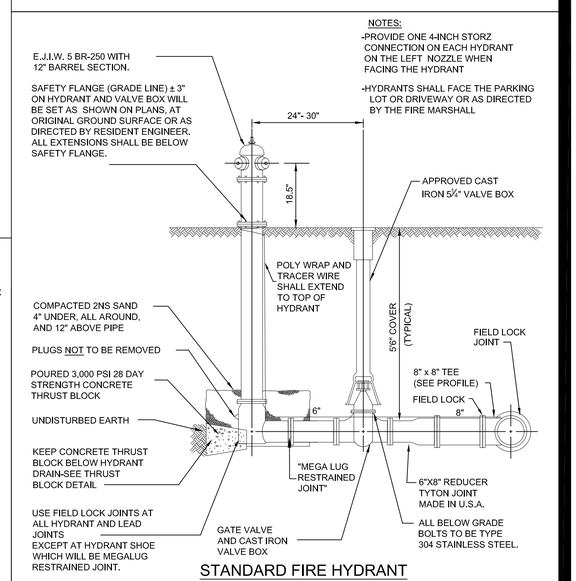

NOTES:
-PROVIDE ONE 4-INCH STORZ CONNECTION ON EACH HYDRANT ON THE LEFT NOZZLE WHEN FACING THE HYDRANT
-HYDRANTS SHALL FACE THE PARKING LOT OR DRIVEWAY OR AS DIRECTED BY THE FIRE MARSHALL

STANDARD FIRE HYDRANT

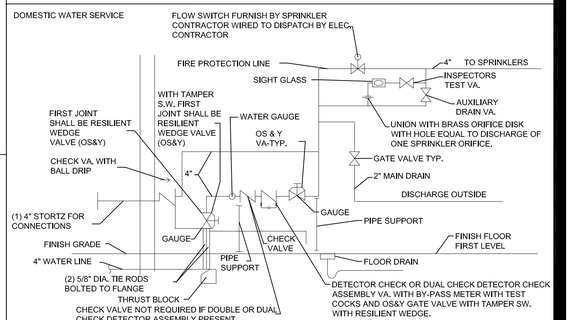

METER ROOM DETAIL

Pittsfield Charter Township
6201 W. Michigan Ave.
Ann Arbor, MI 48108-9721
48108-9721
Tel. 734.822.3101
www.pittsfield-mi.gov

Revision	By	Appd.	YY.MM.DD
UPDATES	MRH	DRW	14.01.24
FDC UPDATE	BWA	DRW	11.09.13
TWP REV	BWA	DRW	11.04.27
HYDRANT, MANHOLE UPDATE	BWA	DRW	10.10.25
UPDATES	TTN	DRW	10.01.20

Issued	By	Appd.	YY.MM.DD
File Name: W-01	BWA	DRW	07.10.01
Permit-Seal	Dwn.	Chkd.	Dsgn. YY.MM.DD

Client/Project
PITTSFIELD TOWNSHIP

Pittsfield Township, Michigan

Title
WATER MAIN DETAILS

Project No. 2075001300

Scale NOT TO SCALE

Revision

1.00 GENERAL

1.01 DESCRIPTION

A. The CONTRACTOR shall furnish all labor, materials, and equipment required to construct a water main and necessary appurtenant work as herein specified. The water main shall be installed in the locations as shown on the Plans and shall meet all acceptance tests.

1.02 NOTIFICATION

A. CONTRACTOR shall notify the ENGINEER and the Pittsfield Township Utilities Department at (734) 882-2110, 24 hours prior to flushing or chlorination of the water main.

B. CONTRACTOR shall schedule bacteriological testing with the ENGINEER 48 hours prior.

C. CONTRACTOR shall notify the ENGINEER and the Pittsfield Township Utilities Department 48 hours prior to connecting to an existing water main.

1.03 SUBMITTALS

A. The CONTRACTOR shall submit shop drawings or data sheets for all pipe, manholes, manhole castings, pipe to manhole connections, valves, hydrants and the B-1 Poly Pig. The Contractor shall submit a certification letter for all pipe proposed on the project. The letters shall contain the following: Contractor name, project name, Township name, current date, certification of pipe provided and letterhead of the certifying company.

1.04 TESTING

A. General

1. CONTRACTOR shall furnish all equipment and personnel to conduct system acceptance tests as specified herein. All tests shall be conducted under the supervision of the ENGINEER. All water mains, branches and valves shall be subject to cleaning with a poly-pig, hydrostatic pressure testing, disinfection and bacteriological testing. No acceptance tests shall be conducted until the water main has been installed and backfilled for not less than 30 days. A copy of all test results shall be furnished to the ENGINEER.

2. Hydrostatic pressure testing must be performed in accordance with ANSI/AWWA C600. Disinfection and bacteriological testing must be performed in accordance with ANSI/AWWA C651.

3. CONTRACTOR shall furnish all material and labor to provide for an acceptable full size blow-off to flush the poly-pigs out of the main at the far end of the project not connected to the existing system.

4. Should the results of any test fail to meet the criteria established in this Specification, the CONTRACTOR shall, at his own expense, locate and repair the rejected section and retest until it is within the specified allowance.

5. Only Pittsfield Township personnel or the CONTRACTOR under direct supervision of Pittsfield Township personnel may fill or flush lines.

B. Preparation

1. After the pipe has been laid and backfilled as specified, the CONTRACTOR shall fill the line, or a valve section thereof, to be tested with water in such a manner as to expel all air from the pipe. This may be done through fire hydrants at the high points; or, if no hydrant is available at such point, the CONTRACTOR shall make the taps necessary to accomplish the expulsion of all air. At the close of the test, all taps shall be satisfactorily plugged with brass plugs.

C. Sequence

1. All water mains connected to an existing water system shall be flushed, swabbed, chlorinated and bacteriological tested prior to pressure testing. The sequence for acceptance testing shall be:

   a. Flushing with approved B-1 Poly-Pig
   b. Chlorination
   c. Flushing
   d. Bacteriological Testing
   e. Pressure Testing

2. Where mains can be totally isolated from the existing water system with airgaps, pressure testing shall precede chlorination and bacteriological testing. The sequence for acceptance testing shall be:

   a. Pressure Testing
   b. Connect to System
   c. Flushing with approved B-1 Poly Pig
   d. Chlorination
   e. Flushing
   f. Bacteriological Testing

3. If a hydrostatic pressure test fails, the chlorination and flushing process must be repeated after repairs to the system are completed.

D. Flushing

1. All flushing will be conducted by the TOWNSHIP with clean potable water until the water runs clear.

E. Chlorination

1. All new mains and pipe or any existing mains contaminated by the CONTRACTOR shall be chlorinated to a minimum residual chlorine concentration of fifty (50) parts per million with commercial liquid chlorine solution or approved equal. The chlorinated water shall be allowed to stand in the mains for 24 hours. The end of the 24-hour period the chlorinated water at all parts of the mains shall show a free available chlorine residual of not less than twenty-five (25) parts per million. If less than twenty-five (25) parts per million residual is shown at the end of the first 24 hours period, additional chlorine shall be added until a residual of not less than twenty-five (25) parts per million at all parts of the system is shown after a subsequent 24 hour period. The chlorinated water shall then be removed from the mains and the mains flushed with potable water for bacteriological testing. No flushing shall take place between the two required bacteriological testing.

F. Bacteriological Testing

1. The Pittsfield Township Utilities Department will take bacteriological samples of the water in the mains for analysis at two different times. The first samples will be taken 24 hours after the mains have been satisfactorily chlorinated, flushed and filled with potable water. The second sample will be taken 24 hours later. Each sample will be incubated for 48 hours. No flushing shall be done during or between tests, unless supervised and approved by ENGINEER. Two sets of safe consecutive bacteriological samples, collected at least 24 hours apart, must be obtained before placing the water main in service.

2. The CONTRACTOR shall provide a sufficient number of corporation cocks and copper tubing for taking samples. Samples shall not be collected from hoses or fire hydrants.

3. Bacteriological testing must begin on Mondays to allow Pittsfield Township personnel and the testing laboratory a full work week to conduct the testing.

G. Hydrostatic Pressure Testing

1. The CONTRACTOR shall pressure test sections of water main as sections of 2,000 feet or less unless otherwise authorized by the ENGINEER. When permitted to test lengths in excess of 2,000 feet, only the allowable leakage for 2,000 feet will be permitted.

2. All water mains shall be subjected to a hydrostatic pressure of 150 psi based on the elevation of the lowest point in the system. The main shall be maintained under the test pressure for a minimum continuous period of two (2) hours by pumping potable water into the line at frequent intervals. The volume of water so added shall be measured and considered to represent the leakage from the main. No pipeline installed will be accepted until the leakage measured is less than 0.092 gallons per inch diameter of the pipe per 1 hour per 1,000 feet.

3. In the event that the leakage exceeds the specified amount, the main shall be carefully inspected for leaks and repaired as necessary. Any cracked or defective pipe, fittings, valves or hydrants discovered shall be removed and replaced with sound material and the test repeated to the satisfaction of the ENGINEER.

4. If the CONTRACTOR chooses to pressure test against an existing valve he assumes the responsibility of meeting the leakage requirements. The CONTRACTOR may at his discretion provide a physical break and cutting in sleeve for pressure testing.

5. Temporary connections (jumpers) between existing water mains and the newly constructed system for testing purposes, shall include a reduced zone backflow preventer to prevent backflow and possible contamination of the public water.

H. Material Tests

1. The CONTRACTOR shall have test of pipe and strength made by an independent testing laboratory. Tests of up to 4 lengths of water main per hundred lengths may be required to show compliance with the Specifications. All pipe delivered to the job site shall be accompanied with a manufacturers certificate of compliance to the specifications.

2.00 PRODUCTS

A. All products shall be consistent with the current component part submittal sheet posted on the Township website.

2.01 PIPE AND FITTINGS

A. Ductile-iron pipe water main shall meet all the requirements of the latest revision of ANSI/AWWA C151/A21.51. Pipe shall be furnished in eighteen-foot or twenty-foot lengths, unless otherwise required. All joints, to include joints for fittings, valves and hydrants, must be of the push on joint type and compatible tyton joint gaskets. Ductile iron pipe must be designed in accordance with the latest revision of ANSI/AWWA C150/A21.50 to meet requirements for Pressure Class 350.

B. Ductile iron pipe and fittings shall be double-cement lined with an approved bituminous seal coat in accordance with ANSI/AWWA C104/A21.4.

C. Ductile iron fittings shall meet all the requirements of the latest revision of ANSI/AWWA C110/A21.10 for full body fittings and ANSI/AWWA C153/A21.53 for compact fittings for a minimum working pressure of 250 psi and be of the push-on joint type. Plugs, where shown on the plans, shall be solid mechanical joint plug type.

D. Restrained mechanical joints of the wedge action type shall use a follower gland and shall include a restraining mechanism which, when activated, impart multiple wedging action against the pipe, increasing its resistance as the pressure increases. Twist off nuts shall be used to insure proper actuating of the restraining device. Restrained mechanical joints for ductile iron pipe shall be Megalug, Series 1100, or approved equal. Mechanical joints shall be in conformity with the requirements of the latest revision of the ANSI AWWA C111/A21.11. Bolts and nuts must be type 304 stainless steel.

E. Push-on joints shall meet all requirements of ANSI/AWWA C111/A21.11. Push-on joints shall consist of a ductile-iron bell provided with a recess to receive a circular molder rubber gasket to effect the joint seal. A rubber gasket and sufficient lubricant to assemble the joint shall be furnished with each joint. The lubricant shall have no deleterious effect upon the color, taste or odor of potable water and shall not be corrosive to either the pipe or gasket. Pipe furnished with push-on type joints shall be equal in strength and leak tightness to pipe furnished with mechanical joints as specified when installed under identical conditions, and shall meet all other requirements of these specifications. In addition to the above requirements, the gasket and lubricant shall conform to the latest revision of ANSI/AWWA C111/A21.11. When it is necessary to utilize a locking mechanism for a push-on joint upstream or downstream of a restrained mechanical joint, field-lok gaskets or equal shall be utilized and shall be used in conformance with DIPRA Standards for restraint distance from a restrained mechanical joint fitting.

F. All pipe and fittings shall be manufactured in the United States of America.

G. The ENGINEER shall witness the delivery and unloading of all pipe and collect the appropriate manufacturer's certificate of compliance per Section 1.04 of this Specification.

2.02 VALVES

A. All valves installed under this Specification shall conform to the applicable requirements of ANSI/AWWA C500, C504 and C509 standards governing construction materials and workmanship. Each valve shall carry the name or trademark of the manufacturer. All valves shall have operating nuts that turn to the right (clockwise) to open.

B. Resilient-Seated Gate Valves

1. Resilient seated gate valves shall conform to the applicable requirements of ANSI/AWWA C515. Valves shall have a minimum working pressure of 250 psi. The gate shall be ductile iron encased in a bonded synthetic rubber to form resilient seating surfaces. Stem shall be bronze with a non-rising design and double o-ring packing. Joints shall be push-on type.

2. Resilient Seated Gate Valves shall be manufactured by American Flow Control or Clow.

C. Tapping Sleeves and Valves

1. Tapping sleeves shall be full length of heavy-duty stainless steel construction designed for use with the type of pipe to be tapped. Tapping sleeve flange and body shall be type 304 stainless steel. Bolts and nuts shall be 304 stainless steel. Gasket shall be full circumferential SBR compounded for water service. Tapping sleeve shall contain a test plug to assure seal prior to tapping. Tapping sleeve shall be JCM Industries 432; Romac Industries SST; Ford FAST, Powerseal 3490AS; Dresser 630 or equal.

2. Tapping valves shall meet the specifications for gate valves except that the valve shall have a flange compatible with the tapping sleeve.

3. The tapping sleeves and valves shall be subjected to a hydrostatic pressure of 200 psi. The sleeves and valves shall be maintained under pressure for a minimum continuous period of 5 minutes by pumping potable water into the sleeve. Upon any visual leakage observed by the ENGINEER, the tapping sleeve and valve shall be removed and replaced, and the test repeated at the CONTRACTOR's expense to the satisfaction of the ENGINEER.

D. Corporation Stops

1. Corporation stops used for insertion into mains shall be ball valve type. All stops shall have no lead brass bodies, keys, stem washers and nuts. Inlet threads shall conform to the latest revision of AWWA C800. The outlet connection shall be of the compression type to receive copper service pipe.

E. Valve Boxes

1. Valves boxes shall be 5-1/4-inch and be of cast-iron construction. They shall be of three-piece, screw-type adjustment design. All valve boxes shall be installed flush with the top of the proposed site grade. Cover shall be designed to be removed easily to provide access to the valve. The base shall not rest upon the valve assembly. Valve boxes shall be Tyler 6860 Item DD with number 6 base, or equal.

F. Valve Extensions

1. All gate valves with operating nuts at a distance greater than 6.5 feet below ground surface shall be provided with an extension stem. The length of the extension stem shall reach within 6.5 feet of the ground surface. Details of the extension system and method of installation shall be approved by the ENGINEER prior to installation.

G. Post Indicators and Valves

1. Post indicators, when specified, shall be American Flow Control series A240 or Clow series 2945A with aluminum plates indicating OPEN and SHUT. Post indicators shall open left.

2. Post indicator valves shall be American Flow Control Model 2500 or Clow model F-6120. All valves shall open left.

3. Post indicators and their corresponding valves must be made by the same manufacturer.

4. Bollards must be placed to protect post indicators, except as specified by the ENGINEER.

5. Bollards shall be 4-inch diameter galvanized schedule 40 steel posts 36 to 48 inches high with minimum depth of 24 inches. The posts shall be set in and filled with 3000 psi concrete. Bollards protecting hydrants and PIVs shall be painted red.

2.03 GATEWELLS

A. Gatewells shall conform to the latest revision of ASTM C478 for Precast Reinforced Concrete Manhole Sections. Section joints shall be rubber gasketed and shall conform to ASTM C990. Cone sections shall be eccentric, with an offset step configuration.

B. All gatewell components shall have the name of the manufacturer stenciled on the inside. The lettering shall be a minimum of 4-inches high.

C. Gatewells constructed over an existing water main shall have a doghouse mudded to an 8-inch thick cookie. All other gatewells shall have precast integral base sections.

D. Mortar for masonry or plastering outside of gatewells shall be made of one part of Portland Cement to two parts fine aggregate. Mortar materials and mixing shall correspond, in general, to those for concrete. All openings in gate wells shall be closed with brick and mortar in a manner that will make them watertight.

E. Gatewell steps shall be reinforced polypropylene coated steel. They shall be M.A. Industries models PS1-PF or PS1-B, or approved equal.

2.04 GATEWELL FRAMES AND COVERS

A. Gatewell frames and covers shall weigh not less than 350 lbs. Each frame and cover shall have machined bearing surfaces and shall be suitable notched for convenient removal of the cover.

B. Frames and covers shall be East Jordan Iron Works Model 1040Z frame with 1040 A cover. Each cover shall have the Pittsfield Township logo and the letters "PITTSFIELD TWP WATER" cast integrally into the cover.

C. All frames and covers shall be coated at the place of manufacturer with coal tar pitch varnish or other asphaltum coating approved by the ENGINEER.

2.05 GATEWELL CONNECTIONS

A. Water pipe to gate well connections shall be through a watertight flexible pipe-to-manhole connector, which shall be securely clamped into a core-drilled port. Pipe ports shall be core-drilled at the point of manufacturer and shall be accurately located within 1/2-inch of the proposed water main centerline. Flexible pipe-to-manhole connectors shall meet the requirements of ASTM C923 and shall be NPC, Kor-N-Seal, or equal.

B. All non-rubber components including wedges, bands and pipe clamps shall be stainless steel.

2.06 GATEWELL ADJUSTMENTS

A. All final grade adjustment of gatewell cover and frame assemblies shall be completed utilizing injection molded High Density Polyethylene (HDPE) adjustment rings as manufactured by Ladtech, Inc., or approved equal. The adjustment rings shall be manufactured from polyethylene plastic meeting the requirements of ASTM D4976. Brick adjustments are not acceptable.

B. All adjustment for matching road grade shall be made utilizing a molded indexed slope ring.

C. Each adjustment ring shall be sealed with a 3/16 to 1/4-inch bead of butyl rubber sealant per the manufacturer's instructions. Sealant shall meet the requirements of ASTM C990.

D. All castings and adjustment rings shall be securely fastened to the cone of the structure with four 3/8-inch threaded rods. The rods shall be galvanized or stainless steel anchored to the structure with Redhead Trubolt concrete anchors, or equal. Stainless steel or galvanized nuts and washers shall be used to attach the casting.

E. When the depth of the gate well requires an adjustment greater than the maximum allowed, the CONTRACTOR shall provide additional pre-cast gate well barrel sections required to maintain acceptable chimney heights.

2.07 HYDRANTS

A. Fire hydrants shall comply with the latest revision of ANSI/AWWA C502. Hydrants shall be compression type to open with the pressure. They shall have a 5-1/4" valve opening and 6" mechanical joint inlet. Hydrants shall have two 3-1/2" (4.05" O.D.) pumper connections with National Standard 7-1/2 threads per inch. All hydrants shall have City of Ann Arbor standard thread pattern.

B. Fire hydrants shall have an inside barrel dimension of not less than 7.375" I.D. from top to bottom. The 1-1/8" pentagon operating nut shall open left (counter clockwise).

C. All nozzles shall be on a removable head with a flange so that they may be rotated by changing the position of the flange.

D. Hydrant shall be fully bronze mounted, including top of the operating stem where it passes through the double o-ring seal in the bronze packing gland. The forged operating stem in the base and the valve seat shall also be of bronze. The molded valve shall be of compositive rubber and the cast iron valve clamps shall be packed with o-ring seals and held tight to the stem by a threaded bronze hex retainer ring and threaded bronze locknut, anchored with set screws.

E. Hydrant shall be designed for 150 psi working pressure and tested to 300 psi. Those portions of the hydrant above grade shall have two coats of red enamel. All unpainted surfaces shall have two coats of coal tar pitch varnish.

F. The hydrants shall be EJIW WaterMaster 5BR-250 with mechanical joint connections and break flange barrel with standard head.

G. Hydrant bolts located below grade shall be type 304 stainless steel

H. All hydrants shall have a 4" Harrington Integral Hydra-Storz (HIHS) adaptor. The HIHS shall meet the requirements of AWWA C502 regarding material and pressure testing. Stortz nozzle shall have a brass metal face and hard anodized ramps and lugs. The aluminum finish shall be hardcoat anodized to MIl-A-8625f, type 3 dark gray. The adapter shall be made from forged or extruded 6061-T6 aluminum.

I. The blind cap shall have hard anodized aluminum Storz ramps and lugs, made of forged or extruded 6061-T6 aluminum, the cap shall be equipped with suction seal. The cap shall be connected to the adapter or the hydrant with 0.125 vinyl coated aircraft cable.

J. Fire hydrant extensions shall be manufactured by the hydrant manufacturer for use with the model hydrant being installed.

K. Hydrants adjacent to truck routes on commercial developments shall be protected by bollards.

2.08 SERVICE LEADS

A. Pipe for service leads 1-inch to 2-inch shall be soft annealed Type K copper. Service leads 4-inch to 8-inch shall be Pressure Class 350 Ductile Iron, Double cement lined.

B. Curb Stops

1. Curb stops used for service connections shall be ball valve type. All parts shall be no lead brass. Both the inlet and outlet connections shall be of the compression type to receive copper service pipe. Curb stops shall be consistent with the most current shop drawing checklist posted on the Township website.

C. Curb Boxes

1. Curb boxes shall be the Bibby Screw Style V010 with S169 top, V201 bottom, V223 extention, and V240 water cover . All curb boxes shall be coated inside and out with a tar base enamel. The minimum bury shall be 5'-0" (60") and the maximum 6' (72"). Curb boxes shall be consistent with the most current shop drawing checklist posted on the Township website.

D. Couplings

1. Couplings used for service connections shall be located outside the pavement and more than 10 feet from any building wherever possible. They shall have a three part union, and both connections shall be of the compression type to receive copper service pipe. All parts shall be no lead brass..

2. All service connections between two copper service pipes (two-inch or less in diameter) located under the pavement or within 10 feet of a building shall be connected using wrought copper, solder-sweat type couplings conforming to ASME B16.18 or ASME B16.22. Fittings shall bear made in USA labels. Joining of copper piping shall be a solder-sweat connection using lead free Silfos. The use of 95-5, Tin-Antimony or equivalent solders will not be allowed.

2.09 TRACER WIRE

A. Tracer wire to be used on open cut pipe shall be AWG #12 single strand copper with blue 30 mil HDPE insulation. Connections shall be made using 3M DBR-6 wire connectors, or equal.

2.10 POLYETHYLENE ENCASEMENT

A. All ductile iron pipe and fittings must be polyethylene encased. In addition, the initial 24-inches of copper service lead must be encased from the corporation stop. Polyethylene encasement must be manufactured in accordance with the requirements of the latest revision of ANSI/AWWA C105/A21.5.

B. Polyethylene Encasement shall be black linear low-density polyethylene with a minimum thickness of 8 mils.

C. The wrap shall overlap the joint by 12 inches to either side and be secured to the pipe with polyethylene adhesive tape.

3.00 EXECUTION

3.01 EXCAVATION AND BACKFILL

A. All excavation and backfill shall conform to the Earthwork specification.

3.02 PIPE INSTALLATION

A. The installation of ductile iron water main must conform to the requirements of ANSI/AWWA C600.

B. Any pipe damaged in transport or handling shall be rejected and removed from the site of the work.

C. Before lowering in the trench, and while suspended, each pipe and fitting shall be inspected for defects. Defective, damaged or unsound pipe shall immediately be removed from the construction site. The interior of each pipe shall be inspected for cleanness and cleared of all dirt and foreign matter before being lowered into the trench.

D. In handling and placing ductile iron pipe and fittings, no metal shall be used in contact with the inside of the pipe to fit or support the pipe. The pipe shall be moved only through the use of belt slings or automatic release type pipe tongs. Care shall be taken not to injure the pipe or pipe coating, and no damaged or imperfect pipe shall be used in the work except that minor damage to pipe coating may be repaired subject to the review of the ENGINEER.

E. Unless otherwise directed, pipe shall be laid with bell ends facing in the direction of laying. After a length of pipe is placed in the trench, the spigot shall be centered in the bell of the adjacent pipe; the pipe shoved into position and brought to a true alignment. It will then be secured with sand backfill tamped under and on each side of the pipe, except at bell holes. No earth or other foreign matter shall be allowed to enter the joint space.

F. All excavation and backfill above the pipe shall conform to specifications under Earthwork and as shown on the Drawings.

G. A minimum of 18-inches vertical clearance shall be provided between the water main and any existing underground facility, unless otherwise approved by the ENGINEER. Whenever a main is installed under any existing utility line such as gas, buried electric power, telephone line, sewer or water, provisions shall be made to properly support or distribute any concentrated load to avoid settlement and possible failure of either main. Such provisions shall consist of concrete bedding of the main, complete concrete encasement, or some other method as shown on the plans. Water mains passing under sewers, in addition, shall be protected by providing:

1. A vertical separation of at least 18-inches between the bottom of the sewer and the top of the water main.

2. Adequate structural support for the sewer to prevent excessive deflection of joints and settlement of the sewer about the water main; i.e., a concrete saddle under the pipe with a span length extending to undistributed earth bearing.

H. Water mains shall be installed at least 10 feet horizontally from any existing or proposed gravity sanitary or storm sewer, septic tank, or subsoil treatment system. The distance shall be measured edge to edge.

I. In assembly of push-on or shove type joints, the bell socket recess and the gasket shall be wiped clean and the gasket placed properly in position. A thin film of lubricant shall then be applied to the surface of the gasket to come into contact with the entering pipe. The plain end of the entering pipe shall be cleaned and then entered and forced home to the base of the socket.

J. Where necessary to cut pipe, cutting shall be done with approved tools and cut ends of pipe shall be square and regular. Cutting shall be done in a manner to avoid damage to lining and coating. Minor damage may be repaired subject to review of the ENGINEER.

K. To prevent trench water from entering the pipe, joints, which for any reason may not be completed as the pipe is laid, shall be thoroughly packed with approved material, in a manner to make them watertight. Open ends of fittings shall be tightly closed with approved plugs and well packed, as shall the end of the last pipe laid whenever work is not in progress.

L. Each pipe shall be laid accurately to the line and grade shown on the Plans. Wherever deflections at joints are required by changes in grade or alignment or to plumb valve stems, the deflection at any bell and spigot joint shall not exceed that which will cause the spigot end of pipe to be away from home in the bell of the adjacent pipe a distance of 1/4 inch at the point of greatest opening.

M. The deflection at any mechanical joint shall not exceed three-quarters of the maximum deflection recommended by the manufacturer or 3 degrees, whichever is more conservative of the joint used.

N. The CONTRACTOR shall not be entitled to any additional compensation because depth is more than specified at certain locations or due to clearances at manholes, or due to unforeseen obstacles, or occasioned in order to avoid undue changes in grade.

O. Pipe shall be laid at depths to provide minimum cover of 5' - 6" over the top of the pipe unless otherwise noted on the Drawings or elsewhere in these specifications.

3.03 GATE VALVES AND WELLS

A. All pre-cast section joints and lift holes shall be pointed and plugged, inside and outside, with mortar.

B. Gate valves shall be of the size and installed at the location as shown on the plans. They shall be set square with the line of the main, and unless otherwise directed by the Township ENGINEER, all gate valves shall be set with stems plumb. At each side of gate valve, the CONTRACTOR shall furnish and install a 1-inch corporation stop on the main as shown on the Standard Details.

C. All gate valves with operating nuts at a distance greater than 6.5 feet below ground surface shall be provided with an extension stem.

3.04 HYDRANTS

A. Fire hydrants shall be constructed in accordance with the details shown on the plans. Finish grade level to center of nozzle caps shall measure between 24 and 30 inches. A maximum of one hydrant barrel extension and one operating stem extension may be used to accommodate changes in grade. Under no conditions shall extended hydrant have more than one coupling in the operating stem. Pumper connections shall point toward the street.

B. Fire hydrants shall be installed with barrel vertical and properly based. Concrete thrust blocks shall be placed behind the hydrant, tee, and every bend. Care should be taken to insure the drain holes on the hydrant are not plugged by the thrust blocks. Hydrant shall be set in 1 yard of coarse gravel for drainage purposes. If ground water is encountered, the drain hole shall be plugged as directed by the manufacturer. The backfill shall be sand thoroughly tamped around the hydrant and valve box in 1 ft layers.

C. Fire hydrant and gate valve shall be set apart 24 inches. Gate valves and valve box shall be as specified under the valve paragraphs of this section.

D. Hydrant leads shall have a minimum of 5.5 feet of cover in all areas, including crossings through ditch sections.

E. Hydrants shall be carefully plumbed, braced and backfilled so they remain plumb.

F. All grade, facing, and vertical alignment adjustment of hydrants shall be completed prior to pressure testing and charging of the hydrants.

G. All hydrants shall be cleaned and painted with a rust inhibitive, oil base paint such as "rustoleum" or approved equal to the Township's color code prior to acceptance.

H. The lubricant reservoirs in all hydrants having such construction shall be filled with a lubricant acceptable to the Michigan Department of Environmental Quality and recommended by the hydrant manufacturer.

I. Backfilling around fire hydrants shall be carefully tamped sand in 12-inch layers from the centerline of the lead main to a height of 1-foot below finished grade.

J. CONTRACTOR shall place burlap sack or equivalent material over the hydrant nozzles after installation.

K. Fire hydrant nozzles shall be aligned as required by the Township Fire Marshal.

L. Fire hydrant extensions shall be provided as necessary so that the safety flange is located at or above surface grade.

3.05 TRACER WIRE

A. Tracer wire shall be installed along the top of all water mains. For directional drilling, the tracer wire shall be installed at the same time as the pipe. For open cut construction, the tracer wire shall be installed at a height of not more than 6 inches above the main line pipe or service leads. Wire shall be extended to all hydrants, blow-offs, dead ends, service leads and post indicator valves. Tracer wire shall be brought to grade, leaving enough excess material to avoid loss or damage to the wire during construction and subsequent activities. Wire shall be trimmed to finish grade following completion of the landscaping.

B. When tracer wire is to be run along short offsets (less than 20 feet), a loop of wire shall be utilized to loop to the end of the offset, bring the loop to grade and terminate it in an approved manner. For service leads and offsets of more than 20 feet in length, or installed by directional drilling method, a splice may be utilized to make the connection at the main. The tracer wire shall then be installed and terminated in an approved manner.

C. Tracer wire terminations shall be made by one of the following methods:

1. Tracer wire shall be terminated at hydrants by tying off the wire at the head flange, leaving excess material for future trimming following landscape activities.

2. Terminations at valve/curb boxes, post indicators, valves and blow-offs shall be made with 2 wraps of wire at grade around the box or pipe, leaving excess material for future trimming following landscaping.

3. Gatewell terminations shall be made by running the tracer wire through the pipe opening in the wall, down to and across the floor to the steps, up the wall and secure to the top step leaving the stub accessible at the casting. Wire shall be run through the gatewell such that it does not create a hazard.

4. Terminations at existing water mains without tracer wire shall be made at the nearest hydrant or gate well as outlined above. If no hydrant or gatewell is available, an upper section of valve box shall be installed with the tracer wire stubbed up inside

D. When connections are made to existing water mains which do not have tracer wire, the following method most applicable to field conditions shall be used.

1. When connection is made at/near a valve or hydrant, the connection shall be made in the same manner as the termination at said structures in Item C(2) above.

2. When connection takes place in a gatewell, the same procedure shall be used as in termination at a gatewell (see Item C(3) above).

3. If no valve or hydrant is available, the upper section only of a valve box shall be set with the tracer wire stubbed up inside.

3.06 POLYETHYLENE ENCASEMENT

A. The polyethylene encasement must be installed in accordance with the specifications and requirements of ANSI/AWWA C105/A21.5. For open cut applications a single wrap is required, and for directional drill applications a double wrap is required.

B. The polyethylene encasement must be taped and overlapped at pipe joints and must be taped in a spiral configuration along the length of the pipe.

3.07 CONNECTION TO EXISTING MAINS

A. All connections to existing water mains shall be made at the locations as shown on the plans.

B. All valves shall be operated by the Pittsfield Township Utilities Department.

C. Prior to beginning construction of the final connections, the CONTRACTOR shall provide sequence of all final connections to the existing system and coordinate a meeting between the ENGINEER, OWNER and CONTRACTOR in the field to review the procedure.

D. When making a dry connection to an existing main, the existing main to which a connection is to be made shall be isolated by the closing of the necessary existing valves, and the water from the existing main shall then be pumped out or removed by other means so the connection may be made in the dry. After the connection has been acceptably made, the portion of the new line to the nearest valve shall be satisfactorily tested and disinfected, along with the drained portion of the existing water main, before the isolated existing main is placed back in service, except as the ENGINEER may otherwise direct. In as much as residents served by this isolated main will be temporarily out of water during this period, the work shall be executed as rapidly as possible, and the time of, and the procedure in, making such connections shall be subject to the review of the ENGINEER. Such work may be required to be done at night in order to minimize inconvenience of water users. The CONTRACTOR shall not be entitled to any additional compensation because of night work or other special requirements in work under this section.

E. The CONTRACTOR shall make particular effort, prior to bidding, to ascertain whether or not valves in the existing mains to be connected to the new mains are so located as to provide isolation. If valves are not found to be adequate, then the CONTRACTOR shall utilize other means to make the connections with a minimum of interruption to service.

F. When making a wet tap connection to an existing main, a tapping sleeve designed for the type of pipe being tapped shall be utilized and the tap shall be made in accordance with the manufacturer of the tapping equipment.

G. Wherever adapters are required to properly connect the pipe with existing pipe or other material or manufacturer, the nominal I.D. of adapters shall be the same size as the nominal diameter of pipe connected thereto. Adapters shall also be furnished and used as required by the manufacturer for connection to fittings.

3.08 BEDDING

A. Ductile iron pipes shall be fully enclosed in polywrap and laid on a compacted sand cushion, 4 inches thick. Sand shall conform to fine aggregate 2NS as defined in 2003 MDOT, Section 902.

B. 2NS sand bedding material shall be placed around and above the main to a height of 12 inches above the main.

C. Sand shall be compacted on top of the 12-inches of sand above the pipe to not less than 95 percent of the maximum unit density as determined at optimum moisture content.

Pittsfield Charter Township
6201 W. Michigan Ave.
Ann Arbor, MI 48108-9721
48108-9721
Tel. 734.822.3101
www.pittsfield-mi.gov

Revision	By	Appd.	YY.MM.DD
SPEC. UPDATES	MRH	DRW	14.01.24
TWP REV	BWA	DRW	11.04.27
SPEC. UPDATES	BWA	DRW	10.10.25
SPEC. UPDATES	TTN	DRW	10.01.19

Issued	By	Appd.	YY.MM.DD
File Name: W-02	BWA	DRW	DRW	07.10.01
	Dwn.	Chkd.	Dsgn.	YY.MM.DD

Permit-Seal

Client/Project
PITTSFIELD TOWNSHIP

Pittsfield Township, Michigan

Title
WATER MAIN SPECIFICATIONS

Project No.
2075001300

Scale

Revision

STORM SEWER AND DRAINAGE STRUCTURES

1.00 GENERAL

1.01 DESCRIPTION

A. Furnish all labor, tools, equipment and materials to construct all storm sewers, and drainage structures as herein specified. No sewers shall be accepted until the sewer system has passed the system acceptance tests.

1.02 TESTING

A. General

1. The CONTRACTOR shall furnish all equipment and personnel to conduct system acceptance tests as specified herein on all completed sewers. All tests shall be conducted under the supervision of the ENGINEER. No acceptance tests shall be conducted until the entire sewer system is constructed or just prior to placing the line in service providing the sewer pipe has been installed for not less than 30 days.

B. Test for Alignment

1. All sewers shall be laid accurately to the line and grade designed by the ENGINEER. The sewers will be tested for alignment by shining a light through the pipe at a manhole and viewing the light from an adjacent manhole. Any section of sewer in which a light cannot be seen from one manhole to the next shall be corrected to the satisfaction of the ENGINEER to pass this test.

C. Material Tests

1. The CONTRACTOR shall have tests of pipe strength made by an independent testing laboratory. Tests of up to 4 lengths of sewer pipe per hundred lengths may be required to show compliance with the Specifications. All pipe delivered to the job site shall be accompanied with a manufacturer's certificate of compliance to the Specifications.

D. Submittals

1. The CONTRACTOR shall submit shop drawings, or data sheets for all castings, steps and manholes.

2. The CONTRACTOR shall submit certification letters for all pipes. All letters must contain the following: Contractors name, project name, township name, current date, certification of pipe provided and letterhead of the certifying company.

2.00 PRODUCTS

2.01 PIPE

A. Reinforced concrete pipe and manhole tees shall be no less than the latest revision of ASTM C76, with the class designation as shown on the Plans or in the Proposal.

B. Concrete pipe shall have tongue and groove gasketed premium joints.

C. Corrugated steel pipe shall meet the requirements of AASHO M-190 for coated pipe latest revision. Minimum gage thickness shall be as shown on the Plans.

2.02 REINFORCED CONCRETE MANHOLES

A. Manholes shall conform to the current ASTM Specifications for precast reinforced concrete Manhole Sections, serial designation C478. Manhole section joints shall conform to ASTM Designation C990. All cones shall be eccentric with an offset step configuration. Concrete adjustment rings or riser rings shall not be used for adjusting the height of the structure.

B. All manhole component parts shall have the name of the manufacturer stencilled on the inside. The lettering or logo shall be a minimum of 4 inches high.

2.03 MORTAR FOR MANHOLES

A. Mortar for plastering manholes and drainage structures shall be made of one part Portland cement and two parts fine aggregate.

2.04 BRICK AND BLOCK

A. Brick for brick and mortar structures shall conform to the current ASTM Specification C32. Block for block and mortar structures shall conform to the current ASTM Specification C135.

B. The concrete block masonry used to construct manhole and catch basin walls shall be solid curved blocks with the inside and outside surfaces curved to the required radii. The blocks shall have tongue and groove or other approved type of joint at the ends so that the units interlock to form a strong, rigid structure. Curved blocks shall have the inside and outside surfaces parallel.

C. The block shall not exceed 18 inches in length or 8 inches in depth (height). No block shall be less than 6 inches in width (thickness). All blocks in one structure shall be of the same height dimension. The blocks shall be designed for length so that only full-length or half-length blocks are required to lay the circular wall of any one course.

D. Blocks intended for use in the cones or tops of manholes and catch basins shall have such shape as may be required to form the structure as shown on the Plans with inside and outside joint not to exceed 1/4-inch in thickness.

2.05 STRUCTURE FRAMES AND COVERS

A. Structures frames and covers shall weigh not less than 350 lbs. Each frame and cover shall have machined bearing surfaces and shall be suitably notched for convenient removal of the cover. Each solid manhole cover shall be marked Storm Sewer with letters integrally cast into the cover.

B. Frames and Covers shall be as follows:
1. For use on manholes: East Jordan 1040Z, with Type B cover lettered "STORM SEWER", or equal. Structures 24-inches in diameter shall have the 1045 Z frame.
2. For use on drainage structures in paved areas: East Jordan 1040Z, with Type M1 cover, with "DUMP NO WASTE" lettering and trout logo.
3. For use on drainage structures in curbed areas: East Jordan 7045 or 7065, with "DUMP NO WASTE" lettering and trout logo.
4. For use on drainage structures in landscaped areas: East Jordan 1040Z, with 1040 N 7", with "DUMP NO WASTE" lettering and trout logo.

C. All frames and covers shall be coated by the manufacturer with coal tar pitch varnish or other asphaltum coating reviewed by the ENGINEER.

D. All covers for drainage structures shall have storm drain markers affixed to the nearest available flat surface. The storm drain markers shall be manufactured by Das Manufacturing and shall be #SDR "No Dumping. Drains to River." The storm drain markers shall be installed per the manufacturer's recommendations.

2.06 MANHOLE STEPS

A. Steps shall be plastic coated steel. They shall be M.A. Industries PS1-PF for precast manholes, PS1-B for block manholes, or equal.

2.07 DRAINAGE STRUCTURES

A. All manholes and catch basins shall be precast unless otherwise specified.

B. Manhole and catch basin bottoms shall be concrete and top of slab shall have a troweled finish.

C. Upon approval by the ENGINEER, the manhole and catch basin walls may be constructed of concrete block masonry or concrete manhole pipe conforming to the requirements of the specifications previously listed. Construction shall be in accordance with the details for Catch Basin and Storm Sewer Manhole shown on the Plans.

D. A plaster coat of mortar 1/2-inch in thickness shall be applied to the inside and outside surface of all manholes and catch basins constructed with concrete block masonry or sewer brick. The inside coat of mortar shall be applied in a smooth, neat workmanlike manner.

E. Final adjustment of the top of manholes and catch basins, so that the manhole or catch basin cover is at finished elevations as shown on the Plans or meets the finished surface, may be accomplished with sewer brick conforming to the previously listed Specifications. The total height of brick for this purpose shall not exceed 9 inches. The total chimney height shall not exceed 18 inches.

F. All block and brick masonry units shall be laid in a full bed of mortar. The inside joints of the block masonry construction shall be tooled in a neat and workmanlike manner.

3.00 EXECUTION

3.01 EXCAVATION AND BACKFILL

A. All excavation and backfill 12 inches above the crown of pipe shall conform to Section 2.04, Earthwork of these specifications.

B. The trench shall be backfilled closely behind the pipe laying. Unless otherwise directed or permitted by the ENGINEER, the backfilling shall follow and be completed to the top of the trench within four pipe lengths behind pipe laying.

3.02 BEDDING

A. Concrete pipe shall be laid on a compacted granular material placed on the bottom of the trench to a depth of not less than 4 inches. Where indicated on the Plans or required by the ENGINEER, concrete encasement or cradle shall be used.

B. For all pipes, compacted aggregate material shall be placed at the sides of the pipe in 12-inch lifts and cover not less than 12 inches above the crown of the pipe.

C. "Granular Material" shall be MDOT class II, placed in not more than 6-inch layers and compacted to not less than 90% standard density.

3.03 PIPE INSTALLATION

A. All pipe shall be laid true to the required lines and grades. All trenches when pipe laying is in progress, shall be kept dry, and all pipes and fittings shall be uniformly supported on a properly trimmed bedding with holes at each joint to receive bells. All pipe shall be laid with bells uphill.

B. The grade as shown on the profiles is that of the pipe invert and that to which the work must conform. The grade shall be kept by laser or other tools which shall be furnished by the CONTRACTOR at his expense. Each pipe shall be laid accurately to the line and grade as shown on the Plans and in such manner as to form a close concentric joint with the adjoining pipe and prevent sudden offsets of the invert. The interior of sewers shall, as the work progresses, be cleaned of all dirt, cement, debris and other superfluous materials of every description. Bulkheads shall be used to keep foreign materials out of the open end of the sewer when work is not in progress.

C. The location of the piping as shown on the Plans has been determined to avoid, insofar as possible, interference with trees or structures or fixtures above ground and other underground mains, services, utilities or structures. Any change in location or alignment of piping, which may be found more feasible or practicable as the work progresses, shall be made by the CONTRACTOR, as the ENGINEER may direct.

D. All pipe shall be carefully lowered and moved into position in trench or vault in a controlled manner such as will prevent damage to the pipe and any coatings or lining. An excessive amount of scratching on the surface of the concrete pipe will be considered cause for rejection.

E. All cutting of the pipe shall be done in a neat workmanlike manner with the least amount of waste and without damage to existing or new lines. A fine toothsaw, tubing cutter or similar tool may be used to cut concrete pipe. Cuts must be square. Ragged edges shall be removed with a cutting tool or file.

F. Breaks in pipe or joints shall be repaired to the satisfaction of the ENGINEER and at the expense of the CONTRACTOR.

3.04 CONNECTIONS TO EXISTING MANHOLES

A. When a sewer is connected to an existing manhole, a hole adequate to receive the new pipe shall be cored into the manhole.

B. If the existing manhole is of brick construction, a single rowlock of brick shall be turned over the new pipe and the existing manhole brick work shall be cleaned, pointed and given a 1/2-inch mortar coat on the outside surface.

C. For connections to existing precast reinforced concrete manholes, a hole shall be cored into the concrete manhole wall to receive the pipe. Reinforcing steel shall not be cut out shall be bent and replaced in the area that is to be patched. A form shall be constructed over the area of pipe penetration. The formed area shall then be filled with concrete.

D. Closure of the manhole wall shall be made watertight using concrete.

3.05 ANIMAL GRATES

A. Animal grates shall be required on all endsections greater than 12-inch diameter.

PCT February 2008

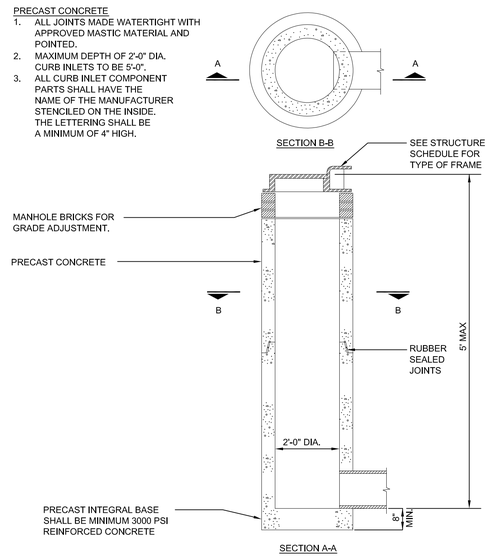

2' DIAMETER INLET

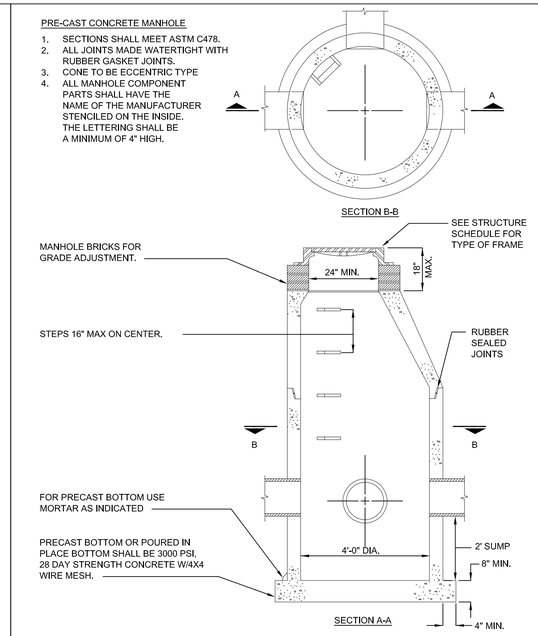

4' DIAMETER CATCH BASIN

AFFIX TO SURFACE ON OR NEAR ALL DRAINAGE COVERS.

STORM DRAIN MARKER

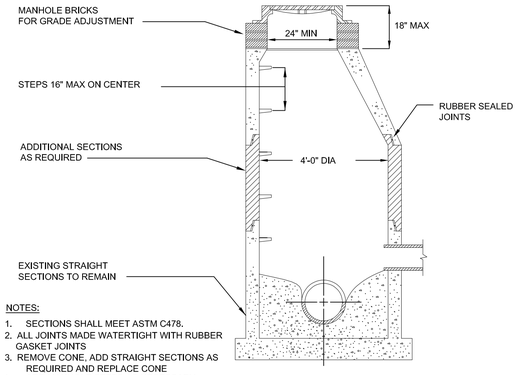

NOTES:
1. SECTIONS SHALL MEET ASTM C478.
2. ALL JOINTS MADE WATERTIGHT WITH RUBBER GASKET JOINTS
3. REMOVE CONE, ADD STRAIGHT SECTIONS AS REQUIRED AND REPLACE CONE
4. ADD MANHOLE STEPS AS NECESSARY
5. ADD ADJUSTMENT RINGS FOR RIM GRADE ADJUSTMENT

MANHOLE & CATCH BASIN RECONSTRUCTION DETAIL

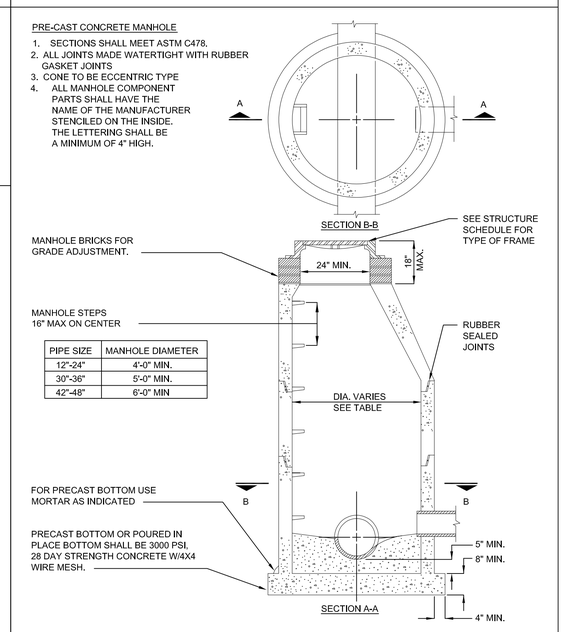

PIPE SIZE	MANHOLE DIAMETER
12"-24"	4'-0" MIN.
30"-36"	5'-0" MIN.
42"-48"	6'-0" MIN

STORM SEWER MANHOLE

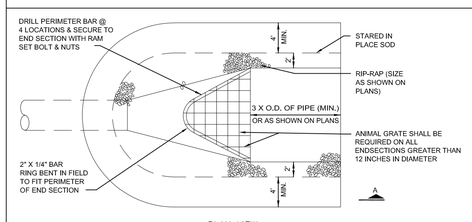

PLAN VIEW

1. RIPRAP THICKNESS AS SHOWN ON PLANS.

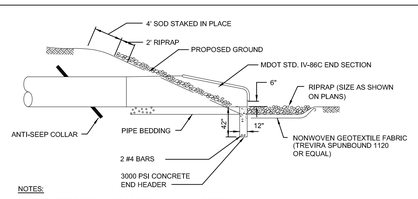

NOTES:
EXTENT OF RIPRAP SHALL BE AS SHOWN HERE OR AS SHOWN ON PLANS, WHICHEVER IS GREATEST.

SECTION A–A

END SECTION AND RIPRAP DETAIL

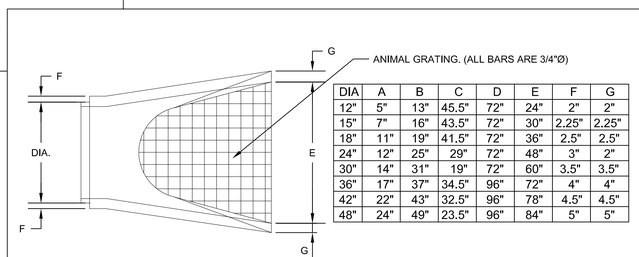

DIA	A	B	C	D	E	F	G
12"	5"	13"	45.5"	72"	24"	2"	2"
15"	7"	16"	43.5"	72"	30"	2.25"	2.25"
18"	11"	19"	41.5"	72"	36"	2.5"	2.5"
24"	12"	25"	29"	72"	48"	3"	2"
30"	14"	31"	19"	72"	60"	3.5"	3.5"
36"	17"	37"	34.5"	96"	72"	4"	4"
42"	22"	43"	32.5"	96"	78"	4.5"	4.5"
48"	24"	49"	23.5"	96"	84"	5"	5"

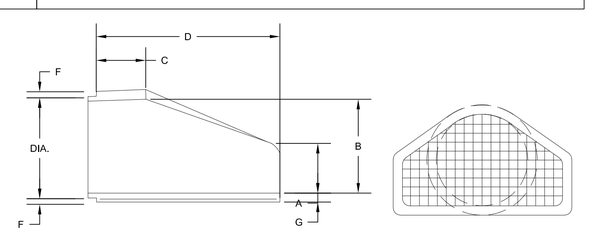

NOTE:
FLARED END SECTIONS SHALL BE MANUFACTURED TO THE CLASS SPECIFICATIONS AS THE PIPE ITSELF.

STANDARD END SECTIONS FOR PRECAST CONCRETE

Pittsfield Charter Township
6201 W. Michigan Ave.
Ann Arbor, MI 48108–9721
48108–9721
Tel. 734.822.3101
www.pittsfield-mi.gov

Revision	By	Appd.	YY.MM.DD
UPDATES	MRH	DRW	14.01.24
TWP REV	BWA	DRW	12.08.09
TWP REV	BWA	DRW	11.04.27
UPDATES	BWA	DRW	10.10.25
UPDATES	TTN	DRW	10.01.20

Issued	By	Appd.	YY.MM.DD
File Name: ST–01	TTN	DRW	07.10.01
	Dwn.	Chkd.	Dsgn. YY.MM.DD

Permit-Seal

Client/Project
PITTSFIELD TOWNSHIP

Pittsfield Township, Michigan

Title
STORM SEWER DETAILS AND SPECIFICATIONS

Project No. 2075001300

Scale NOT TO SCALE

Revision

● MAXIMUM LANDING SLOPE IS 2.0% IN EACH DIRECTION OF TRAVEL. LANDING MINIMUM DIMENSIONS 5' x 5'. SEE NOTES.

●● MAXIMUM RAMP CROSS SLOPE IS 2.0%. RUNNING SLOPE 5% - 7% (8.3% MAXIMUM). SEE NOTES.

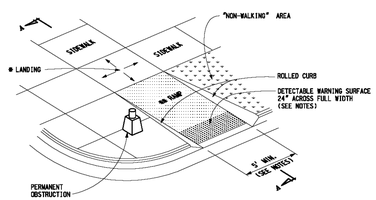

SIDEWALK RAMP TYPE R
(ROLLED SIDES)

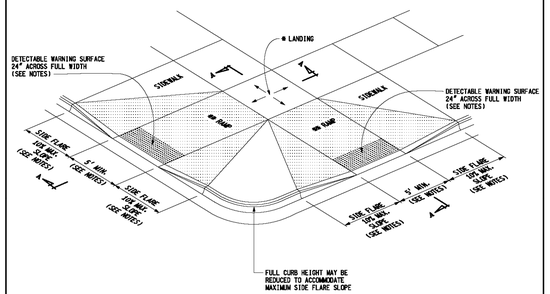

SIDEWALK RAMP TYPE F
(FLARED SIDES. TWO RAMPS SHOWN)

PREPARED BY DESIGN DIVISION

DRAWN BY: R.L.I.

CHECKED BY: W.K.P.

DEPARTMENT DIRECTOR
Kirk T. Steudle

APPROVED BY: DIRECTOR, BUREAU OF FIELD SERVICES

APPROVED BY: DIRECTOR, BUREAU OF DEVELOPMENT

MICHIGAN DEPARTMENT OF TRANSPORTATION
BUREAU OF DEVELOPMENT STANDARD PLAN FOR

SIDEWALK RAMP AND DETECTABLE WARNING DETAILS

F.H.W.A. APPROVAL	12-11-2017 PLAN DATE	R-28-J	SHEET 1 OF 7

● MAXIMUM LANDING SLOPE IS 2.0% IN EACH DIRECTION OF TRAVEL. LANDING MINIMUM DIMENSIONS 5' x 5'. SEE NOTES.

●● MAXIMUM RAMP CROSS SLOPE IS 2.0%. RUNNING SLOPE 5% - 7% (8.3% MAXIMUM). SEE NOTES.

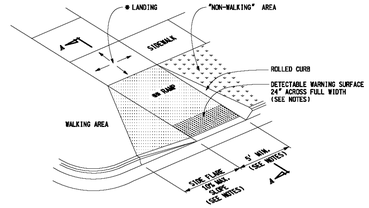

SIDEWALK RAMP TYPE RF
(ROLLED / FLARED SIDES)

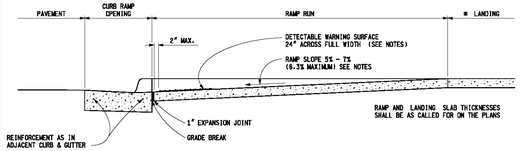

SECTION A-A

CURB TYPE	MAXIMUM RISE (INCHES) A	B
B1	3/4	1
B2	3/4	1
B3	3/4	1
D1	3/4	1
D2	3/4	1
D3	3/4	1
C1	1/2	1/2
C2	1/2	1/2
C3	3/4	1/2
C4	3/4	1/2
C5	1	1/2
C6	1	1/2
F1	1/2	1/2
F2	1/2	1/2
F3	3/4	1/2
F4	3/4	1/2
F5	1	1/2
F6	1	1/2

FOR CURB TYPES SEE STANDARD PLAN R-30-SERIES

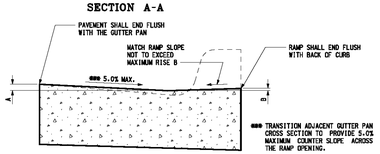

SECTION THROUGH CURB RAMP OPENING
(TYPICAL ALL RAMP TYPES)

MICHIGAN DEPARTMENT OF TRANSPORTATION
BUREAU OF DEVELOPMENT STANDARD PLAN FOR

SIDEWALK RAMP AND DETECTABLE WARNING DETAILS

F.H.W.A. APPROVAL	12-11-2017 PLAN DATE	R-28-J	SHEET 2 OF 7

● MAXIMUM LANDING SLOPE IS 2.0% IN EACH DIRECTION OF TRAVEL. LANDING MINIMUM DIMENSIONS 5' x 5'. SEE NOTES.

●● MAXIMUM RAMP CROSS SLOPE IS 2.0%. RUNNING SLOPE 5% - 7% (8.3% MAXIMUM). SEE NOTES.

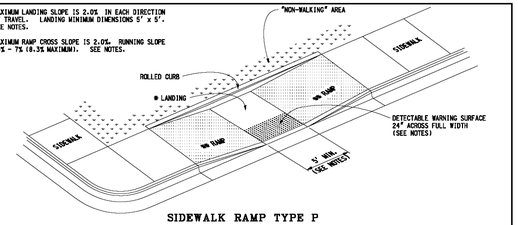

SIDEWALK RAMP TYPE P
(PARALLEL RAMP)
DO NOT USE IN AREAS WHERE PONDING MAY OCCUR

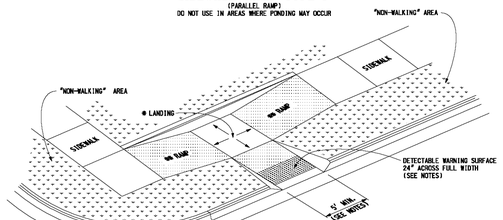

SIDEWALK RAMP TYPE C
(COMBINATION RAMP)

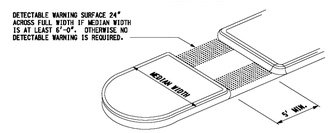

SIDEWALK RAMP TYPE M
(MEDIAN ISLAND)

MICHIGAN DEPARTMENT OF TRANSPORTATION
BUREAU OF DEVELOPMENT STANDARD PLAN FOR

SIDEWALK RAMP AND DETECTABLE WARNING DETAILS

F.H.W.A. APPROVAL	12-11-2017 PLAN DATE	R-28-J	SHEET 3 OF 7

● MAXIMUM LANDING SLOPE IS 2.0% IN EACH DIRECTION OF TRAVEL. LANDING MINIMUM DIMENSIONS 5' x 5'. SEE NOTES.

●● MAXIMUM RAMP CROSS SLOPE IS 2.0%. RUNNING SLOPE 5% - 7% (8.3% MAXIMUM). SEE NOTES.

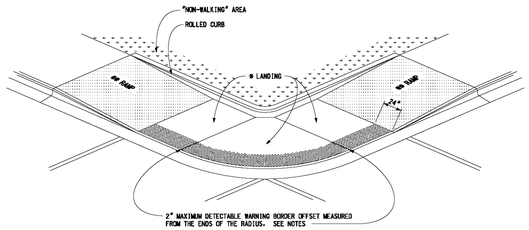

(RADIAL DETECTABLE WARNING SHOWN)

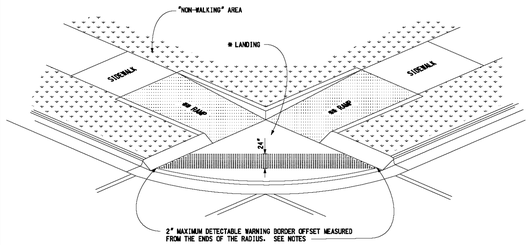

(TANGENT DETECTABLE WARNING SHOWN)

SIDEWALK RAMP TYPE D
(DEPRESSED CORNER)
USE ONLY WHEN INDEPENDENT DIRECTIONAL RAMPS CAN NOT BE CONSTRUCTED FOR EACH CROSSING DIRECTION

MICHIGAN DEPARTMENT OF TRANSPORTATION
BUREAU OF DEVELOPMENT STANDARD PLAN FOR

SIDEWALK RAMP AND DETECTABLE WARNING DETAILS

F.H.W.A. APPROVAL	12-11-2017 PLAN DATE	R-28-J	SHEET 4 OF 7

● THE DETECTABLE WARNING SURFACE SHALL BE LOCATED SO THAT THE EDGE NEAREST THE RAIL CROSSING IS 6' MINIMUM AND 15' MAXIMUM FROM THE CENTERLINE OF THE NEAREST RAIL. DO NOT PLACE DETECTABLE WARNING ON RAILROAD CROSSING MATERIAL.

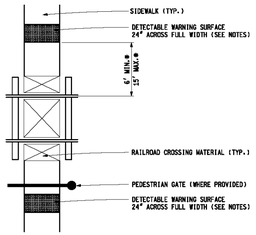

DETECTABLE WARNING AT RAILROAD CROSSING

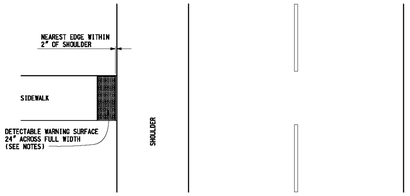

DETECTABLE WARNING AT FLUSH SHOULDER OR ROADWAY

MICHIGAN DEPARTMENT OF TRANSPORTATION
BUREAU OF DEVELOPMENT STANDARD PLAN FOR

SIDEWALK RAMP AND DETECTABLE WARNING DETAILS

F.H.W.A. APPROVAL	12-11-2017 PLAN DATE	R-28-J	SHEET 5 OF 7

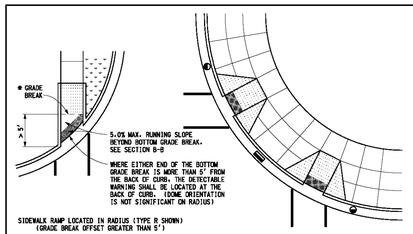

LEGEND

- SLOPED SURFACE
- DETECTABLE WARNING
- "NON-WALKING" AREA
- CROSSWALK MARKING
- PREFERRED LOCATION OF DRAINAGE INLET (TYP.)
- ALTERNATE LOCATION OF DRAINAGE INLET (TYP.)

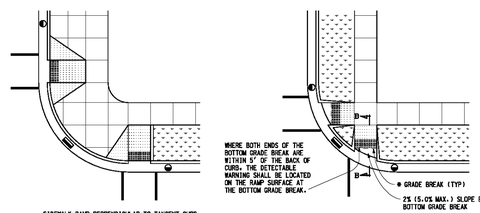

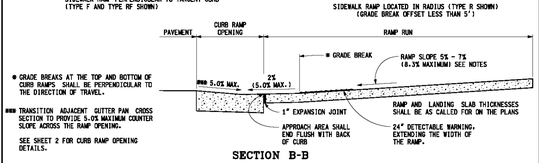

SECTION B-B
SIDEWALK RAMP ORIENTATION

MICHIGAN DEPARTMENT OF TRANSPORTATION
BUREAU OF DEVELOPMENT STANDARD PLAN FOR

SIDEWALK RAMP AND DETECTABLE WARNING DETAILS

F.H.W.A. APPROVAL	12-11-2017 PLAN DATE	R-28-J	SHEET 6 OF 7

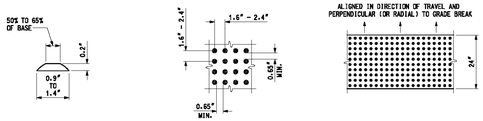

DOME SECTION | DOME SPACING | DOME ALIGNMENT

DETECTABLE WARNING DETAILS

NOTES:

DETAILS SPECIFIED ON THIS PLAN APPLY TO ALL CONSTRUCTION, RECONSTRUCTION, OR ALTERATION OF STREETS, CURBS, OR SIDEWALKS IN THE PUBLIC RIGHT OF WAY.

SIDEWALK RAMPS ARE TO BE LOCATED AS SPECIFIED ON THE PLANS OR AS DIRECTED BY THE ENGINEER.

RAMPS SHALL BE PROVIDED AT ALL CORNERS OF AN INTERSECTION WHERE THERE IS EXISTING OR PROPOSED SIDEWALK AND CURB. RAMPS SHALL ALSO BE PROVIDED AT MARKED AND/OR SIGNALIZED MID-BLOCK CROSSINGS.

SURFACE TEXTURE OF THE RAMP SHALL BE THAT OBTAINED BY A COARSE BROOMING, TRANSVERSE TO THE RUNNING SLOPE.

SIDEWALK SHALL BE RAMPED WHERE THE DRIVEWAY CURB IS EXTENDED ACROSS THE WALK.

CARE SHALL BE TAKEN TO ASSURE A UNIFORM GRADE ON THE RAMP, WHERE CONDITIONS PERMIT. IT IS DESIRABLE THAT THE SLOPE OF THE RAMP BE IN ONLY ONE DIRECTION, PARALLEL TO THE DIRECTION OF TRAVEL.

RAMP WIDTH SHALL BE INCREASED, IF NECESSARY, TO ACCOMMODATE SIDEWALK SNOW REMOVAL EQUIPMENT NORMALLY USED BY THE MUNICIPALITY.

WHEN 5' MINIMUM WIDTHS ARE NOT PRACTICABLE, RAMP WIDTH MAY BE REDUCED TO NOT LESS THAN 4' AND LANDINGS TO NOT LESS THAN 4' x 4'.

CURB RAMPS WITH A RUNNING SLOPE ≤5% DO NOT REQUIRE A TOP LANDING. HOWEVER, ANY CONTINUOUS SIDEWALK OR PEDESTRIAN ROUTE CROSSING THROUGH OR INTERSECTING THE CURB RAMP MUST INDEPENDENTLY MAINTAIN A CROSS SLOPE NOT GREATER THAN 2% PERPENDICULAR TO ITS OWN DIRECTION(S) OF TRAVEL.

DETECTABLE WARNING SURFACE COVERAGE IS 24" MINIMUM IN THE DIRECTION OF RAMP/PATH TRAVEL AND THE FULL WIDTH OF THE RAMP/PATH OPENING EXCLUDING CURVED OR FLARED CURB TRANSITION AREAS. A BORDER OFFSET NOT GREATER THAN 2" MEASURED ALONG THE EDGES OF THE DETECTABLE WARNING IS ALLOWABLE. FOR RADIAL CURB THE OFFSET IS MEASURED FROM THE ENDS OF THE RADIUS.

FOR NEW ROADWAY CONSTRUCTION, THE RAMP CROSS SLOPE MAY NOT EXCEED 2.0%. FOR ALTERATIONS TO EXISTING ROADWAYS, THE CROSS SLOPE MAY BE TRANSITIONED TO MEET AN EXISTING ROADWAY GRADE. THE CROSS SLOPE TRANSITION SHALL BE APPLIED UNIFORMLY OVER THE FULL LENGTH OF THE RAMP.

THE MAXIMUM RUNNING SLOPE OF 8.3% IS RELATIVE TO A FLAT (0%) REFERENCE. HOWEVER, IT SHALL NOT REQUIRE ANY RAMP OR SERIES OF RAMPS TO EXCEED 15 FEET IN LENGTH NOT INCLUDING LANDINGS OR TRANSITIONS.

DRAINAGE STRUCTURES SHOULD NOT BE PLACED IN LINE WITH RAMPS. THE LOCATION OF THE RAMP SHOULD TAKE PRECEDENCE OVER THE LOCATION OF THE DRAINAGE STRUCTURE. WHERE EXISTING DRAINAGE STRUCTURES ARE LOCATED IN THE RAMP PATH OF TRAVEL, USE A MANUFACTURER'S ADA COMPLIANT GRATE. OPENINGS SHALL NOT BE GREATER THAN 1/2". ELONGATED OPENINGS SHALL BE PLACED SO THAT THE LONG DIMENSION IS PERPENDICULAR TO THE DOMINANT DIRECTION OF TRAVEL.

THE TOP OF THE JOINT FILLER FOR ALL RAMP TYPES SHALL BE FLUSH WITH THE ADJACENT CONCRETE.

CROSSWALK AND STOP LINE MARKINGS, IF USED, SHALL BE SO LOCATED AS TO STOP TRAFFIC SHORT OF RAMP CROSSINGS. SPECIFIC DETAILS FOR MARKING APPLICATIONS ARE GIVEN IN THE "MICHIGAN MANUAL ON UNIFORM TRAFFIC CONTROL DEVICES".

FLARED SIDES WITH A SLOPE OF 10% MAXIMUM, MEASURED ALONG THE ROADSIDE CURB LINE, SHALL BE PROVIDED WHERE AN UNOBSTRUCTED CIRCULATION PATH LATERALLY CROSSES THE SIDEWALK RAMP. FLARED SIDES ARE NOT REQUIRED WHERE THE RAMP IS BORDERED BY LANDSCAPING, UNPAVED SURFACE OR PERMANENT FIXED OBJECTS, WHERE THEY ARE NOT REQUIRED. FLARED SIDES CAN BE CONSIDERED IN ORDER TO AVOID SHARP CURB RETURNS AT RAMP OPENINGS.

DETECTABLE WARNING PLATES MUST BE INSTALLED USING FABRICATED OR FIELD CUT UNITS CAST AND/OR ANCHORED IN THE PAVEMENT TO RESIST SHIFTING OR HEAVING.

MICHIGAN DEPARTMENT OF TRANSPORTATION
BUREAU OF DEVELOPMENT STANDARD PLAN FOR

SIDEWALK RAMP AND DETECTABLE WARNING DETAILS

F.H.W.A. APPROVAL	12-11-2017 PLAN DATE	R-28-J	SHEET 7 OF 7

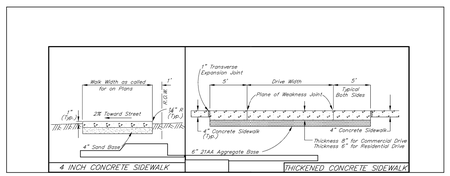

N/A

S:\jobs\1995\9525\DWG\PLAN SETS\CONSTRUCTION\SIDEWALK.dwg
8/29/2019