UNIVERSITY OF MICHIGAN LAUNDRY DEPOT

727 W ELLSWORTH RD
PITTSFIELD CHARTER TOWNSHIP
WASHTENAW COUNTY, MICHIGAN
PARCELS: L -12-17-105-016; L -12-17-105-017
L -12-17-105-018; L -12-17-105-019

CLIENT: OXFORD DESIGN-BUILD LLC
777 E. Eisenhower Pkwy Suite 850
Ann Arbor, MI 48108

ENGINEER: OHM ADVISORS, INC.
TAVIO PALAZZOLO, P.E.
34000 Plymouth Road
Livonia, MI 48150
(734)466-4406
Tavio.Palazzolo@ohm-advisors.com

SURVEYOR: OHM ADVISORS, INC.
ANDY SCHRIPSEMA, P.S.
34000 Plymouth Road
Livonia, MI 48150
(734)466-4514

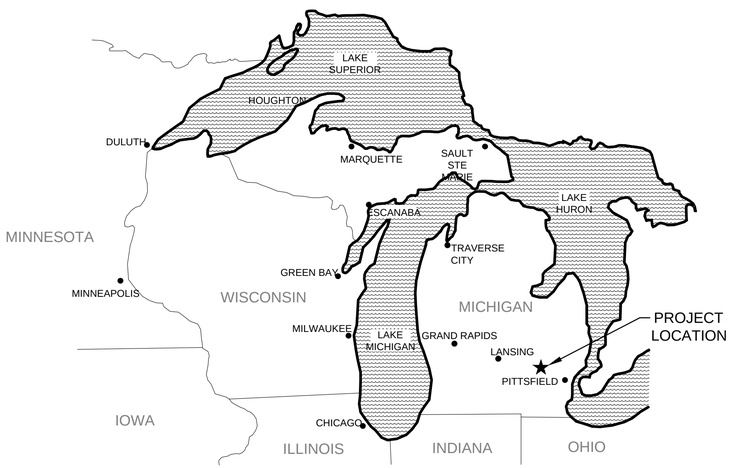

AREA LOCATION MAP
NOT TO SCALE

VICINITY MAP
NOT TO SCALE

NORTH

LEGAL DESCRIPTION:

UNITS 16-19 OF "OXFORD COMMERCE PARK", LOCATED IN THE NE 1/4 OF SECTION 17, T.3S., R.6E., PITTSFIELD TOWNSHIP, WASHTENAW COUNTY, MICHIGAN, AS RECORDED IN LIBER 4475, PAGE 514, W.C.R.

OHM
34000 Plymouth Road
Livonia, MI 48150
P (734) 522-6711 | F (734) 522-6427
ARCHITECTS ENGINEERS PLANNERS OHM-ADVISORS.COM

UTILITY PROVIDERS

WATER & SANITARY
PITTSFIELD CHARTER TOWNSHIP
6201 WEST MICHIGAN AVE
ANN ARBOR, MI 48108
734-822-2110
CONTACT:B.WEIRICH/C.LYON
UTILITIES@PITTSFIELD-MI.GOV

NATURAL GAS
DTE GAS DISTRIBUTION
ONE ENERGY PLAZA
DETROIT, MI 48226
313.235.5111
ATTN: BARBARA SAUNDERS
SAUNDERSB@DTEENERGY.COM

ELECTRICITY
DETROIT EDISON
1 ENERGY PLAZA, 518 SB
DETROIT, MI 48226
313-235-5632
CONTACT:
Design_MissDig@dteenergy.com

TELEPHONE
AT&T
54 N. MILL ST, 4TH FLOOR
PONTIAC, MI 48342
248.456.8256
CONTACT: LINDA DENNISUK
ld2154@att.com

CABLE
COMCAST CABLE COMMUNICATIONS
25626 TELEGRAPH
SOUTHFIELD, MI 48033
248.809.2715
CONTACT: CRAIG PUDAS
CRAIG_PUDAS@CABLE.COMCAST.COM

I Certify That The Civil Plans Were
Prepared Under My Direct Supervision

SHEET INDEX

REVISION KEY
● NEW SHEET ○ NOT REVISED ▲ REVISED

SHEET	SHEET TITLE	DATE / DESCRIPTION: 01/17/2020 ADMINISTRATIVE REVIEW	01/31/2020 BID SET	02/14/2020 RESUBMITTED TO TOWNSHIP				
C-001	COVER SHEET	●	▲	▲				
C-010	CIVIL NOTES		●	○				
C-011	CIVIL NOTES		●	○				
C-012	CIVIL NOTES		●	○				
C-013	CIVIL NOTES		●	○				
C-110	EXISTING CONDITIONS AND DEMOLITION PLAN	●	▲	▲				
C-111	SESC PLAN	●	▲	▲				
C-120	SITE LAYOUT PLAN	●	▲	○				
C-121	SITE LAYOUT - BID ALTERNATE	●	▲	○				
C-160	GRADING AND STORM WATER PLAN	●	▲	▲				
C-501	CIVIL DETAILS	●	▲	▲				
C-502	CIVIL DETAILS - RETAINING WALL DETAIL		●	▲				
C-503	CIVIL DETAILS - RETAINING WALL DETAIL			●				
C-504	PITTSFIELD TOWNSHIP STORM SEWER DETAILS	●	○	○				
C-505	PITTSFIELD TWSP-SOIL EROSION DETAILS AND NOTES	●	○	○				

DRAWING PATH: P:\0201_9600\0561190060_UM_Laundry_Depot_AA_Airport\Drawings\Civil\Plans_Const\190020CCOV.dwg Feb 13, 2020 - 11:15am

AUTHORITIES/PERMITTING

1. THE CONTRACT DOCUMENTS, WHICH INCLUDE BUT ARE NOT LIMITED TO THE PLAN NOTES, SPECIFICATIONS, CONTRACT TERMS AND CONDITIONS, AND SUPPLEMENTAL CONDITIONS, LIST VARIOUS FIRMS AND AGENCIES HAVING VARYING LEVELS OF AUTHORITY OVER THE WORK. THE FOLLOWING ASSOCIATIONS OF AUTHORITY SHALL BE CONSIDERED PART OF THE CONTRACT AND SHALL BE HONORED BY THE CONTRACTOR UNLESS ALTERED IN WRITING BY THE OWNER.

   A. CONTRACTOR = TO BE DETERMINED (REQUIREMENTS OF CONTRACTOR SHALL EQUALLY APPLY TO ANY VENDOR, SUBCONTRACTOR, OR SERVICE PROVIDER RETAINED BY THE CONTRACTOR)

   B. SURVEYOR = SHALL BE RETAINED BY THE CONTRACTOR FOR STAKING, MEASUREMENT, AND AS-BUILT RECORD AT NO ADDITIONAL EXPENSE TO THE OWNER.

   C. OWNER = OXFORD DESIGN-BUILD LLC (CONTACT: JOE MORCHÉ – (734) 548-6564)

   D. OWNER'S REPRESENTATIVE = ANY DELEGATE FROM ENGINEER, OWNER, OR TESTING AGENCY. OWNER MAY DESIGNATE OR CHANGE SPECIFIC REPRESENTATIVES FOR EACH PROJECT REQUIREMENT AT ANY TIME.

   E. ENGINEER = OHM ADVISORS (CONTACT: GREG MARKER - (734) 368-5240)

   F. TESTING AGENCY = DESIGNATED AND RETAINED BY THE ENGINEER

   G. UTILITY AUTHORITIES = SEE COVER SHEET

   H. RIGHT-OF-WAY = NOT APPLICABLE - CONTRACTOR SHALL PERFORM ALL WORK AND STAGING WITHIN PROPERTY LIMITS OF OXFORD COMMERCE PARK

   I. CONSTRUCTION/BUILDING PERMITTING = PITTSFIELD CHARTER TOWNSHIP

   J. TRAFFIC CONTROL REGULATION = MICHIGAN MANUAL FOR UNIFORM TRAFFIC CONTROL DEVICES (MMUTCD)

2. PRIOR TO CONSTRUCTION, THE CONTRACTOR SHALL OBTAIN THE NECESSARY FEDERAL, STATE, AND LOCAL PERMITS FOR THE PROPOSED WORK AT NO ADDITIONAL COST TO THE OWNER.

GENERAL CONSTRUCTION NOTES/TRAFFIC CONTROL

1. CONTRACTOR SHALL PROVIDE ALL MATERIALS, PERSONNEL, AND EQUIPMENT NECESSARY TO COMPLY WITH ALL NOTES AND REQUIREMENTS CONTAINED WITHIN THE CONTRACT DOCUMENTS, INCLUDING THE PLAN DRAWING AND DETAILS, AT NO ADDITIONAL COST TO THE OWNER. COMPLIANCE WITH THE PROJECT REQUIREMENTS CONTAINED HEREIN SHALL BE CONSIDERED INCIDENTAL TO THE CONTRACT AND THE RESPECTIVE LUMP SUM OR UNIT PRICE COST(S).

2. CONTRACTOR SHALL FIELD VERIFY LOCATION AND ELEVATION OF BURIED UTILITIES AND TOPOGRAPHIC FEATURES PRIOR TO CONSTRUCTION. CONTRACTOR SHALL NOTIFY OWNER'S REPRESENTATIVE OF ANY DISCREPANCIES ON THE PLANS ON THE SAME DAY THEY ARE DISCOVERED.

3. DO NOT SCALE DRAWINGS. ANY DIMENSIONAL INFORMATION REQUIRED WHICH IS NOT INDICATED ON DRAWING DIMENSION STRINGS SHALL BE OBTAINED FROM THE ENGINEER.

4. MATERIALS, METHODOLOGIES, PROCEDURES THAT REFER TO "MDOT" SHALL CONFORM TO MICHIGAN DEPARTMENT OF TRANSPORTATION 2012 STANDARD SPECIFICATIONS FOR CONSTRUCTION AND APPLICABLE SPECIAL PROVISIONS. REFERENCES TO PAYMENT WITHIN THE REFERENCED MDOT DOCUMENTS SHALL NOT APPLY TO THIS CONTRACT; ALL PAYMENT SHALL BE IN ACCORDANCE WITH THE METHOD OF PAYMENT AS DESCRIBED IN THE CONTRACT DOCUMENTS AND/OR OWNER'S PURCHASE ORDER LANGUAGE.

5. CONTRACTOR SHALL NOTIFY THE OWNER'S REPRESENTATIVE A MINIMUM OF 48 HOURS PRIOR TO PERFORMING ACTIVITIES THAT WILL OR MAY REQUIRE ACCEPTANCE, INSPECTION, OR ANY TESTING DESCRIBED HEREIN.

6. THE CONTRACTOR SHALL RESTRICT CONSTRUCTION ACTIVITIES TO THE SITE BOUNDARIES. THE CONTRACTOR SHALL REPAIR ANY DAMAGE OR DISTURBANCE TO THE ADJACENT PROPERTIES OR RIGHT-OF-WAY OCCURRING DURING THIS CONTRACT, AT NO COST TO THE OWNER.

7. THE CONTRACTOR SHALL BE RESPONSIBLE FOR PROVIDING AND MAINTAINING TRAFFIC CONTROL DEVICES SUCH AS CONES, BARRICADES, SIGNS, FLAGGERS, FENCES, AND LIGHTS TO CONTROL THE MOVEMENT OF TRAFFIC WHERE NECESSARY CONFORMING TO LOCAL TRAFFIC CONTROL STANDARDS. TRAFFIC AND PEDESTRIAN CONTROLS SHALL PROHIBIT TRAFFIC OVER NEW PAVEMENT, LANDSCAPING, RESTORATION, PAINT, OR ANY OTHER NEWLY INSTALLED FEATURE UNTIL THE OWNER'S REPRESENTATIVE AUTHORIZES OPENING TO TRAFFIC.

8. THE CONTRACTOR SHALL PREPARE AND SUBMIT A TRAFFIC CONTROL PLAN FOR ANY WORK ADJACENT TO OR WITHIN THE PUBLIC RIGHT-OF-WAY.

9. CONTRACTOR SHALL MAINTAIN AN ACCESSIBLE ROUTE FOR PEDESTRIANS AND EMERGENCY VEHICLES AND PERSONNEL TO ADJACENT BUILDINGS AT ALL TIMES.

10. SAFETY NOTICE: CONTRACTOR WILL BE SOLELY AND COMPLETELY RESPONSIBLE FOR CONDITIONS ON THE JOB SITE, INCLUDING SAFETY OF ALL PERSONS AND PROPERTY DURING PERFORMANCE OF THE WORK; THIS REQUIREMENT WILL APPLY CONTINUOUSLY AND NOT BE LIMITED TO NORMAL WORKING HOURS. ON-SITE REVIEW OF THE CONTRACTOR'S PERFORMANCE DOES NOT ALLEVIATE THE CONTRACTOR'S SAFETY REQUIREMENTS. SITE SECURITY IS THE CONTRACTOR'S RESPONSIBILITY.

11. EQUIPMENT, SOIL STOCKPILES, JOB TRAILERS, VEHICLES, AND OTHER MATERIALS SHALL ONLY BE STORED IN AN OWNER-APPROVED AREA THAT PREVENTS ENVIRONMENTAL DAMAGE, IS DEVOID OF MATURE TREES, AND IS ISOLATED FROM DRAINAGE FACILITIES, WETLANDS, STREAMS, AND TRAFFIC PATTERNS.

12. CONTRACTOR SHALL UNLOAD MATERIAL IN A SAFE AND CAREFUL MANNER WHICH PREVENTS DAMAGE TO THE MATERIAL AND EXISTING SITE FEATURES. DROPPING PIPE, STRUCTURES, FITTINGS, CASTINGS, OR OTHER BRITTLE OR FRAGILE MATERIAL OFF OF TRUCKS IS PROHIBITED.

13. TREE PROTECTION: UNLESS OTHERWISE DIRECTED, ALL TREES SHALL BE PROTECTED. THE FOLLOWING MEASURES SHALL BE IMPLEMENTED FOR TREE PROTECTION

   A. THE TREES SHALL BE PROTECTED FROM WOUNDS TO THE BARK AND FOLIAGE.

   B. THE CRITICAL ROOT ZONE (1.5 FEET RADIUS FOR EACH INCH OF DIAMETER AT BREAST HEIGHT) SHALL BE PROTECTED FROM COMPACTION AND GRADING.

   C. CHANGES IN TEMPORARY SITE DRAINAGE AND PONDING THAT AFFECT THE PROTECTED TREES IS PROHIBITED.

   D. THE CRITICAL ROOT ZONE SHALL BE SURROUNDED BY A HIGH-VISIBILITY FENCE (4 FT IN HEIGHT).

   E. ANY EXISTING TREE THAT IS DAMAGED BY THE CONTRACTOR'S OPERATIONS SHALL BE REPLACED AT THE EXPENSE OF THE CONTRACTOR. TREE WILL BE CONSIDERED DAMAGED IF THE CRITICAL ROOT ZONE IN COHESIVE SOILS IS COMPACTED OR IF THERE ARE SIGNIFICANT WOUNDS THAT COULD CONTRIBUTE TO ROT OR DISTRESS.

14. ALL DEMOLITION AND CONSTRUCTION ACTIVITIES SHALL BE RESTRICTED TO NORMAL DAYLIGHT WORKING HOURS MONDAY THROUGH SATURDAY UNLESS OTHERWISE APPROVED BY THE OWNER'S REPRESENTATIVE.

DEMOLITION AND CLEARING

1. SOIL EROSION AND SEDIMENTATION CONTROL MEASURES SHALL BE IN PLACE PRIOR TO BEGINNING DEMOLITION WORK.

2. TOPSOIL STRIPPING

   A. STRIP THE FULL DEPTH OF TOPSOIL ONLY FROM THOSE AREAS THAT WILL BE DISTURBED BY EXCAVATION, FILLING, CONSTRUCTION, OR COMPACTION BY EQUIPMENT.

   B. STOCKPILE TOPSOIL WITHOUT INTERMIXING WITH ANY OTHER MATERIAL - BORROW TOPSOIL TO REPLACE MATERIAL CONTAMINATED BY THE CONTRACTOR SHALL BE AT THE CONTRACTOR'S EXPENSE.

   C. TEMPORARY STABILIZATION OF THE STOCKPILE(S) SHALL BE COMPLETED WITHIN SEVEN (7) DAYS OF THE FORMATION OF THE STOCKPILE, IF IT IS TO REMAIN DORMANT (UNDISTURBED) FOR LONGER THAN THIRTY (30) DAYS.

3. TEMPORARY STOCKPILES: PROTECTIVE MEASURES SHALL BE INCORPORATED BY THE CONTRACTOR TO ENSURE SAFETY AND CONTROL EROSION ASSOCIATED WITH THE TEMPORARY STOCKPILES.

4. EXCAVATED MATERIALS NOT NEEDED OR NOT SUITABLE FOR FILL SHALL BE DISPOSED OFFSITE.

5. DISPOSAL: ALL DEMOLITION AND REMOVED MATERIAL BECOMES THE PROPERTY OF THE CONTRACTOR AND SHALL BE DISPOSED OFF-SITE IN ACCORDANCE TO ALL FEDERAL, STATE, AND LOCAL HAULING AND DISPOSAL REGULATIONS UNLESS DIRECTED OTHERWISE BY THE OWNER. DISPOSAL IN WETLANDS AND FLOODPLAINS IS PROHIBITED. BURNING ON-SITE IS PROHIBITED.

SOILS EROSION, SEDIMENTATION CONTROL (SESC) AND STORMWATER POLLUTION PREVENTION (SWPP)

1. LOCAL REGULATOR - PITTSFIELD CHARTER TOWNSHIP, DEPARTMENT OF UTILITIES & MUNICIPAL SERVICES – (734) 822-3130.

2. SOIL EROSION AND SEDIMENTATION CONTROL SEQUENCE

   A. NO DEMOLITION, CUTTING, GRADING, EXCAVATION, OR CONSTRUCTION SHALL BE PERFORMED PRIOR TO FULL IMPLEMENTATION OF CONTROL MEASURES.

   B. DESIGN, CONSTRUCT, AND COMPLETE THE EARTH CHANGE IN A MANNER THAT LIMITS THE EXPOSED AREA OF DISTURBED LAND FOR THE SHORTEST PERIOD OF TIME.

   C. REMOVE SEDIMENT CAUSED BY ACCELERATED SOIL EROSION FROM RUNOFF WATER BEFORE IT LEAVES THE SITE OF THE EARTH CHANGE.

   D. TEMPORARY OR PERMANENT CONTROL MEASURES SHALL BE INSTALLED TO CONVEY WATER AROUND, THROUGH OR FROM THE EARTH CHANGE AT A NON-EROSIVE VELOCITY.

   E. INSTALL TEMPORARY SOIL AND SEDIMENTATION CONTROL MEASURES BEFORE OR UPON COMMENCEMENT OF THE EARTH CHANGE ACTIVITY AND MAINTAIN THE MEASURES ON A DAILY BASIS. REMOVE TEMPORARY SOIL EROSION AND SEDIMENTATION CONTROL MEASURES AFTER PERMANENT SOIL EROSION MEASURES ARE IN PLACE AND THE AREA IS STABILIZED. (STABILIZED MEANS THE ESTABLISHMENT OF VEGETATION OR THE PROPER PLACEMENT, GRADING OR COVERING OF SOIL TO ENSURE RESISTANCE TO SOIL EROSION, SLIDING OR OTHER EARTH MOVEMENT.)

   F. COMPLETE PERMANENT SOIL EROSION CONTROL MEASURES FOR THE EARTH CHANGE WITHIN FIVE (5) CALENDAR DAYS AFTER FINAL GRADING OR UPON COMPLETION OF FINAL EARTH CHANGE. IF IT IS NOT POSSIBLE TO PERMANENTLY STABILIZE THE EARTH CHANGE, THEN MAINTAIN TEMPORARY SOIL EROSION AND SEDIMENTATION CONTROL MEASURES UNTIL PERMANENT SOIL EROSION CONTROL MEASURES ARE IN PLACE AND STABILIZED.

   G. REMOVE AND DISPOSE OF ALL TEMPORARY CONTROL MEASURES AFTER RESTORATION IS COMPLETE.

3. SOIL EROSION AND SEDIMENTATION CONTROL MAINTENANCE NOTES

   A. INSTALL TEMPORARY INLET FILTERS AT ALL ADJACENT AND DOWN-GRADIENT STORM WATER INLETS, CATCH BASINS AND MANHOLES THAT MAY BE IMPACTED. CATCH BASIN INLET FILTERS SHALL BE MAINTAINED CLEAN AT ALL TIMES THROUGHOUT THE CONSTRUCTION PERIOD. IF A FILTER HAS HOLES OR IS INUNDATED WITH SEDIMENT, THE FILTER SHALL BE REPLACED BY THE CONTRACTOR.

   B. SILT FENCE SHALL BE MAINTAINED AT ALL TIMES THROUGHOUT THE CONSTRUCTION PERIOD. IF REPAIR OR REPLACEMENT IS NECESSARY, IT SHALL BE PERFORMED ACCORDING TO THE MANUFACTURER'S SPECIFICATIONS. MAINTENANCE INCLUDES THE REMOVING OF BUILT-UP SEDIMENT ACCUMULATES TO ½ THE HEIGHT OF THE FENCE. CONTRACTOR SHALL REMOVE, REPLACE, RETRENCH, OR RE-BACKFILL THE FENCE IF IT FAILS. ADDITIONALLY, THE CONTRACTOR SHALL REINSTALL ANY PORTION OF THE FENCING DAMAGED BY CONSTRUCTION MACHINERY.

   C. PLACE STOCKPILES AND OTHER SPOIL PILES AWAY FROM THE DRAINAGE SYSTEM TO MINIMIZE SEDIMENT TRANSPORT. IF THE STOCKPILE AND/OR SPOIL PILE MUST REMAIN ON-SITE OVERNIGHT, OR IF THE WEATHER CONDITIONS INDICATE THE CHANCE FOR PRECIPITATION, A) COVER THE PILE WITH WATER REPELLENT MATERIAL TO PREVENT EROSION AND/OR B) INSTALL SILT FENCING AROUND THE BASE OF THE PILE TO PREVENT TRANSPORT OF SEDIMENT TO THE STORM WATER SYSTEM, OR APPLY OTHER CONTROL METHODS APPROPRIATE TO THE SITE. CONTROL MEASURES TO GUARD AGAINST WIND EROSION MUST ALSO BE EMPLOYED, SUCH AS WETTING OR COVERING THE STOCKPILES. KEEP AS FEW STOCKPILES AS POSSIBLE DURING THE COURSE OF THE PROJECT.

   D. DITCHES AND SWALES SHALL HAVE CHECK DAMS INSTALLED AT REGULAR INTERVALS; CULVERT INLETS AND/OR SPILLWAYS SHALL BE PROTECTED WITH STONE BERMS OR STRAW BALES.

   E. THROUGHOUT THE CONSTRUCTION PERIOD, ALL MUD/SILT TRACKED ONTO EXISTING ROADS FROM THE SITE DUE TO CONSTRUCTION SHALL BE IMMEDIATELY REMOVED BY THE CONTRACTOR.

   F. SEEDING OR OTHER STABILIZATION SHALL BE REQUIRED IMMEDIATELY TO AREAS DAMAGED BY RUNOFF.

   G. DUST CONTROL: PREVENT THE SPREAD OF DUST AND DEBRIS AND AVOID THE CREATION OF A NUISANCE IN THE SURROUNDING AREA. WATER SHALL BE THE ONLY APPROVED DUST CONTROL SUBSTANCE. DO NOT USE WATER IF IT RESULTS IN HAZARDOUS OR OBJECTIONABLE CONDITIONS SUCH AS, BUT NOT LIMITED TO, ICE, FLOODING, OR POLLUTION.

   H. INSPECTIONS BY THE OWNER OR A REGULATOR MAY OCCUR AND RESULT IN DIRECTION FOR MAINTENANCE OR EXPANSION OF INSTALLED MEASURES; CONTRACTOR SHALL COMPLY AT NO ADDITIONAL COST.

4. POLLUTION PREVENTION NOTES

   A. DURING WORK ACTIVITIES IF SUSPECT CONTAMINATED SOIL, GROUNDWATER, OR OTHER UNKNOWN MATERIAL IS ENCOUNTERED CONTACT THE OWNER'S REPRESENTATIVE IMMEDIATELY. SUSPECT CONTAMINATED SOIL MAY EXHIBIT CHEMICAL OR UNUSUAL ODORS, STAINING, UNUSUAL COLORING, AND/OR CONTAIN MAN-MADE DEBRIS. SUSPECT CONTAMINATED GROUNDWATER MAY EXHIBIT CHEMICAL OR UNUSUAL ODORS, UNUSUAL COLORING, AND/OR SHEEN. IMMEDIATELY CEASE ALL EXCAVATION, DEWATERING, TRANSPORT, OR DISTURBANCE OF THE SUSPECT MATERIAL UNTIL GIVEN DIRECTION BY THE OWNER'S REPRESENTATIVE.

   B. DISCHARGING POLLUTANTS SUCH AS CHEMICALS, FUELS, LUBRICANTS, BITUMINOUS MATERIALS, RAW SEWAGE, AND OTHER HARMFUL WASTE INTO OR ALONGSIDE OF RIVERS, STREAMS, IMPOUNDMENTS OR INTO NATURAL OR MAN-MADE CHANNELS LEADING THERETO IS STRICTLY PROHIBITED. ANY SPILLS OR DISCHARGES AS DESCRIBED ABOVE SHALL BE REPORTED TO THE OWNER'S REPRESENTATIVE IMMEDIATELY.

   C. CONTRACTOR SHALL NOT DISCHARGE TO THE SURFACE WATERS OF THE STATE ANY WASTEWATER GENERATED FROM CUTTING, GRINDING, DRILLING, OR HYDRODEMOLITION OF CONCRETE, INCLUDING ASPHALT WITHOUT AUTHORIZATION FROM THE OWNER.

   D. THE FOLLOWING REQUIREMENTS APPLY:

      i. STORM DRAINS MUST BE PROTECTED FROM DUST AND DEBRIS.

      ii. ANY WATER USED DURING CONCRETE AND ASPHALT WORK (INCLUDING SWEEPING AND SAW-CUTTING) MUST BE CONTAINED AND COLLECTED FOR PROPER DISPOSAL. SUGGESTED CONTROLS INCLUDE WET VACUUM, OR ABSORBENTS.

      iii. GOOD HOUSEKEEPING PRACTICES MUST BE EMPLOYED AT THE JOBSITE. MINIMIZE DUST.

5. CONCRETE AND GROUT WASHOUT

   A. DO NOT DISCHARGE CONCRETE/GROUT WASHOUT INTO STORM DRAINS, CATCH BASINS OR TO THE SANITARY SEWER SYSTEM. PERFORM WASHING OF CONCRETE TRUCKS IN DESIGNATED AREAS OR AN APPROVED OFFSITE LOCATION.

   B. DESIGNATED AREAS SHOULD BE CLEARLY LABELED. THEY SHOULD BE IN A PIT TO PREVENT RUN-OFF OF WASTE WATER. PLACE DESIGNATED AREAS A MINIMUM OF 50 FEET FROM STORM DRAINS, BODIES OF WATER AND DITCHES. ALL DESIGNATED AREAS SHOULD BE LINED TO PREVENT SEEPAGE AND SHOULD HAVE A BARRIER.

   C. ALTERNATIVE TO A DESIGNATED AREA: PROVIDE A CONCRETE BOX. IF ONLY A SMALL OF CONCRETE WASHINGS IS TO OCCUR, ONE OPTION IS TO LINE A ROLL-OFF BOX. FOR VERY SMALL PROJECTS THIS COULD BE DONE WITH A DRUM.

   D. ONCE CONCRETE WASHOUT HAS HARDENED, BREAK UP AND DISPOSE OF PROPERLY. DISPOSAL OF HARDENED CONCRETE/GROUT SHOULD OCCUR ON A REGULAR BASIS.

   E. WASHOUT FACILITIES MUST BE CLEANED, OR NEW FACILITIES PROVIDED ONCE THE WASHOUT AREA IS 75% FULL.

6. DEWATERING: UNCONTAMINATED GROUNDWATER AND SURFACE WATER WHICH IS FREE OF SEDIMENT MAY BE DISCHARGED TO A STORM DRAIN. ALL DEWATERING OPERATIONS MUST USE A FILTER (DEWATERING) BAG CONNECTED TO THE END OF THE DISCHARGE PIPE. THE FINAL DISCHARGE MUST BE CLEAR (NO TURBIDITY) AND ON A CLEAN SURFACE (NOT ON EXPOSED SOILS) TO PREVENT THE DISCHARGE FROM PICKING UP SEDIMENT. THE STORM DRAIN INLET SHALL BE PROTECTED WITH AN INLET FILTER. THE CONTRACTOR SHALL ENSURE ROUTINE INSPECTION AND MAINTENANCE OF THE PUMP HOSES & FILTER BAGS DAILY, REPLACE EQUIPMENT WHEN SIGNS OF DETERIORATION ARE EVIDENT AND/OR IF INSTRUCTED BY THE CONSTRUCTION SITE STORM OPERATOR OR OWNER'S REPRESENTATIVE. IF THERE ARE INDICATIONS OF POSSIBLE CONTAMINATION, OR IF THE WATER IS TURBID, IMMEDIATELY CEASE DISCHARGE.

EARTHWORK

1. WHEN EXCAVATED MATERIALS ARE INSUFFICIENT OR UNSUITABLE FOR USE AS FILL OR BACKFILL, BORROW MATERIAL SHALL BE IMPORTED BY THE CONTRACTOR. CONTRACTOR SHALL CALCULATE CUT AND FILL QUANTITIES AND SHALL IMPORT AND EXPORT MATERIALS AS NEEDED TO COMPLY WITH THE PROJECT PLANS, DETAILS, AND SPECIFICATIONS AT NO ADDITIONAL COST TO THE OWNER.

2. THE SUBGRADE OR FILL SHALL BE PROOF-ROLLED PRIOR TO PLACING AGGREGATE BASE COURSE OR SUBBASE ATOP SUCH MATERIALS. AGGREGATE BASE COURSE LEFT IN PLACE SHALL BE PROOF ROLLED PRIOR TO PLACING PAVEMENT. ANY SOIL STRATA IS SUBJECT TO PROOF ROLL AT THE DISCRETION AND DIRECTION OF THE OWNER'S REPRESENTATIVE.

OHM
ARCHITECTS ENGINEERS PLANNERS
34000 Plymouth Road
Livonia, MI 48150
P (734) 522-6711 | F (734) 522-6427
OHM-ADVISORS.COM

ISSUE: BID SET - NOT FOR CONSTRUCTION
REVISIONS:
02/14/2020 RESUBMITTED TO TOWNSHIP
--- ---
--- ---
--- ---
--- ---

DATE	PROJ NUMBER	ENGARCH	PROJ MGR	CADD	COUNTY	MUNICIPALITY
02/14/2020	0561-19-0060	OP	GM	AGG	WASHTENAW	PITTSFIELD CHARTER TWSP

OXFORD DESIGN-BUILD LLC
UNIVERSITY OF MICHIGAN LAUNDRY DEPOT
CIVIL NOTES

SHEET C-010

COPYRIGHT 2019 OHM ALL DRAWINGS AND WRITTEN MATERIALS APPEARING HEREIN CONSTITUTE THE ORIGINAL AND UNPUBLISHED WORK OF OHM AND THE SAME MAY NOT BE DUPLICATED, DISTRIBUTED, OR DISCLOSED WITHOUT PRIOR WRITTEN CONSENT OF OHM

DRAWING PATH: P:\0201_0600\0561\90060_UM_Laundry_Depot_AA_Airport\Drawings\Civil\Plans_Const\190020NOT.dwg Feb 13, 2020 - 11:15am

3. BORROW SOIL: PRODUCT DATA, GRADATION, AND CERTIFICATION SHALL BE SUBMITTED BY THE CONTRACTOR FOR APPROVAL BY THE OWNER'S REPRESENTATIVE PRIOR TO PLACEMENT.

4. PRIOR TO PLACING ANY SOIL MATERIAL OR PAVEMENTS, THE UNDERLYING COURSE OR SUBGRADE SHALL BE CLEANED OF ALL FOREIGN SUBSTANCES, ALL FROZEN MATERIALS REMOVED, AND THE SURFACE SHALL MEET COMPACTION AND SURFACE TOLERANCES.

5. RUTS OR SOFT YIELDING SPOTS IN THE UNDERLYING COURSES, AREAS HAVING INADEQUATE COMPACTION, AND DEVIATIONS OF THE SURFACE FROM THE REQUIREMENTS SHALL BE CORRECTED BY "SUBGRADE UNDERCUT"

6. DRIED OR CRUSTED COHESIVE SOILS SHALL BE PLOWED, DISKED OR OTHERWISE BROKEN UP BEFORE COMPACTION. IF WATER IS ADDED TO FILLS, THE LAYER SHALL BE SPREAD IN EVEN LIFTS, MOISTENED AS NECESSARY, THOROUGHLY MIXED, AND COMPACTED.

7. SUBGRADE UNDERCUT:

   A. UNDERCUT AND REMOVE UNSATISFACTORY SOILS TO DEPTH AND HORIZONTAL EXTENTS AS DIRECTED BY THE OWNER'S REPRESENTATIVE.

   B. REPLACE THE REMOVED MATERIAL WITH FILL, GRADE AND COMPACT TO THE PLAN-INDICATED SUBGRADE ELEVATIONS IN ACCORDANCE WITH THE BACKFILL REQUIREMENTS OF THE PLAN

   C. CONTRACTOR SHALL UNDERLAY FILL MATERIAL WITH A STABILIZATION GEOGRID AS DIRECTED BY THE PLANS OR OWNER'S REPRESENTATIVE

   D. ALL SUBGRADE UNDERCUTS ARE SUBJECT TO ACCEPTANCE BY THE OWNER'S REPRESENTATIVE.

8. PROOF ROLLING:

   A. PROOF ROLL THE AREAS INDICATED, IN ADDITION TO THE COMPACTION SPECIFIED AND SHALL CONSIST OF THE APPLICATION OF COVERAGES WITH A HEAVY PNEUMATIC-TIRED ROLLER HAVING FOUR OR MORE TIRES, EACH LOADED TO A MINIMUM OF 30,000 POUNDS AND INFLATED TO A MINIMUM OF 125 PSI.

   B. MAINTAIN WATER CONTENT OF THE UNDERLYING MATERIAL AND BASE COURSE AT OPTIMUM OR AT THE PERCENTAGE DIRECTED FROM START OF COMPACTION TO COMPLETION OF PROOF ROLLING OF THAT LAYER.

   C. ANY BASE COURSE MATERIALS OR ANY UNDERLYING MATERIALS THAT PRODUCE UNSATISFACTORY RESULTS BY PROOF ROLLING SHALL BE REMOVED AND REPLACED WITH SATISFACTORY MATERIALS, RECOMPACTED AND PROOF ROLLED TO THE ACCEPTANCE OF THE OWNER'S REPRESENTATIVE.

9. PLACEMENT OF SUBSEQUENT LAYERS OF SOIL MATERIAL SHALL NOT BE PERFORMED UNTIL THE UNDERLYING MATERIAL HAS BEEN VERIFIED AND ACCEPTED BY THE TESTING AGENCY TO HAVE MET THE CONDITION, GRADATION, WATER CONTENT, AND COMPACTION AS REQUIRED BY THE DESIGN.

10. PROOF ROLLING, DEWATERING, AND SAFETY MEASURES SHALL BE CONSIDERED INCIDENTAL TO THE CONTRACT AND SHALL BE PERFORMED AT NO ADDITIONAL COST TO THE OWNER.

COMPACTION/SOIL TESTING

1. FILL AND BACKFILL MATERIALS SHALL BE PLACED UNIFORMLY ON AN ACCEPTABLE SOIL SURFACE AND COMPACTED IN 8-INCH LIFTS UNLESS THAT CONTRACTOR CAN DEMONSTRATE TO THE OWNER'S REPRESENTATIVE THAT ACCEPTABLE COMPACTION CAN BE ACHIEVED IN THICKER LIFTS.

2. COMPACTION EQUIPMENT:

   A. SHEEPSFOOT ROLLER FOR COHESIVE MATERIALS

   B. VIBRATORY FOR GRANULAR MATERIALS (SAND, STONE, AND GRAVEL)

3. WATER CONTENT: PLUS OR MINUS 2% OF THE OPTIMUM (ASTM D 1557).

4. ROLLER: WORK FROM OUTSIDE TO THE CENTER, OVERLAPPING ON SUCCESSIVE TRIPS AT LEAST ONE-HALF THE WIDTH OF THE ROLLER. ALTERNATE TRIPS OF THE ROLLER SHALL BE SLIGHTLY DIFFERENT LENGTHS.

5. SPEED SHALL BE SUCH THAT DISPLACEMENT OF THE AGGREGATE DOES NOT OCCUR. IN ALL PLACES NOT ACCESSIBLE TO THE ROLLERS, THE MIXTURE SHALL BE COMPACTED WITH HAND-OPERATED POWER TAMPERS OR EXCAVATOR MOUNTED VIBRATORY COMPACTOR (I.E. HOE-PACK).

6. COMPACTION SHALL BE MEASURED RELATIVE TO THE MAXIMUM DRY DENSITY PER ASTM D 1557 (MODIFIED PROCTOR METHOD).

7. MINIMUM COMPACTION:

   A. TOPSOIL 85%

   B. GREENSPACE FILL 90%

   C. UNDER PAVEMENT 95%

   D. UTILITY TRENCH BACKFILL 95%

   E. BERMS/POND SLOPES 95%

8. FILL AND BACKFILL WITHIN A 1:1 ENVELOPE OF THE EDGE OF PAVEMENT OR BACK OF CURB SHALL BE TREATED AS "UNDER PAVEMENT"

9. TESTING:

   A. TESTING AGENCY: SEE "AUTHORITIES" - HAS AUTHORITY TO STOP OR REJECT WORK FOR QUALITY ON BEHALF OF THE OWNER

   B. MOISTURE-DENSITY RELATIONSHIP (ASTM D 1557 – MODIFIED PROCTOR): ONE TEST FOR EACH MATERIAL VARIATION AND BORROW SOURCE.

   C. SIEVE ANALYSIS, (ASTM C 136): 1 PER MATERIAL FOR EACH BORROW SOURCE, EACH RECLAIMED ON-SITE MATERIAL, AND FOR EACH VARIATION IN MATERIAL.

   D. IN-PLACE DENSITIES (ASTM D1556 – SAND CONE OR ASTM D6938 – NUCLEAR GAUGE):

      i. GENERAL: 1 PER LOCATION

      ii. UNDER SIDEWALKS: 1 PER 100 SQUARE FEET

      iii. UNDER OTHER PAVEMENT: 1 PER 500 SQUARE FEET

      iv. UTILITY TRENCHES: 1 PER 100 FEET OF PIPE

EXCAVATION, TRENCHING, AND BACKFILL

1. ONE-CALL UTILITY LOCATING: MISSDIG - 811 OR 800-482-7171. CONTRACTOR SHALL CALL AND OPEN AN EXCAVATION TICKET A MINIMUM OF 3 WORKING DAYS PRIOR TO ANY EXCAVATION. WHEN MARKINGS AND FLAGS ARE DISRUPTED OR DESTROYED - CALL FOR REMARKING.

2. SURVEYOR SHALL PROVIDE STAKING FOR GRADING, FILL THICKNESS, CUT AND FILL LIMITS, AND ANY OTHER FIELD CONTROL NEEDED TO COMPLETE THE WORK IN STRICT ACCORDANCE WITH THE CONTRACT DOCUMENTS.

3. EXCAVATED MATERIALS SHALL BE PLACED ON THE UPHILL SIDES OF TRENCHES, WHERE POSSIBLE, AND SHALL BE SET BACK 10 FEET FROM THE TRENCH.

4. CONTAMINATED SOILS ARE NOT ANTICIPATED TO BE ENCOUNTERED. IF CONTAMINATED SOILS ARE EXCAVATED, THEY SHALL BE ISOLATED FROM OTHER MATERIALS, PROTECTED FROM SPREADING CONTAMINANTS INTO STORM SEWERS AND WATERWAYS, AND SHALL BE DISPOSED OF ACCORDING TO LOCAL AND STATE REGULATIONS.

5. SALVAGE EXCAVATED MATERIALS AS NEEDED FOR USE AS FILL OR BACKFILL. SEGREGATE SALVAGED MATERIALS AND PREVENT CONTAMINATION. BORROW SOILS NEEDED TO REPLACE REJECTED MATERIALS SHALL BE AT NO ADDITIONAL COST TO THE OWNER.

6. CONTRACTOR IS RESPONSIBLE FOR MAINTAINING A SAFE EXCAVATION AT ALL TIMES. USE SHORING, TRENCH BOXES, SLOPING, BENCHING, DEWATERING AS NEEDED TO ENSURE THE SAFETY OF WORKERS, INSPECTORS, TESTERS, AND OBSERVERS. UNATTENDED EXCAVATIONS SHALL BE BARRICADED AND/OR FENCED TO PREVENT ACCIDENTS - CONTRACTOR IS RESPONSIBLE FOR PUBLIC SAFETY ANY EXCAVATIONS THEY CREATE.

7. TRENCH BACKFILL:

   A. EXCAVATED BACKFILL: DRY, STABLE, EXCAVATED MATERIAL SHALL ONLY PERMITTED AS BACKFILL UNDER NON-PAVED AREAS, UNLESS THE OWNER'S REPRESENTATIVE DETERMINES IT MEETS THE REQUIREMENTS "GRANULAR BACKFILL."

   B. GRANULAR BACKFILL: SAND OR GRAVEL MEETING THE GRADATION SPECIFIED IN THE PLANS OR AS DETERMINED BY THE ENGINEER.

   C. STONE BEDDING AND INITIAL BEDDING: STONE OR GRANULAR MATERIAL MEETING THE GRADATION SPECIFIED IN THE PLANS

8. PLACE TRENCH BACKFILL AT OPTIMAL DENSITY TO ALLOW FOR MINIMUM COMPACTION. WET OR SLOPPY BACKFILL SHALL NOT BE PERMITTED.

9. TRENCH OR EXCAVATE TO ALLOW FOR PROPER PIPE LINE AND GRADE, UTILITY STRUCTURE INSTALLATION, BRACING AND SHORING (IF NEEDED), AND TO ALLOW FOR THE PROPOSED PAVEMENT OR RESTORATION CROSS-SECTION PER THE PLANS. EXCESS EXCAVATION, NOT DIRECTED BY THE OWNER'S REPRESENTATIVE AND NOT NEEDED TO INSTALL UTILITIES OR SITE IMPROVEMENTS SHALL BE BACKFILLED WITH COMPACTED GRANULAR MATERIALS AT THE CONTRACTOR'S EXPENSE,

10. SOFT OR WET SUBGRADE SHALL BE CORRECTED BY "SUBGRADE UNDERCUT"

11. PLACE AND COMPACT FILL MATERIALS IN ACCORDANCE WITH "COMPACTION / SOIL TESTING"

AGGREGATE BASE COURSE

1. AGGREGATE BASE COURSE SHALL BE:

   A. SALVAGED AGGREGATE ONLY AS APPROVED BY THE OWNER'S REPRESENTATIVE,

   B. CRUSHED LIMESTONE MEETING THE SPECIFIED GRADATION, AND/OR

   C. CRUSHED CONCRETE OR SLAG MEETING THE SPECIFIED GRADATION.

2. UNDERLYING SUBGRADE SHALL BE GRADED TO CORRESPOND TO PROPOSED FINISH GRADE OF THE PAVEMENTS, CONFORM TO THE LINES, GRADES, AND CROSS SECTION SHOWN, AND DRAIN TOWARDS STORM WATER COLLECTION SYSTEM (CATCH BASINS, INLETS, CURB CUTS, SPILLWAYS, ETC.) WHILE MEETING THE MINIMUM THICKNESS PER THE PAVEMENT DETAIL.

3. AVERAGE JOB THICKNESS OF COMPACTED MATERIAL SHALL BE WITHIN 1/4 INCH OF THE DESIGN THICKNESS. CORRECT DEFICIENCIES BY SCARIFYING, ADDING MATERIAL, REBLADING, AND RECOMPACTING AS DIRECTED. THE TOTAL THICKNESS OF THE BASE COURSE SHALL BE MEASURED AT THE DIRECTION OF THE OWNER'S REPRESENTATIVE.

4. SHOULD THE SURFACE BECOME ROUGH, CORRUGATED, UNEVEN IN TEXTURE, OR TRAFFIC MARKED PRIOR TO COMPLETION, THE UNSATISFACTORY PORTION SHALL BE SCARIFIED, REWORKED AND RECOMPACTED OR IT SHALL BE REPLACED AS DIRECTED.

UTILITIES

1. UTILITY CONTACTS – REFER TO COVER SHEET

2. UTILITY AUTHORITIES – REFER TO COVER SHEET:

3. THE CONTRACTOR IS SPECIFICALLY CAUTIONED THAT THE LOCATIONS AND/OR ELEVATION OF EXISTING UTILITIES AS SHOWN ON THESE PLANS ARE BASED ON RECORDS OF THE VARIOUS UTILITY COMPANIES AND LIMITED MEASUREMENTS TAKEN IN THE FIELD. THE INFORMATION SHALL NOT BE RELIED ON AS BEING EXACT OR COMPLETE. THE CONTRACTOR SHALL VERIFY EXISTING CONDITIONS PRIOR TO CONSTRUCTION AND NOTIFY THE OWNER'S REPRESENTATIVE OF DISCREPANCIES IN THE PLANS.

4. IT SHALL BE THE RESPONSIBILITY OF THE CONTRACTOR TO RELOCATE ALL EXISTING UTILITIES WHICH CONFLICT WITH THE PROPOSED IMPROVEMENTS SHOWN ON THE PLANS UNLESS OTHERWISE NOTED IN THE PLANS OR DIRECTED BY THE OWNER'S REPRESENTATIVE. THE ENGINEER, ARCHITECT, AND OWNER ASSUME NO RESPONSIBILITY FOR THE COMPLETENESS OR ACCURACY OF THE LOCATION OR DEPTH OF ANY EXISTING UTILITY SHOWN OR NOT SHOWN ON THE PROJECT DRAWINGS.

5. ALL UTILITY INSTALLATIONS AND MATERIALS SHALL BE IN ACCORDANCE WITH THE JURISDICTION'S STANDARD DETAILS, SPECIFICATIONS, AND REQUIREMENTS, WHERE APPLICABLE.

6. CONTRACTOR SHALL NOT OPERATE, INTERFERE WITH, CONNECT ANY PIPE OR HOSE TO, OR TAP ANY WATER MAIN UNLESS DULY AUTHORIZED TO DO SO, IN WRITING, BY THE AUTHORITY HAVING JURISDICTION AND THE OWNER. ANY ADVERSE CONSEQUENCES OF SCHEDULED OR UNSCHEDULED DISRUPTIONS OF SERVICE TO THE PUBLIC ARE TO BE THE LIABILITY OF THE CONTRACTOR.

7. NOTICE SHALL BE GIVEN BY THE CONTRACTOR, UNLESS WAIVED BY THE AUTHORITY HAVING JURISDICTION, TO ALL USERS TO AFFECTED BY A PROPOSED UTILITY OUTAGE, AT LEAST 48 HOURS IN ADVANCE OF THE PROPOSED OUTAGE.

8. A MINIMUM VERTICAL SEPARATION OF 18 INCHES IS REQUIRED AT ALL WATER MAIN CROSSINGS WITH SANITARY SEWER OR STORM SEWER.

9. WHERE A VERTICAL SEPARATION BETWEEN PROPOSED UTILITIES AND EXISTING FRANCHISE UTILITIES IS NOT FEASIBLE, CONTRACTOR SHALL PROVIDE A CONCRETE CRADLE (MDOT S3 OR EQUIVALENT; 6" MIN. THICKNESS) TO PROTECT BOTH UTILITIES.

10. AFTER CONSTRUCTION IS COMPLETED, THE CONTRACTOR SHALL PROVIDE THE OWNER WITH AN AS-BUILT RECORD OF UTILITY CONSTRUCTION. THE AS-BUILT SHALL INCLUDE LOCATION AND LENGTH DEVIATIONS OR CHANGES TO THE PLAN. CONTRACTOR SHALL VERIFY AND RECORD ELEVATIONS UNLESS DIRECTED OTHERWISE BY THE OWNER'S REPRESENTATIVE.

STORM SEWER, DRAINAGE PIPE, AND STORM STRUCTURES

1. SUBMITTALS (FOR EACH PRODUCT):

   A. PIPE - PRODUCT DATA

   B. STRUCTURES, CASTINGS, COVERS, AND GRATES - SHOP DRAWINGS

   C. CERTIFICATES FOR ALL MATERIALS.

2. UNDERDRAIN AND SEWER PIPE SHALL BE OF THE TYPE AND CLASS AS SPECIFIED IN THE PLANS AND SHALL BE INSTALLED TO THE LINE, INVERT, AND GRADE NOTED. STRUCTURES SHALL BE CONSTRUCTED AT THE LOCATION SHOWN AND SHALL BE OF THE SIZE AND TYPE CALLED OUT. FOLLOW ALL MANUFACTURER'S RECOMMENDATIONS FOR INSTALLATION.

3. PLACE PIPE AND STRUCTURES ON SUITABLE, COMPACTED BEDDING MATERIAL. BELL HOLES SHALL EXCAVATED SO THE FULL LENGTH OF THE PIPE BARREL WILL BEAR UNIFORMLY. PIPE SHALL BE CLEANED OF DEBRIS AND PUSHED TIGHT TO FORM A SMOOTH, CONTINUOUS INVERT.

4. WHEN STRUCTURES AND/OR PIPE ARE FIELD FITTED TO ACCOMMODATE A CONFLICT, PIPE SLOPE SHALL BE HELD TO PLAN TO ENSURE DRAINAGE.

5. PRECAST REINFORCED CONCRETE MANHOLES, INLETS, AND CATCH BASINS SHALL CONFORM TO ASTM C 478 AND THE PLAN DETAILS.

6. STRUCTURES FOR STORM SEWERS LESS THAN 18-INCH DIAMETER SHALL HAVE A 24-INCH SUMP UNLESS OTHERWISE NOTED.

7. PROTECT THE PIPE FROM DAMAGE, ABRASION, DISTORTION, BOWING, OR WARPING. 12'-6" PIPE LENGTHS WITH DEVIATE MORE THAN 1" FROM STRAIGHT, AS JUDGED BY THE OWNER'S REPRESENTATIVE, SHALL NOT BE USED.

8. ADJUSTMENT: USE METAL ADJUSTMENT RINGS, A CONCRETE COLLAR, MASONRY ON A FULL MORTAR BED OR OTHER OWNER REPRESENTATIVE APPROVED METHOD. MAXIMUM ADJUSTMENT WITH RINGS IS 15". SET ALL COVERS AND CASTINGS AT THE FINISH GRADE OR "RIM" ELEVATION UNLESS OTHERWISE APPROVED BY THE OWNER'S REPRESENTATIVE.

9. TAPPING: TAKE CARE NOT TO DAMAGE THE STRUCTURE - REPAIR ALL DAMAGE AT CONTRACTOR'S EXPENSE. FILL VOIDS WITH MORTAR AND STRIKE SMOOTH WITH THE INNER WALL.

10. ALL STRUCTURES AND PIPES SHALL BE THOROUGHLY CLEANED BEFORE THEY ARE ACCEPTED.

HOT-MIX ASPHALT (HMA) PAVING

1. HOT-MIX ASPHALT SHALL MEET REQUIREMENTS OF THE MICHIGAN DEPARTMENT OF TRANSPORTATION (MDOT) 2012 STANDARD SPECIFICATIONS FOR CONSTRUCTION AND AS AUGMENTED BELOW.

2. SUBMITTAL – THE ASPHALT MIX DESIGN AND BITUMINOUS MIX SHALL BE SUBMITTED TO THE OWNER'S REPRESENTATIVE FOR APPROVAL.

3. AGGREGATES SHALL COMPLY WITH MDOT SECTION 902.09. MINERAL FILLER SHALL COMPLY WITH MDOT SPECIFICATION 902.11.

4. BINDER SHALL BE PG 58-22. TACK COAT SHALL BE SS-1H IN ACCORDANCE WITH MDOT SPECIFICATION TABLE 904-4.

5. ENVIRONMENTAL FACTORS FOR MATERIAL PLACEMENT – DO NOT PLACE THE HOT-MIX ASPHALT UPON A WET SURFACE OR WHEN THE SURFACE TEMPERATURE OF THE UNDERLYING COURSE IS LESS THAN 45°F. THE TEMPERATURE REQUIREMENTS MAY BE WAIVED BY THE OWNER, IF REQUESTED; HOWEVER, ALL OTHER REQUIREMENTS, INCLUDING COMPACTION, SHALL BE MET.

6. PREPARATION OF THE UNDERLYING SURFACE – IMMEDIATELY BEFORE PLACING THE HOT MIX ASPHALT, CLEAN THE UNDERLYING COURSES OF DUST AND DEBRIS. APPLY A TACK COAT TO UNDERLYING PAVEMENT.

7. PLACEMENT – PLACE AND COMPACT THE MIX AT A TEMPERATURE SUITABLE FOR OBTAINING DENSITY, SURFACE SMOOTHNESS, AND OTHER SPECIFIED REQUIREMENTS. UPON ARRIVAL, PLACE THE MIXTURE TO THE FULL WIDTH BY AN ASPHALT PAVER: IT SHALL BE STRUCK OFF IN A UNIFORM LAYER OF SUCH DEPTH THAT, WHEN THE WORK IS COMPLETED, IT WILL HAVE THE REQUIRED THICKNESS AND CONFORM TO THE GRADE AND CONTOUR INDICATED. REGULATE THE SPEED OF THE PAVER TO ELIMINATE PULLING AND TEARING OF THE ASPHALT MAT. PROMPTLY CORRECT SURFACE IRREGULARITIES IN PAVING COURSE BEHIND PAVER. UNLESS OTHERWISE PERMITTED, PLACEMENT OF THE MIXTURE SHALL BEGIN ALONG THE CENTERLINE OF A CROWNED SECTION OR ON THE HIGH SIDE OF AREAS WITH A ONE-WAY SLOPE. PLACE THE MIXTURE IN CONSECUTIVE ADJACENT STRIPS HAVING A MINIMUM WIDTH OF 10 FEET. THE LONGITUDINAL JOINT IN ONE COURSE SHALL OFFSET THE LONGITUDINAL JOIN IN THE COURSE IMMEDIATELY BELOW BY AT LEAST 1 FOOT; HOWEVER, THE JOINT IN THE SURFACE COURSE SHALL BE AT THE CENTERLINE OF THE PAVEMENT. TRANSVERSE JOINT IN ADJACENT LANES SHALL BE OFFSET A MINIMUM OF 10 FEET. ON ISOLATED AREAS WHERE IRREGULARITIES OR UNAVOIDABLE OBSTACLES MAKE THE USE OF MECHANICAL SPREADING AND FINISHING EQUIPMENT IMPRACTICAL, THE MIXTURE MAY BE SPREAD AND LUTED BY HAND TOOLS.

8. COMPACTION – AFTER PLACING, THE MIXTURE SHALL BE THOROUGHLY AND UNIFORMLY COMPACTED BY ROLLING. COMPACT THE SURFACE AS SOON AS POSSIBLE WITHOUT CAUSING DISPLACEMENT, CRACKING OR SHOVING, BEFORE THE MIXTURE COOLS BELOW 185°F. THE SEQUENCE OF ROLLING OPERATIONS AND THE TYPE OF ROLLERS USED SHALL BE AT THE DISCRETION OF THE CONTRACTOR. THE SPEED OF THE ROLLER SHALL, AT ALL TIMES, BE SUFFICIENTLY SLOW TO AVOID DISPLACEMENT OF THE HOT MIXTURE AND BE EFFECTIVE IN COMPACTION. ANY DISPLACEMENT OCCURRING AS A RESULT OF REVERSING THE DIRECTION OF THE ROLLER, OR FROM ANY OTHER CAUSE, SHALL BE

OHM
ARCHITECTS ENGINEERS PLANNERS
34000 Plymouth Road
Livonia, MI 48150
P (734) 522-6711 | F (734) 522-6427
OHM-ADVISORS.COM

ISSUE: BID SET - NOT FOR CONSTRUCTION
REVISIONS:
02/14/2020 RESUBMITTED TO TOWNSHIP

DATE	PROJ NUMBER	ENGARCH	PROJ MGR	CADD	COUNTY	MUNICIPALITY
02/14/2020	0561-19-0060	OP	GM	ADG	WASHTENAW	PITTSFIELD CHARTER TWSP

OXFORD DESIGN-BUILD LLC
UNIVERSITY OF MICHIGAN LAUNDRY DEPOT

CIVIL NOTES

SHEET C-011

COPYRIGHT 2019 OHM ALL DRAWINGS AND WRITTEN MATERIALS APPEARING HEREIN CONSTITUTE THE ORIGINAL AND UNPUBLISHED WORK OF OHM AND THE SAME MAY NOT BE DUPLICATED, DISTRIBUTED, OR DISCLOSED WITHOUT PRIOR WRITTEN CONSENT OF OHM

DRAWING PATH: P:\0201_0600\0561190060_UM_Laundry_Depot_AA_Airport\Drawings\Civil\Plans_Const\190020NOT.dwg Feb 13, 2020 - 11:15am

CORRECTED AT ONCE. FURNISH SUFFICIENT ROLLERS TO HANDLE THE OUTPUT OF THE PLANT. CONTINUE ROLLING UNTIL THE SURFACE IS OF UNIFORM TEXTURE, TRUE TO GRADE AND CROSS SECTION, AND THE REQUIRED FIELD DENSITY IS OBTAINED. TO PREVENT ADHESION OF THE MIXTURE TO THE ROLLER, KEEP THE WHEELS PROPERLY MOISTENED BUT EXCESSIVE WATER WILL NOT BE PERMITTED. IN AREAS NOT ACCESSIBLE TO THE ROLLER, THE MIXTURE SHALL BE THOROUGHLY COMPACTED WITH HAND TAMPERS. ANY MIXTURE THAT BECOMES LOOSE AND BROKEN, MIXED WITH DIRT, CONTAINS CHECK-CRACKING, OR IS IN ANY WAY DEFECTIVE SHALL BE REMOVED FULL DEPTH, REPLACED WITH FRESH HOT MIXTURE AND IMMEDIATELY COMPACTED TO CONFORM TO THE SURROUNDING AREA. THIS WORK SHALL BE DONE AT THE CONTRACTOR'S EXPENSE. SKIN PATCHING WILL NOT BE ALLOWED.

9. MAXIMUM DENSITY SHALL BE DETERMINED BY ONE OF THE FOLLOWING PROCEDURES, AT THE DIRECTION OF THE TESTING AGENCY:

   A. MARSHALL PROCEDURE ASTM D 1559 USING 50 BLOWS ON EACH END OF THE SPECIMEN AS THE COMPACTIVE EFFORT. THE TEMPERATURE OF THE ASPHALT SPECIMEN AT THE TIME OF COMPACTION SHALL BE 275°F UNLESS OTHERWISE SPECIFIED. ONE SET OF THREE (3) SPECIMENS SHALL BE MADE ON THE FIRST DAY OF PLACEMENT AND ON SUBSEQUENT DAYS AS DIRECTED BY THE TESTING AGENCY.

   B. ROLLING METHOD: MEASURE AND DOCUMENT EACH PASS OF THE FINISH ROLLER UNTIL THE IN-PLACE DENSITY, MEASURED WITH THE NUCLEAR GAUGE, INDICATES A DECREASE IN VALUE. THE PREVIOUS RECORDED DENSITY SHALL BE DEEMED OPTIMAL AND USED AS THE MAXIMUM DENSITY FOR ACCEPTANCE ON THAT DAY.

10. TESTING – THE FOLLOWING TESTING SHALL BE PERFORMED BY THE TESTING AGENCY. THE CONTRACTOR SHALL FILL CORE HOLES WITH HMA AND COMPACT.

   A. % BITUMEN – EXTRACTION PER ASTM D2172, TESTED AT A FREQUENCY OF 1 PER 250 TON.

   B. SIEVE ANALYSIS – EXTRACTION PER ASTM D2172 AND ASTM C136, TESTED AT A FREQUENCY OF 1 PER 250 TON.

   C. THICKNESS CORE SAMPLES AT A MINIMUM FREQUENCY OF 2 PER DAY WITH A MINIMUM TOTAL 4 CORE SAMPLES.

   D. DENSITY- 97% OF MAXIMUM – TESTING WITH NUCLEAR GAUGE PER ASTM D2950, AT A MINIMUM FREQUENCY OF 1 PER EVERY 5,000 SQUARE FEET OF HOT MIX PLACEMENT WITH AT LEAST 4 TESTS PER DAY.

   E. TEMPERATURE – EACH LOAD SHALL BE TESTED.

   F. TESTER SHALL TAKE SAMPLES FOR TESTING DURING EACH DAY OF WORK AND PERFORM REQUIRED VERIFICATION TESTING IN ACCORDANCE WITH MDOT SPECIAL PROVISION 12SP-501J-04 INCLUDING PRICE ADJUSTMENTS FOR PARAMETERS OUT-OF-SPECIFICATION. REFERENCES TO THE "LOCAL AGENCY" SHALL BE TREATED AS THE OWNER.

11. CORRECTING DEFICIENT AREAS – ALL ASPHALTIC COURSES OR COATS THAT ARE DEFECTIVE, CONTAMINATED, DAMAGED, OR OTHERWISE UNACCEPTABLE, SHALL BE REMOVED AND REPLACED AT NO ADDITIONAL COST TO THE OWNER. SKIN PATCHING OR FINISHED OVERLAY WILL NOT BE PERMITTED.

12. BASE AND LEVELLING COURSES SHALL BE PLACED AND COMPACTED WITHIN ½ INCH OF THE DESIGN COURSE THICKNESS.

13. WEARING COURSES SHALL BE PLACED AND COMPACTED WITHIN ¼ INCH OF THE DESIGN COURSE THICKNESS.

14. PAVEMENT SURFACE SMOOTHNESS: COMPACT EACH COURSE TO PRODUCE A SURFACE SMOOTHNESS WITHIN THE FOLLOWING TOLERANCES AS DETERMINED BY USING A 10-FOOT STRAIGHTEDGE APPLIED TRANSVERSELY OR LONGITUDINALLY TO PAVED AREAS:

   A. BASE COURSE AND LEVELLING COURSE: 1/4 INCH.

   B. WEARING COURSE: 1/8 INCH.

   C. CROWNED SURFACES: TEST WITH CROWNED TEMPLATE CENTERED AND AT RIGHT ANGLE TO CROWN. MAXIMUM ALLOWABLE VARIANCE FROM TEMPLATE IS 1/4 INCH.

BITUMINOUS TACK AND PRIME COATS

1. BITUMINOUS TACK AND PRIME COATS TO MEET REQUIREMENTS OF THE MICHIGAN DEPARTMENT OF TRANSPORTATION (MDOT) 2012 STANDARD SPECIFICATIONS FOR CONSTRUCTION DIVISION 9.

2. SUBMITTAL – COPIES OF ALL TEST RESULTS FOR EMULSIFIED ASPHALT, BITUMINOUS MATERIALS, AND CERTIFIED COPIES OF THE MANUFACTURER'S TEST REPORTS INDICATING TEMPERATURE VISCOSITY RELATIONSHIP FOR CUTBACK ASPHALT AND COMPLIANCE WITH APPLICABLE SPECIFIED REQUIREMENTS SHALL BE SUBMITTED TO THE GOVERNMENT FOR APPROVAL.

3. ENVIRONMENTAL FACTORS FOR MATERIAL PLACEMENT – APPLY BITUMINOUS COAT ONLY WHEN THE SURFACE TO RECEIVE THE BITUMINOUS COAT IS DRY. APPLY BITUMINOUS COAT ONLY WHEN THE ATMOSPHERIC TEMPERATURE IN THE SHADE IS 5°F OR ABOVE WHEN THE TEMPERATURE HAS NOT BEEN BELOW 35°F FOR THE 12 HOURS PRIOR TO APPLICATION, UNLESS OTHERWISE DIRECTED.

4. TACK COAT SHALL BE APPLIED AT A UNIFORM RATE OF 0.05 TO 0.15 GALLONS PER SQUARE YARD OF PAVEMENT SURFACE.

5. PRIME COAT INFORMATION – PRIME COAT SHALL BE APPLIED IN A UNIFORM, CONTINUOUS SPREAD AT THE RATE OF NOT LESS THAN 0.2 GALLONS, AND NOT MORE THAN 0.3 GALLONS, PER SQUARE YARD APPLIED IN TWO APPLICATIONS.

6. PREPARATION OF SURFACE – IMMEDIATELY BEFORE APPLYING THE BITUMINOUS COAT, REMOVE ALL LOOSE MATERIAL, DIRT, CLAY, OR OTHER OBJECTIONABLE MATERIAL FROM THE SURFACE TO BE TREATED BY MEANS OF A POWER BROOM OR BLOWER SUPPLEMENTED WITH HAND BROOMS. THE SURFACE SHALL BE DRY AND CLEAN AT THE TIME OF TREATMENT.

7. CURING PERIOD – FOLLOWING APPLICATION OF THE BITUMINOUS MATERIAL AND PRIOR TO APPLICATION OF THE SUCCEEDING LAYER OF PAVEMENT, ALLOW THE BITUMINOUS COAT TO CURE AND TO OBTAIN EVAPORATION OF ANY VOLATILES OR MOISTURE. MAINTAIN THE COATED SURFACE UNTIL THE SUCCEEDING LAYER OF PAVEMENT IS PLACED, BY PROTECTING THE SURFACE AGAINST DAMAGE AND BY REPAIRING AND RECOATING DEFICIENT AREAS.

8. TRAFFIC CONTROLS – KEEP TRAFFIC OFF SURFACES FRESHLY TREATED WITH BITUMINOUS MATERIAL. PROVIDE SUFFICIENT WARNING SIGNS AND BARRICADES SO THAT TRAFFIC WILL NOT TRAVEL OVER FRESHLY TREATED SURFACES.

CONCRETE – PAVEMENT CONSTRUCTION

1. CONCRETE WORK SHALL MEET THE REQUIREMENTS OF MDOT, ACI 301 "SPECIFICATIONS FOR STRUCTURAL CONCRETE", AND AS AUGMENTED BELOW.

2. REMOVAL OF EXISTING CONCRETE CURB AND GUTTER, CONCRETE SLAB AND CONCRETE SIDEWALK SHALL BE TO THE NEXT CLOSEST JOINT OUTSIDE OF THE PLANNED REMOVAL AREA.

3. CONCRETE CURB AND GUTTER REPLACED DURING CONSTRUCTION SHALL MATCH THE CROSS SECTION OF THE REMAINING CONCRETE CURB AND GUTTER.

4. REPLACEMENT PAVEMENT SECTIONS TO MATCH OR EXCEED EXISTING CROSS SECTION.

5. PAVEMENT REMOVAL:

   A. SAWCUT AND REMOVE EXISTING PAVEMENT AND AGGREGATE BASE FROM PARKING LOT TO A DEPTH NECESSARY TO CONSTRUCT THE PROPOSED CROSS SECTION AT THE PLAN FINISH GRADES.

   B. GRADE SUBGRADE TO CORRESPOND TO PROPOSED FINISH GRADE OF PAVEMENTS - MAINTAIN MINIMUM THICKNESS.

   C. UNDER OWNER'S REPRESENTATIVE OBSERVANCE, PROOF-ROLL SUBGRADE. SOFT POCKETS AND RUTTING AREAS SHALL BE REPAIRED BY FOLLOWING "SUBGRADE UNDERCUT"

   D. PLACE AND COMPACT BASE COURSE(S) PER THE PLAN DETAIL. FACILITATE DENSITY TESTING DURING BASE COURSE PLACEMENT.

6. FINAL PAVEMENT ELEVATIONS SHALL COINCIDE WITH PRE-EXISTING ADJOINING SURFACE ELEVATIONS AND PRE-EXISTING SURFACE DRAINAGE SLOPES SHALL BE MAINTAINED UNLESS ALTERATIONS ARE CALLED OUT ON THE PLANS OR DIRECTED BY THE OWNER'S REPRESENTATIVE.

7. WEATHER RESTRICTIONS ON CONCRETE PLACEMENT:

   A. COLD WEATHER LIMITATIONS – DO NOT PLACE CONCRETE WHEN THE AIR TEMPERATURE REACHES 40°F AND IS FALLING, OR IS ALREADY BELOW THAT POINT. PLACEMENT MAY BEGIN WHEN THE AIR TEMPERATURE REACHES 35° F AND IS RISING, OR IS ALREADY ABOVE 40°F. MAKE PROVISIONS TO PROTECT THE CONCRETE FROM FREEZING DURING THE SPECIFIED CURING PERIOD. IF NECESSARY TO PLACE CONCRETE WHEN THE TEMPERATURE OF THE AIR, AGGREGATES, OR WATER IS BELOW 35°F, PLACEMENT AND PROTECTION SHALL BE APPROVED IN WRITING.

   B. HOT WEATHER LIMITATIONS – THE TEMPERATURE OF THE CONCRETE AS PLACED SHALL NOT EXCEED 90°F. THE MIXING WATER AND/OR AGGREGATES SHALL BE COOLED, IF NECESSARY, TO MAINTAIN A SATISFACTORY PLACING TEMPERATURE. FOLLOW PROCEDURES RECOMMENDED IN ACI 305R "HOT WEATHER CONCRETING."

   C. CONCRETE SHALL NOT BE PLACED DURING RAIN EVENTS THAT WOULD SATURATE THE CONCRETE UNLESS ADEQUATE MEASURES ARE TAKEN BY THE CONTRACTOR, AND APPROVED BY THE OWNER'S REPRESENTATIVE, TO ENSURE THE QUALITY OF THE PRODUCT.

8. PRODUCT INFORMATION:

   A. SUBMIT EACH PRODUCT FOR APPROVAL BY THE OWNER'S REPRESENTATIVE PRIOR TO PLACEMENT.

   B. CONCRETE:

      i. STRENGTH - MINIMUM COMPRESSIVE STRENGTH AS NOTED ON THE PLANS.

      ii. AIR CONTENT – THE CONCRETE SHALL BE AIR ENTRAINED WITH AIR CONTENT BY VOLUME OF CONCRETE BETWEEN 5.5 TO 8.0 PERCENT, BASED ON MEASUREMENTS MADE IMMEDIATELY AFTER DISCHARGED FROM THE MIXER.

      iii. SLUMP – THE CONCRETE SLUMP SHALL BE 3 INCHES PLUS OR MINUS 1 INCH PER ASTM C143/C143M UNLESS A WATER REDUCING ADMIXTURE IS USED.

      iv. WATER TO CEMENT RATIO: 0.45

      v. CEMENTITIOUS MATERIAL - SUBMIT A PRODUCT COMPLIANT WITH MDOT THAT WILL PREVENT ALKALI–SILICA REACTION (ASR) BY INCLUDING SLAG OR A LOW ALKALI CEMENT

   C. REINFORCEMENT STEEL – REINFORCEMENT BARS AND STEEL SHALL CONFORM TO MDOT SECTIONS 905 AND 914.

   D. CURING COMPOUNDS:

      i. WHITE - ASTM C 309, TYPE 2

      ii. TRANSPARENT - ASTM C 309, TYPE 1-D, CLASS B WITH FUGITIVE DYE

9. CURING AND PROTECTION – FOLLOW ACI 308R "GUIDE TO CURING CONCRETE." PROTECT CONCRETE AGAINST LOSS OF MOISTURE AND RAPID TEMPERATURE CHANGES FOR AT LEAST 7 DAYS FROM THE BEGINNING OF THE CURING OPERATION. PROTECT UNHARDENED CONCRETE FROM RAIN AND FLOWING WATER. ALL EQUIPMENT NEEDED FOR ADEQUATE CURING AND PROTECTION OF THE CONCRETE SHALL BE ON HAND AND READY FOR USE BEFORE ACTUAL CONCRETE PLACEMENT BEGINS. PROTECTION SHALL BE PROVIDED AS NECESSARY TO PREVENT CRACKING OF THE PAVEMENT DUE TO TEMPERATURE CHANGES AND MOISTURE DURING THE CURING PERIOD. INADEQUATE CURING SHALL BE GROUND FOR REJECTION OF THE WORK AND REMOVAL AND REPLACEMENT BY THE CONTRACTOR AT NO ADDITIONAL EXPENSE TO THE OWNER.

10. TESTING AND ACCEPTANCE:

   A. TESTING AGENCY: SEE "AUTHORITIES" - MAY STOP OR REJECT WORK OR PRODUCTS NOT MEETING PROJECT REQUIREMENTS. TESTING AGENCY SHALL PERFORM ALL TESTS, EXCEPT AS NOTED.

   B. STRENGTH CYLINDERS - 1 SET OF 4 CYLINDERS EVERY 50 CY, AT LEAST TWICE PER DAY PER ASTM C 172 AND ASTM C 31. CONTRACTOR SHALL CREATE ADDITIONAL TEST CYLINDERS FOR VERIFICATION OF THE TESTING AGENCY'S RESULTS.

   C. STRENGTH TEST - EACH STRENGTH TEST RESULT SHALL BE THE AVERAGE OF 2 TEST CYLINDERS FROM THE SAME CONCRETE SAMPLE TESTED AT THE DESIGN STRENGTH PERIOD (28-DAYS UNLESS MODIFIED), UNLESS OTHERWISE SPECIFIED OR APPROVED. CONCRETE SPECIFIED ON THE BASIS OF COMPRESSIVE STRENGTH WILL BE CONSIDERED SATISFACTORY IF THE AVERAGES OF ALL SETS OF THREE CONSECUTIVE STRENGTH TEST RESULTS EQUAL OR EXCEED THE SPECIFIED STRENGTH, AND NO INDIVIDUAL STRENGTH TEST RESULT FALLS BELOW THE SPECIFIED STRENGTH BY MORE THAN 500 PSI.

   D. AIR CONTENT – ASTM C173/C173M. TWO TESTS PER CLASS OF CONCRETE DURING EACH SHIFT. ADDITIONAL TESTS SHALL BE MADE WHEN EXCESSIVE VARIATION IN CONCRETE WORKABILITY IS NOTICED. IF RESULTS ARE OUT OF TOLERANCE, THE CONTRACTOR SHALL TAKE APPROPRIATE ACTION TO HAVE THE AIR CONTENT CORRECTED AT THE PLANT. ADDITIONAL TESTS FOR AIR CONTENT WILL BE PERFORMED ON EACH TRUCKLOAD OF MATERIAL UNTIL SUCH TIME AS THE AIR CONTENT IS WITHIN THE TOLERANCE SPECIFIED.

   E. SLUMP TEST – TWO (2) SLUMP TESTS SHALL BE MADE OF EACH CLASS OF CONCRETE FOR EVERY 250 CUBIC YARDS, OR FRACTION THEREOF, OF CONCRETE PLACED DURING EACH SHIFT. ADDITIONAL TESTS SHALL BE PERFORMED WHEN EXCESSIVE VARIATION IN THE WORKABILITY OF THE CONCRETE IS NOTED OR WHEN EXCESSIVE CRUMBLING OR SLUMPING IS NOTED ALONG THE EDGES OF SLIP-FORMED CONCRETE.

   F. THICKNESS EVALUATION – THE ANTICIPATED THICKNESS OF THE CONCRETE SHALL BE DETERMINED PRIOR TO PLACEMENT BY PASSING A TEMPLATE THROUGH THE FORMED SECTION OR BY MEASURING THE DEPTH OF OPENING OF THE EXTRUSION TEMPLATE OF THE CURB FORMING MACHINE. IF A SLIP FORM PAVER IS USED FOR PLACEMENT, THE SUBGRADE SHALL BE TRUE TO GRADE PRIOR TO CONCRETE PLACEMENT AND THE THICKNESS WILL BE DETERMINED BY MEASURING EACH EDGE OF THE COMPLETED SLAB.

   G. CONCRETE REJECTED PRIOR TO PLACEMENT SHALL BE REMOVED FROM THE SITE. CONCRETE REJECTED AFTER PLACEMENT SHALL BE SAWCUT (FULL DEPTH) AND REMOVED FROM THE SITE AND REPLACED IN KIND WITH ACCEPTABLE MATERIALS WHICH MEET THE CONTRACT REQUIREMENTS, UNLESS A PRICE ADJUSTMENT IS ACCEPTED BY THE OWNER.

CONCRETE JOINTS AND SEALANT

1. ALL JOINTS SHALL BE SAWCUT NO LATER THAN 12 HOURS AFTER POURING.

2. JOINT SPACING AND PATTERN SHALL BE COMPLIANT WITH ACI 301 "SPECIFICATIONS FOR STRUCTURAL CONCRETE".

3. CONCRETE JOINT FILLER SEALANT SHALL BE ASTM D 6690 TYPE II COMPLIANT WITH MDOT SECTION 914.04.

4. JOINTS SHALL BE CONSTRUCTED, SAWED, AND SEALED IN ACCORDANCE WITH MDOT SECTION 602, INCIDENTAL TO THE CONCRETE WORK.

5. CURING PERIOD – FOLLOWING APPLICATION OF THE MATERIAL MAINTAIN PROTECTIVE MEASURES TO PROVIDE SUFFICIENT TIME TO ALLOW THE SEALANT TO BE TACK FREE.

6. TRAFFIC CONTROLS – KEEP TRAFFIC OFF SURFACES FRESHLY TREATED WITH SEALANT. PROVIDE SUFFICIENT WARNING SIGNS AND BARRICADES SO THAT TRAFFIC WILL NOT TRAVEL OVER FRESHLY TREATED SURFACES.

OHM
ARCHITECTS ENGINEERS PLANNERS
34000 Plymouth Road
Livonia, MI 48150
P (734) 522-6711 | F (734) 522-6427
OHM-ADVISORS.COM

ISSUE: BID SET - NOT FOR CONSTRUCTION

REVISIONS:

02/14/2020 RESUBMITTED TO TOWNSHIP

DATE	PROJ NUMBER	ENG/ARCH	PROJ MGR	CADD	COUNTY	MUNICIPALITY
02/14/2020	0505-19-0060	GP	GM	ADG	WASHTENAW	PITTSFIELD CHARTER TWSP

OXFORD DESIGN-BUILD LLC
UNIVERSITY OF MICHIGAN LAUNDRY DEPOT

CIVIL NOTES

SHEET C-012

COPYRIGHT 2019 OHM ALL DRAWINGS AND WRITTEN MATERIALS APPEARING HEREIN CONSTITUTE THE ORIGINAL AND UNPUBLISHED WORK OF OHM AND THE SAME MAY NOT BE DUPLICATED, DISTRIBUTED, OR DISCLOSED WITHOUT PRIOR WRITTEN CONSENT OF OHM

DRAWING PATH: P:\0201_0600\0561190060_UM_Laundry_Depot_AA_Airport\Drawings\Civil\Plans_Const\190020NOT.dwg Feb 13, 2020 - 11:15am

CONCRETE – RETAINING WALL CONSTRUCTION

1. PROVIDE MINIMUM 28-DAY CONCRETE COMPRESSIVE STRENGTH OF 4,000 PSI (f'c = 4,000 PSI). PROVIDE NORMAL WEIGHT CONCRETE, WITH 6% ± 1.5% ENTRAINED AIR FOR EXTERIOR APPLICATIONS , MAXIMUM W/C RATIO < 0.45, AND MAXIMUM 4" SLUMP, UNLESS SUPER-PLASTICIZERS ARE USED. USE OF SUPER-PLASTICIZERS IS SUBJECT TO PRIOR APPROVAL BY THE ENGINEER.

2. PROVIDE READY-MIX CONCRETE CONFORMING TO ASTM C-94.

3. CONCRETE SHALL BE PLACED IN ACCORDANCE WITH ACI 117 301, 305R, 306.1, AND 308.1, LATEST APPLICABLE EDITION.

4. PLACE ANCHOR BOLTS SET IN CONCRETE TO RECEIVE STRUCTURAL STEEL WITHIN TOLERANCES SPECIFIED IN THE LATEST APPLICABLE AISC "CODE OF STANDARD PRACTICE FOR STEEL BUILDINGS AND BRIDGES" IN LIEU OF TOLERANCES SPECIFIED IN ACI "STANDARD SPECIFICATIONS FOR TOLERANCES FOR CONCRETE CONSTRUCTION AND MATERIALS".

5. REINFORCING STEEL CONFORMING TO ASTM A-615, GRADE 60 IS REQUIRED. PLACE REINFORCING STEEL IN CONFORMANCE WITH CRSI MANUAL OF STANDARD PRACTICE.

6. CONFORM TO ASTM A706/A706M, GRADE 60 FOR REINFORCING STEEL TO BE WELDED. PLACE REINFORCING STEEL IN CONFORMANCE WITH CRSI MANUAL OF STANDARD PRACTICE. WELD REINFORCED STEEL IN ACCORDANCE WITH AWS D1.1 PERFORM WELDING BY CERTIFIED WELDERS. USE E70XX ELECTRODES.

7. REINFORCING STEEL SHALL HAVE A MINIMUM CONCRETE COVER AS LISTED BELOW UNLESS OTHERWISE NOTED.

   A. CONCRETE CAST AGAINST AND PERMANENTLY EXPOSED EARTH: 3"

   B. CONCRETE CAST AGAINST FORMS BUT EXPOSED TO EARTH OR WEATHER

      1. NO. 5 OR SMALLER 1 1/2"

      2. GREATER THAN NO.5 2"

   C. SLAB ON GRADE: 2" FROM T/SLAB

8. POST INSTALLED ANCHORS OR REBAR SHALL BE ANCHORED INTO CONCRETE WITH POWERS PE1000+ EPOXY INJECTION ADHESIVE, OR AN APPROVED EQUAL. REFER TO MANUFACTURER'S RECOMMENDATIONS FOR INSTALLATION INSTRUCTIONS. SEE DETAILS FOR MINIMUM EMBEDMENT.

GRADING AND RESTORATION

1. SUBMIT RESTORATION PROCEDURE, SEEDS, FERTILIZERS, AND/OR PLANTS TO THE ENGINEER FOR APPROVAL PRIOR TO EXECUTING THE WORK.

2. ALL DISTURBED UNPAVED LAWN AREAS ARE TO RECEIVE FOUR INCHES OF TOPSOIL, THE CONTRACTOR MAY USE SOD, SEED AND MULCH, OR HYDROSEED, UNLESS OTHERWISE NOTED. THESE AREAS SHALL BE WATERED BY THE CONTRACTOR UNTIL A HEALTHY STAND OF GRASS IS OBTAINED.

3. TOPSOIL PLACEMENT:

   A. BEFORE SPREADING THE TOPSOIL, ASSURE THAT ALL NECESSARY EROSION AND SEDIMENT CONTROL PRACTICES ARE IN PLACE AND FUNCTIONING PROPERLY. THESE PRACTICES MUST BE MAINTAINED UNTIL THE SITE IS PERMANENTLY STABILIZED.

   B. GRADING – MAINTAIN GRADES ON THE AREAS TO BE TOPSOILED ACCORDING TO THE APPROVED PLAN AND DO NOT ALTER THEM BY ADDING TOPSOIL.

   C. IMMEDIATELY PRIOR TO SPREADING THE TOPSOIL, LOOSEN OR SCARIFY THE SUBGRADE TO A DEPTH OF AT LEAST 4 INCHES.

   D. TOPSOIL SHALL NOT BE SPREAD WHILE IT IS FROZEN OR MUDDY OR WHEN THE SUBSOIL IS FROZEN OR MUDDY.

   E. COMPACT THE TOPSOIL ENOUGH TO ENSURE GOOD CONTACT WITH THE UNDERLYING SOIL, BUT AVOID EXCESSIVE COMPACTION, AS IT INCREASES RUNOFF AND INHIBITS SEED GERMINATION AND SEEDLING GROWTH.

4. ALL DISTURBED DETENTION AREAS ARE TO BE SEEDED AND MULCHED USING AN APPROVED SEED MIX.

5. ALL PROPOSED SLOPES ARE TO BE GRADED TO 4H:1V OR FLATTER, UNLESS OTHERWISE INDICATED ON SHEETS.

6. SPOT ELEVATIONS SHOWN INDICATE FINISHED PAVEMENT ELEVATIONS UNLESS OTHERWISE NOTED. ELEVATIONS SHOWN AT STRUCTURES ARE TO FINISH GRADE UNLESS OTHERWISE INDICATED.

7. FINISHED GRADING SHALL BE COMPLETED ACCORDING TO THE GRADING PLAN CONTOURS AND SPOT GRADES. THE CONTRACTOR SHALL UNIFORMLY GRADE AREAS WITHIN LIMITS OF GRADING, INCLUDING ADJACENT TRANSITION AREAS. PROVIDE A SMOOTH FINISHED SURFACE WITHIN SPECIFIED TOLERANCES, WITH UNIFORM LEVELS OR SLOPES BETWEEN POINTS, WHERE ELEVATIONS ARE SHOWN, OR BETWEEN SUCH POINTS, AND EXISTING GRADES. AREAS THAT HAVE BEEN FINISH GRADED SHALL BE PROTECTED FROM SUBSEQUENT CONSTRUCTION OPERATIONS.

8. AFTER THE SITE GRADING IS COMPLETED, IF EXCESS SOIL MATERIAL OR DEMOLITION DEBRIS EXISTS, THE CONTRACTOR SHALL DISPOSE OF ALL EXCESS SOIL AND DEBRIS MATERIAL IN A MANNER ACCEPTABLE TO THE OWNER AND THE REGULATING AGENCIES INVOLVED.

9. DISTURBED AREAS SHALL BE SLOPED AND GRADED TO RESTORE ORIGINAL DRAINAGE PATTERNS, OR PROVIDE POSITIVE DRAINAGE WHERE NEEDED.

10. RESTORATION OF NON-PAVED AREAS SHALL BE WITH SALVAGED OR IMPORTED TOPSOIL AND PLANTED IN ACCORDANCE WITH THE LANDSCAPE PLANS OR SEEDED AND MULCHED. SEEDED SLOPES GREATER THAN 1V:6H SHALL BE STABILIZED WITH SEED AND STAKED MULCH BLANKETS.

OHM

ARCHITECTS ENGINEERS PLANNERS

34000 Plymouth Road
Livonia, MI 48150
P (734) 522-6711 | F (734) 522-6427

OHM-ADVISORS.COM

ISSUE: BID SET - NOT FOR CONSTRUCTION

REVISIONS:

02/14/2020 RESUBMITTED TO TOWNSHIP

DATE	PROJ NUMBER	ENG/ARCH	PROJ MGR	CADD	COUNTY	MUNICIPALITY
02/14/2020	055-19-0060	GP	GM	ADG	WASHTENAW	PITTSFIELD CHARTER TWSP

OXFORD DESIGN-BUILD LLC
UNIVERSITY OF MICHIGAN LAUNDRY DEPOT

CIVIL NOTES

SHEET C-013

COPYRIGHT 2019 OHM ALL DRAWINGS AND WRITTEN MATERIALS APPEARING HEREIN CONSTITUTE THE ORIGINAL AND UNPUBLISHED WORK OF OHM AND THE SAME MAY NOT BE DUPLICATED, DISTRIBUTED, OR DISCLOSED WITHOUT PRIOR WRITTEN CONSENT OF OHM

DRAWING PATH: P:\0201_0600\056190060_UM_Laundry_Depot_AA_Airport\Drawings\Civil\Plans_Const190020NOT.dwg Feb 13, 2020 - 11:15am

JOB BENCHMARK # 200 CHISELED "+" IN CONCRETE LOADING PAD ELEV 831.60
JOB BENCHMARK # 201 CHISELED "+" ON CONCRETE PAD, NE QUADRANT ELEV 833.24
TRAVERSE POINT # 100 N 265778.52 E 13292183.05 ELEV 831.60
TRAVERSE POINT # 101 N 265466.51 E 13292142.46 ELEV 830.14

BENCHMARK ELEVATIONS NOTE:
BENCHMARK ELEVATIONS SHOWN ON THESE PLANS ARE BASED ON NAVD88 DATUM.

EXISTING STORM WATER STRUCTURES

#843 STM SQ CATCH BASIN
RIM 830.77
12" RCP N 824.55
12" RCP S 824.55
8" CLAY E 825.68

#584 STM RD CATCH BASIN
RIM 830.83
4" PVC E 828.61

#483 STM RD CATCH BASIN
RIM 830.44
4" PVC E 828.18

#897 STM SQ CATCH BASIN
RIM 828.54
12" RCP N 822.08
12" RCP S 821.99

#1050 STM MANHOLE
RIM 833.54
12" RCP N 828.56
12" RCP S 828.46
12" RCP W 828.49

LEGEND

- 12" STM — EXISTING STORM SEWER
- SAN — SANITARY SEWER
- 665 / 664 — EXISTING CONTOUR
- EXISTING SQUARE CATCH BASIN
- EXISTING ROUND CATCH BASIN
- S — EXISTING SANITARY MANHOLE
- CONCRETE SURFACE REMOVAL
- HMA REMOVAL
- R — REMOVE
- SANITARY SEWER EASEMENT

UTILITY NOTE:
CONTRACTOR SHALL FIELD VERIFY LOCATION AND ELEVATION OF BURIED UTILITIES AND TOPOGRAPHIC FEATURES PRIOR TO CONSTRUCTION. CONTRACTOR SHALL NOTIFY OWNER'S REPRESENTATIVE OF ANY DISCREPANCIES ON THE PLAN ON THE SAME DAY THEY ARE DISCOVERED.

FLOODPLAIN NOTE:
NO FLOODPLAIN ON SITE PER FEMA PANEL 26161C0401E DATED 3 APRIL 2012 (ZONE X)

WETLAND NOTE:
NO WETLAND FOUND ON SITE

ZONING:
FB FORM BASED MIXED USE

811 Know what's **below.** **Call** before you dig.

GRAPHIC SCALE: HALF 20 feet; FULL 40 feet
0 10 20 40 60

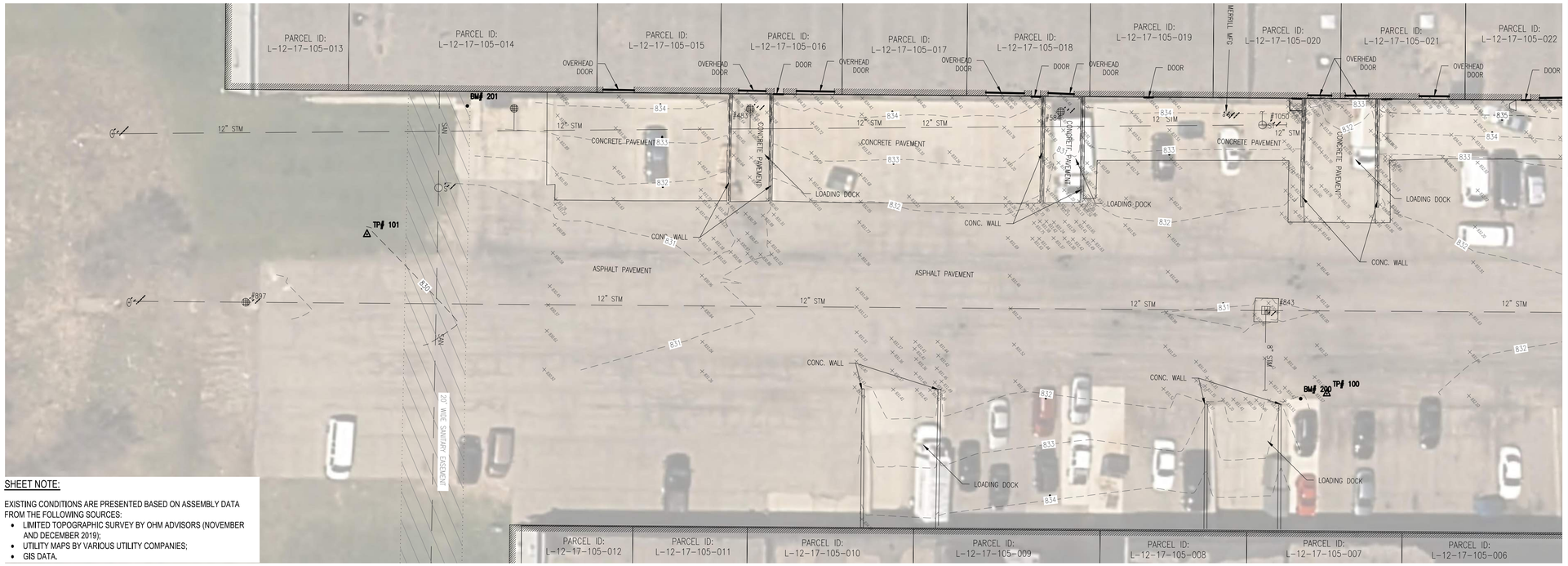

SHEET NOTE:
EXISTING CONDITIONS ARE PRESENTED BASED ON ASSEMBLY DATA FROM THE FOLLOWING SOURCES:
- LIMITED TOPOGRAPHIC SURVEY BY OHM ADVISORS (NOVEMBER AND DECEMBER 2019);
- UTILITY MAPS BY VARIOUS UTILITY COMPANIES;
- GIS DATA.

EXISTING CONDITIONS
SCALE 1" = 20'

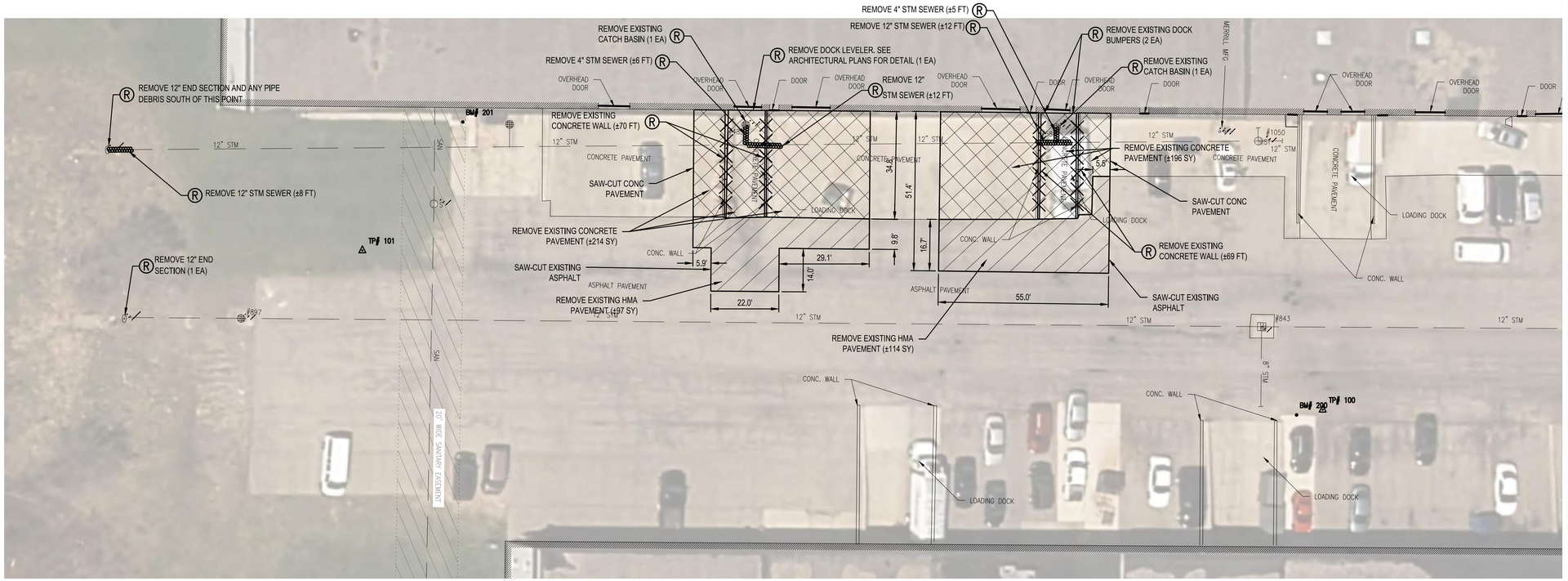

DEMOLITION PLAN
SCALE 1" = 20'

OHM
ARCHITECTS ENGINEERS PLANNERS
34000 Plymouth Road
Livonia, MI 48150
P (734) 522-6711 | F (734) 522-6427
OHM-ADVISORS.COM

ISSUE	BID SET - NOT FOR CONSTRUCTION
REVISIONS:	
02/14/2020	RESUBMITTED TO TOWNSHIP
---	---
---	---
---	---
---	---

DATE	PROJ NUMBER	ENG/ARCH	PROJ MGR	CADD	COUNTY	MUNICIPALITY
02/14/2020	095-19-0060	GP	GM	ADG	WASHTENAW	PITTSFIELD CHARTER TWSP

OXFORD DESIGN-BUILD LLC
UNIVERSITY OF MICHIGAN LAUNDRY DEPOT
EXISTING CONDITIONS AND DEMOLITION PLAN

SHEET C-110

COPYRIGHT 2019 OHM ALL DRAWINGS AND WRITTEN MATERIALS APPEARING HEREIN CONSTITUTE THE ORIGINAL AND UNPUBLISHED WORK OF OHM AND THE SAME MAY NOT BE DUPLICATED, DISTRIBUTED, OR DISCLOSED WITHOUT PRIOR WRITTEN CONSENT OF OHM

DRAWING PATH: P:\0201_9600\0561190060_UM_Laundry_Depot_AA_Airport\Drawings\Civil\Plans_Const\190020ISUR.dwg Feb 13, 2020 - 11:16am

JOB BENCHMARK # 200 CHISELED "+" IN CONCRETE LOADING PAD ELEV 831.60
JOB BENCHMARK # 201 CHISELED "+" ON CONCRETE PAD. NE QUADRANT ELEV 833.24
TRAVERSE POINT # 100 N 265778.52 E 13292183.05 ELEV 831.60
TRAVERSE POINT # 101 N 265466.51 E 13292142.46 ELEV 830.14

BENCHMARK ELEVATIONS NOTE:
BENCHMARK ELEVATIONS SHOWN ON THESE PLANS ARE BASED ON NAVD88 DATUM.

RESTORATION NOTES

1. RESTORATION OF UNPAVED DISTURBED AREAS SHALL BE WITH A MINIMUM OF 4" OF TOPSOIL, SEED AND MULCH OR HYDROSEED AT THE CONCLUSION OF THE WORK.
2. RESTORATION OF POND DISTURBED AREAS SHALL BE TO THE PRE-CONSTRUCTION CONDITIONS.

LEGAL DESCRIPTION:

UNITS 16–19 OF "OXFORD COMMERCE PARK", LOCATED IN THE NE 1/4 OF SECTION 17, T.3S., R.6E., PITTSFIELD TOWNSHIP, WASHTENAW COUNTY, MICHIGAN, AS RECORDED IN LIBER 4475, PAGE 514, W.C.R.

NAME AND DISTANCE TO NEAREST LAKE, STREAM, OR DRAIN:
1,200 FT TO MALLEST CREEK - AIRPORT BRANCH.

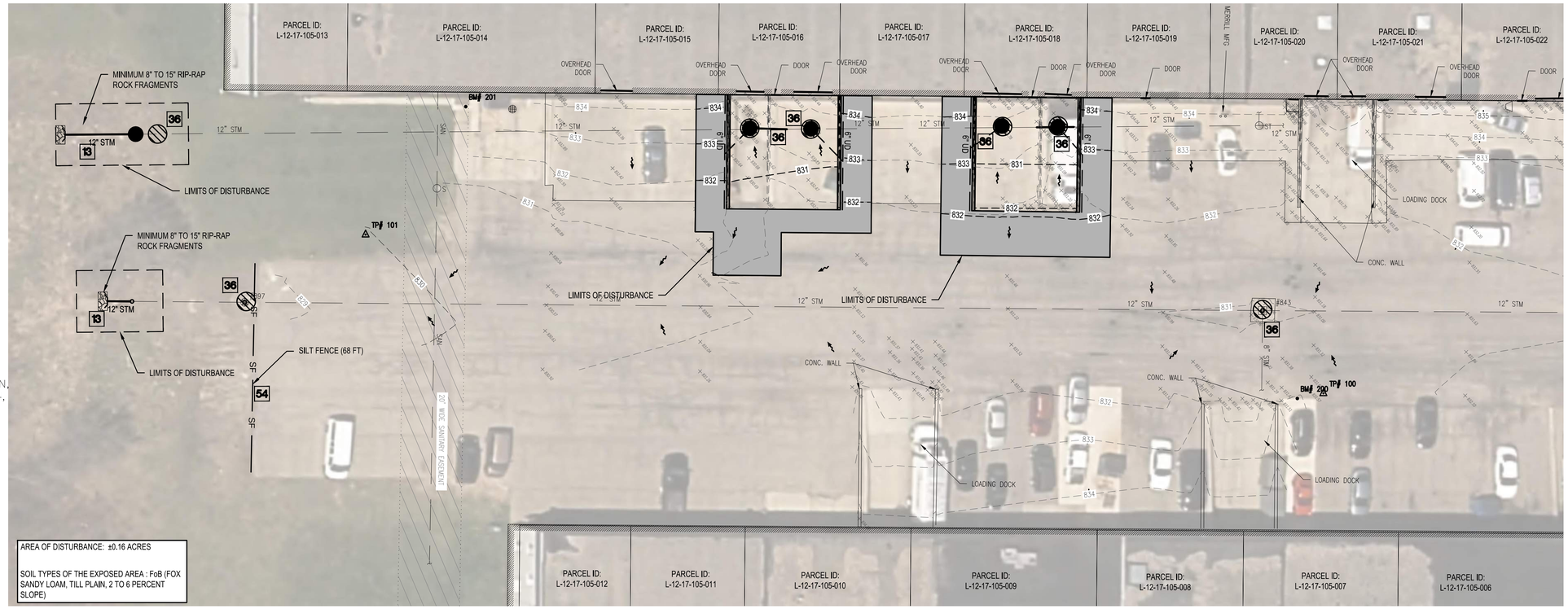

SOIL EROSION AND SEDIMENTATION CONTROL MEASURES OPINION OF PROBABLE COST

DESCRIPTION	EST. QUANTITY	UNIT	UNIT PRICE	AMOUNT
EROSION CONTROL, SILT FENCE	70	FT	$ 2.00	$ 140.00
EROSION CONTROL, INLET FILTER	7	EA	$ 200.00	$ 1,400.00
EROSION CONTROL, RIRAP	10	SYD	$ 24.00	$ 240.00
			TOTAL FOR SOIL EROSION CONTROL	**$ 1,780.00**

SESC KEY NOTES/LEGEND:

13	Riprap, Rubble, Gabions	Used where vegetation is not easily established. Effective for high velocities or high concentrations. Permits runoff to infiltrate soil. Dissipates energy flow at system outlets. PERMANENT MEASURE	
36	Catch Basin, Drain Inlet	Low Point Inlet Filter – Collects high velocity concentrated runoff. Use silt sack. TEMPORARY MEASURE	
54	Silt Fence	Silt Fence – Filters and detains runoff. TEMPORARY MEASURES	SF

LEGEND

12" STM	EXISTING STORM SEWER
12" STM	PROPOSED STORM SEWER
6" UD	PROPOSED UNDERDRAIN
	EXISTING SQUARE CATCH BASIN
	EXISTING ROUND CATCH BASIN
	PROPOSED STORM MANHOLE/CATCH BASIN
	PROPOSED CULVERT END SECTION
	FLOW DIRECTION
	LIMITS OF DISTURBANCE
	SANITARY SEWER EASEMENT

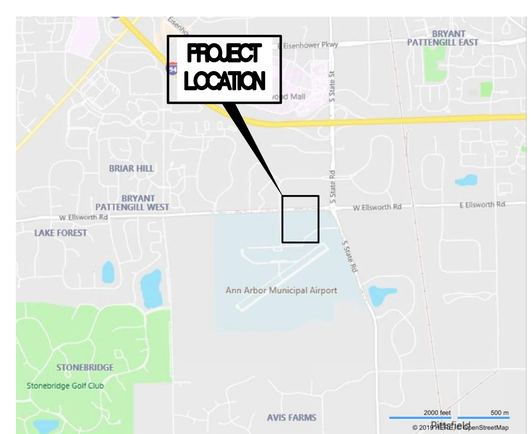

SOIL EROSION AND SEDIMENTATION CONTROL MAINTENANCE SCHEDULE

TASK	FREQUENCY	TRACKING MAT	SILT FENCE	INLET FILTERS	STORM SEWER	CB SUMPS	VEGETATION
INSPECT FOR SEDIMENT ACCUMULATION	WEEKLY	X	X	X	X	X	
REMOVE ACCUMULATED SEDIMENT	AS NEEDED		X	X	X	X	
INSPECT FOR FLOATABLES AND DEBRIS	WEEKLY				X	X	
REMOVE FLOATABLES AND DEBRIS	AS NEEDED				X	X	
INSPECT FOR PERMIT CONFORMANCE	AFTER RAIN	X	X	X			
RESTORE TO PERMIT CONFORMANCE	AS NEEDED	X	X	X			
INSPECT FOR SOIL EROSION	AFTER RAIN	X	X	X	X	X	X
RESTORE TO PREVENT EROSION	AS NEEDED	X	X	X	X	X	X
SCRAPE STREET/DRIVES	DAILY						
SWEEP STREET/DRIVES	WEEKLY						

OXFORD COMPANIES WILL BE RESPONSIBLE FOR THE MAINTENANCE OF ALL PERMANENT SOIL EROSION AND SEDIMENTATION CONTROL MEASURES UPON COMPLETION OF THE PROJECT.

GRAPHIC SCALE: FULL 0 10 20 40 60 — HALF 0 10 20 40 feet

Know what's **below.** **Call** before you dig.

OHM
ARCHITECTS ENGINEERS PLANNERS
34000 Plymouth Road
Livonia, MI 48150
P (734) 522-6711 | F (734) 522-6427
OHM-ADVISORS.COM

ISSUE: BID SET - NOT FOR CONSTRUCTION
REVISIONS:
02/14/2020 RESUBMITTED TO TOWNSHIP

DATE	PROJ NUMBER	ENG/ARCH	PROJ MGR	CADD	COUNTY	MUNICIPALITY
02/14/2020	095-19-0060	GP	GM	AGG	WASHTENAW	PITTSFIELD CHARTER TWSP

OXFORD DESIGN-BUILD LLC
UNIVERSITY OF MICHIGAN LAUNDRY DEPOT
SESC PLAN

SHEET C-111

COPYRIGHT 2019 OHM ALL DRAWINGS AND WRITTEN MATERIALS APPEARING HEREIN CONSTITUTE THE ORIGINAL AND UNPUBLISHED WORK OF OHM AND THE SAME MAY NOT BE DUPLICATED, DISTRIBUTED, OR DISCLOSED WITHOUT PRIOR WRITTEN CONSENT OF OHM

DRAWING PATH: P:\0201_0600\0561190060_UM_Laundry_Depot_AA_Airport\Drawings\Civil\Plans_Const\190020SESC.dwg Feb 13, 2020 - 11:16am

JOB BENCHMARK # 200 CHISELED "+" IN CONCRETE LOADING PAD ELEV 831.60
JOB BENCHMARK # 201 CHISELED "+" ON CONCRETE PAD. NE QUADRANT ELEV 833.24
TRAVERSE POINT # 100 N 265778.52 E 13292183.05 ELEV 831.60
TRAVERSE POINT # 101 N 265466.51 E 13292142.46 ELEV 830.14

GRAPHIC SCALE: FULL / HALF — 0, 5, 10, 20, 30 feet

BENCHMARK ELEVATIONS NOTE:
BENCHMARK ELEVATIONS SHOWN ON THESE PLANS ARE BASED ON NAVD88 DATUM.

LEGEND

- ASPHALT
- CONCRETE
- HAND RAIL

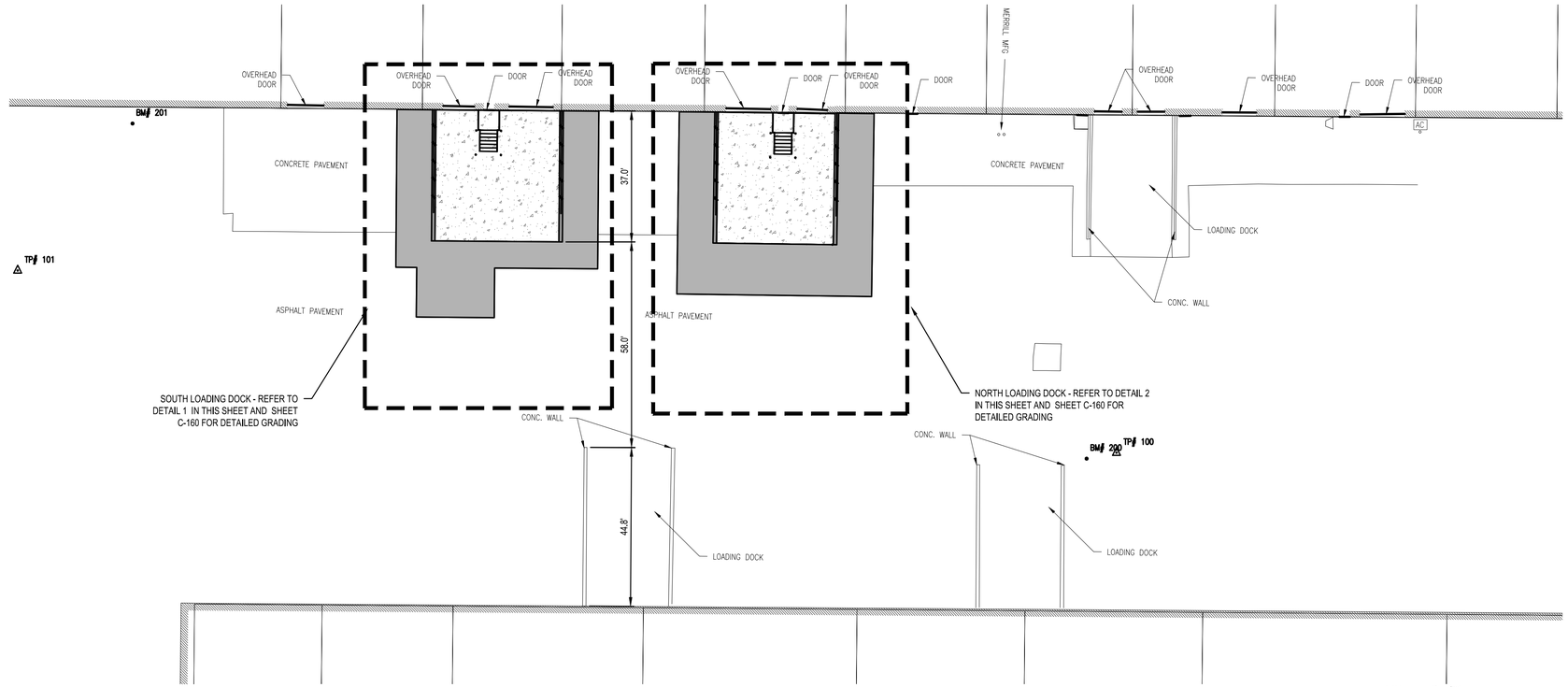

OVERALL PLAN

SCALE 1" = 20'

GRAPHIC SCALE: FULL / HALF — 0, 10, 20, 40, 60 feet

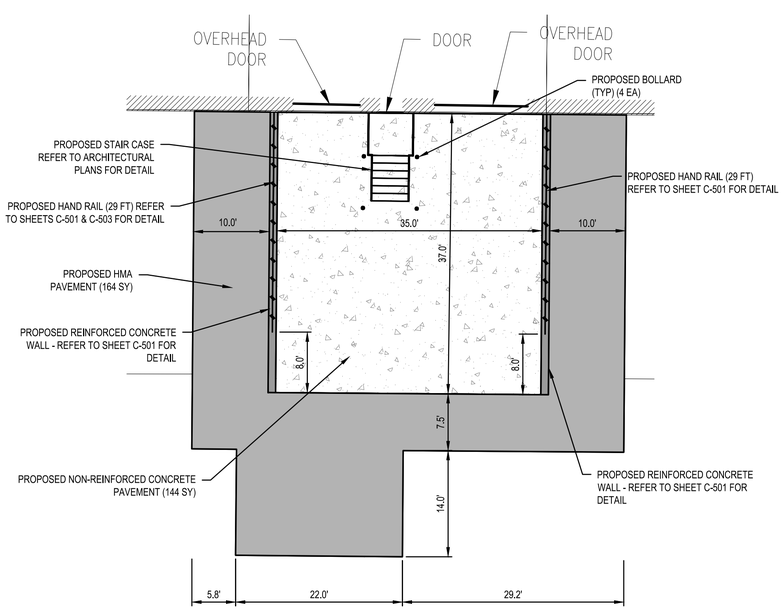

DETAIL 1 - SOUTH LOADING DOCK

SCALE 1" = 10'

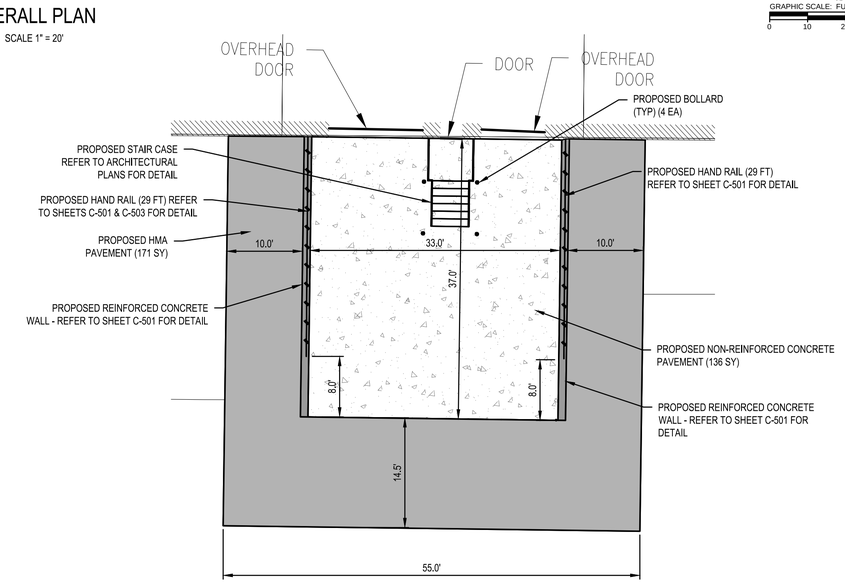

DETAIL 2 - NORTH LOADING DOCK

SCALE 1" = 10'

Know what's **below.**
Call before you dig.

OHM
ARCHITECTS ENGINEERS PLANNERS
34000 Plymouth Road
Livonia, MI 48150
P (734) 522-6711 | F (734) 522-6427
OHM-ADVISORS.COM

ISSUE: BID SET - NOT FOR CONSTRUCTION
REVISIONS:
02/14/2020 RESUBMITTED TO TOWNSHIP
--- ---
--- ---
--- ---

DATE	PROJ NUMBER	ENG/ARCH	PROJ MGR	CADD	COUNTY	MUNICIPALITY
02/14/2020	0561-19-0060	GP	GM	AGS	WASHTENAW	PITTSFIELD CHARTER TWSP

OXFORD DESIGN-BUILD LLC
UNIVERSITY OF MICHIGAN LAUNDRY DEPOT

SITE LAYOUT PLAN

SHEET C-120

COPYRIGHT 2019 OHM ALL DRAWINGS AND WRITTEN MATERIALS APPEARING HEREIN CONSTITUTE THE ORIGINAL AND UNPUBLISHED WORK OF OHM AND THE SAME MAY NOT BE DUPLICATED, DISTRIBUTED, OR DISCLOSED WITHOUT PRIOR WRITTEN CONSENT OF OHM

DRAWING PATH: P:\0201_0600\0561190060_UM_Laundry_Depot_AA_Airport\Drawings\Civil\Plans_Const\190020STE.dwg Feb 13, 2020 - 11:16am

JOB BENCHMARK # 200 CHISELED "+" IN CONCRETE LOADING PAD ELEV 831.60
JOB BENCHMARK # 201 CHISELED "+" ON CONCRETE PAD. NE QUADRANT ELEV 833.24
TRAVERSE POINT # 100 N 265778.52 E 13292183.05 ELEV 831.60
TRAVERSE POINT # 101 N 265466.51 E 13292142.46 ELEV 830.14

BENCHMARK ELEVATIONS NOTE:
BENCHMARK ELEVATIONS SHOWN ON THESE PLANS ARE BASED ON NAVD88 DATUM.

GRAPHIC SCALE: FULL / HALF — 0, 5, 10, 20, 30 feet

LEGEND

- ASPHALT
- CONCRETE
- HAND RAIL

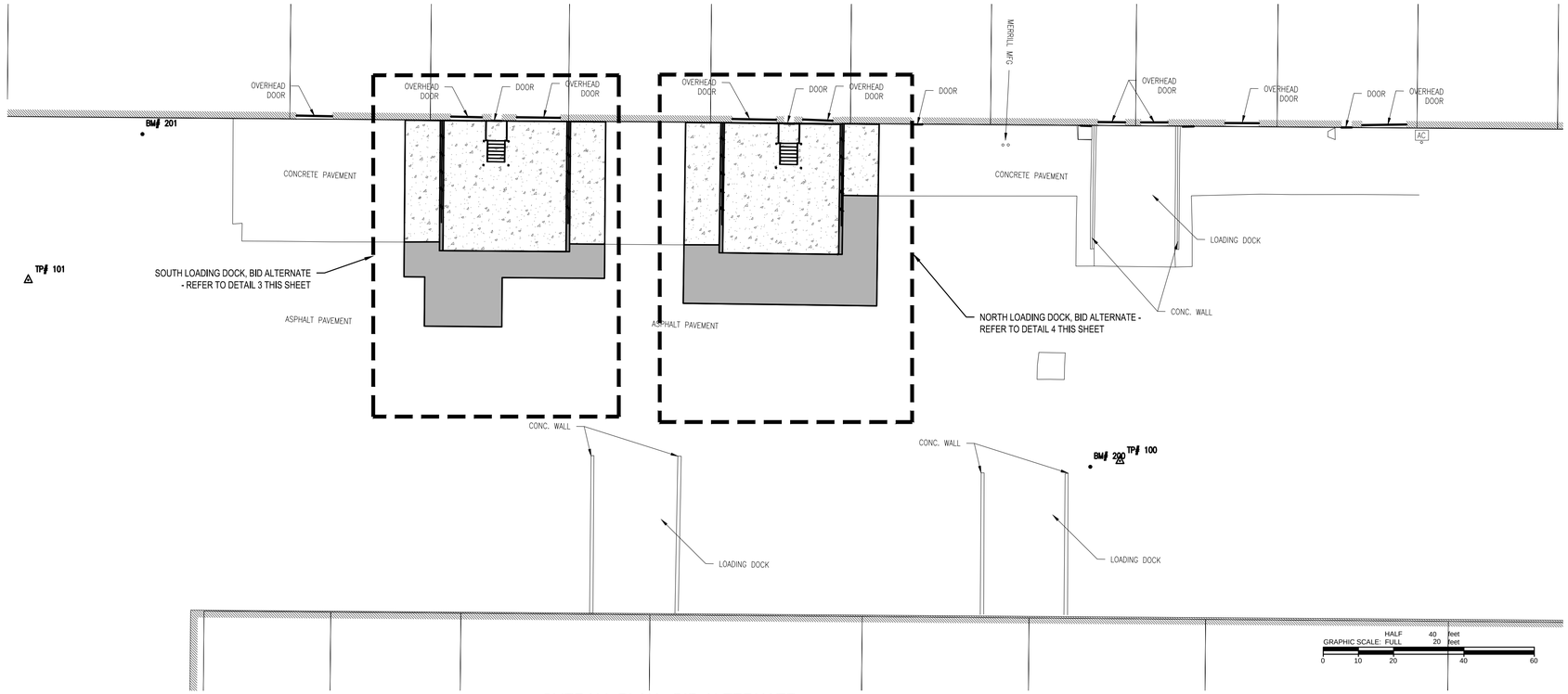

OVERALL PLAN - BID ALTERNATE

SCALE 1" = 20'

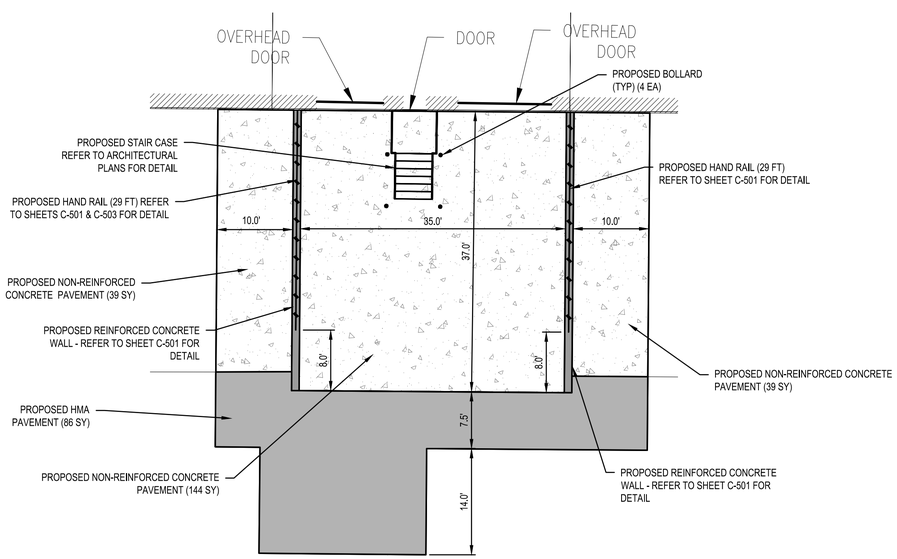

DETAIL 3 - SOUTH LOADING DOCK, BID ALTERNATE

SCALE 1" = 10'

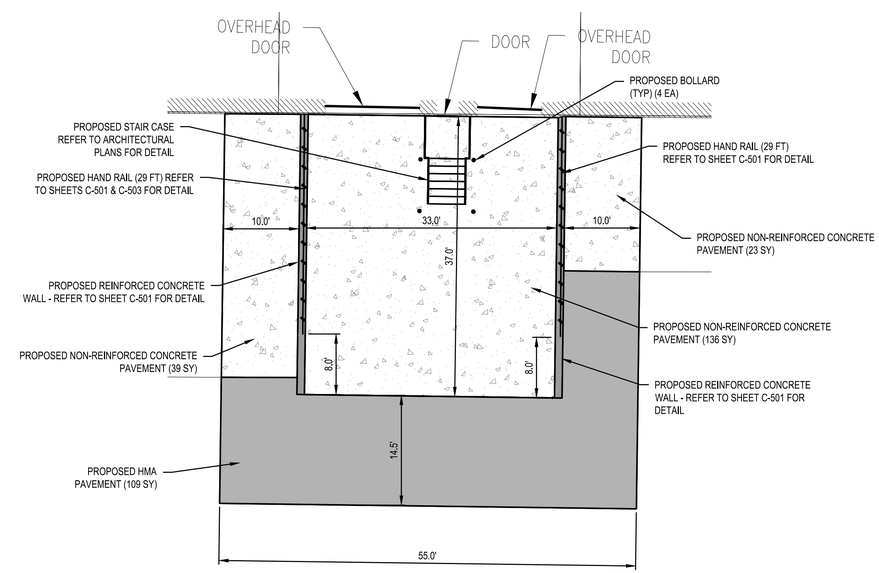

DETAIL 4 - NORTH LOADING DOCK, BID ALTERNATE

SCALE 1" = 10'

Know what's **below.**
Call before you dig.

OHM
ARCHITECTS ENGINEERS PLANNERS
34000 Plymouth Road
Livonia, MI 48150
P (734) 522-6711 | F (734) 522-6427
OHM-ADVISORS.COM

ISSUE	BID SET - NOT FOR CONSTRUCTION
REVISIONS:	
02/14/2020	RESUBMITTED TO TOWNSHIP
---	---
---	---
---	---
---	---

DATE	PROJ NUMBER	ENG/ARCH	PROJ MGR	CADD	COUNTY	MUNICIPALITY
02/14/2020	095-19-0060	GP	GM	ADG	WASHTENAW	PITTSFIELD CHARTER TWSP

OXFORD DESIGN-BUILD LLC
UNIVERSITY OF MICHIGAN LAUNDRY DEPOT

SITE LAYOUT - BID ALTERNATE

SHEET C-121

COPYRIGHT 2019 OHM ALL DRAWINGS AND WRITTEN MATERIALS APPEARING HEREIN CONSTITUTE THE ORIGINAL AND UNPUBLISHED WORK OF OHM AND THE SAME MAY NOT BE DUPLICATED, DISTRIBUTED, OR DISCLOSED WITHOUT PRIOR WRITTEN CONSENT OF OHM

DRAWING PATH: P:\0201_9600\056119006O_UM_Laundry_Depot_AA_Airport\Drawings\Civil\Plans_Const\190020ISTE.dwg Feb 13, 2020 - 11:16am

JOB BENCHMARK # 200
CHISELED "+" IN CONCRETE LOADING PAD
ELEV 831.60

JOB BENCHMARK # 201
CHISELED "+" ON CONCRETE PAD. NE QUADRANT
ELEV 833.24

TRAVERSE POINT # 100
N 265778.52
E 13292183.05 ELEV 831.60

TRAVERSE POINT # 101
N 265466.51
E 13292142.46 ELEV 830.14

GRAPHIC SCALE: HALF 20 feet, FULL 10 feet
0 5 10 20 30

BENCHMARK ELEVATIONS NOTE:
BENCHMARK ELEVATIONS SHOWN ON THESE PLANS ARE BASED ON NAVD88 DATUM.

PROPOSED STORM WATER STRUCTURES

1. EJ1040Z, TYPE M1, HEAVY DUTY & LOW PROFILE FRAME COVER
   4' DIA LOW HEAD CATCH BASIN
   T/CAST 830.32
   12" INV N 827.61 EX PIPE INVERT ELEV. FIELD VERIFY
   12" INV S 827.61 EX PIPE INVERT ELEV. FIELD VERIFY
   6" INV NE 827.84
2. EJ1040Z, TYPE M1, HEAVY DUTY & LOW PROFILE FRAME COVER
   4' DIA LOW HEAD CATCH BASIN
   T/CAST 830.32
   12" INV N 827.37 EX PIPE INVERT ELEV. FIELD VERIFY
   12" INV S 827.37 EX PIPE INVERT ELEV. FIELD VERIFY
   6" INV SE 827.82
3. EJ1040Z, TYPE M1, HEAVY DUTY & LOW PROFILE FRAME COVER
   4' DIA LOW HEAD CATCH BASIN
   T/CAST 830.30
   12" INV N 826.56 EX PIPE INVERT ELEV. FIELD VERIFY
   12" INV S 826.56 EX PIPE INVERT ELEV. FIELD VERIFY
   6" INV NE 827.81
4. EJ1040Z, TYPE M1, HEAVY DUTY & LOW PROFILE FRAME COVER
   4' DIA LOW HEAD CATCH BASIN
   T/CAST 830.29
   12" INV N 826.30 EX PIPE INVERT ELEV. FIELD VERIFY
   12" INV S 826.30 EX PIPE INVERT ELEV. FIELD VERIFY
   6" INV SE 827.81
5. EJ1040Z, TYPE B COVER COVER
   4' DIA MANHOLE
   MATCH EXISTING T/CAST
   12" INV N 823.69 EX PIPE INVERT ELEV. FIELD VERIFY
   12" INV S 820.00

LEGEND

12" STM	EXISTING STORM SEWER
12" STM	PROPOSED STORM SEWER
6" UD	PROPOSED UNDERDRAIN
●	PROPOSED STORM MANHOLE/CATCH BASIN
840 / 839	PROPOSED CONTOUR
749.25 FG	PROPOSED SPOT GRADE

ABBREVIATION KEY

EX	EXISTING
FF	FINAL FLOOR
T/	TOP OF _____
T/CAST	TOP OF CAST
T/P	TOP OF PAVEMENT
T/W	TOP OF WALL

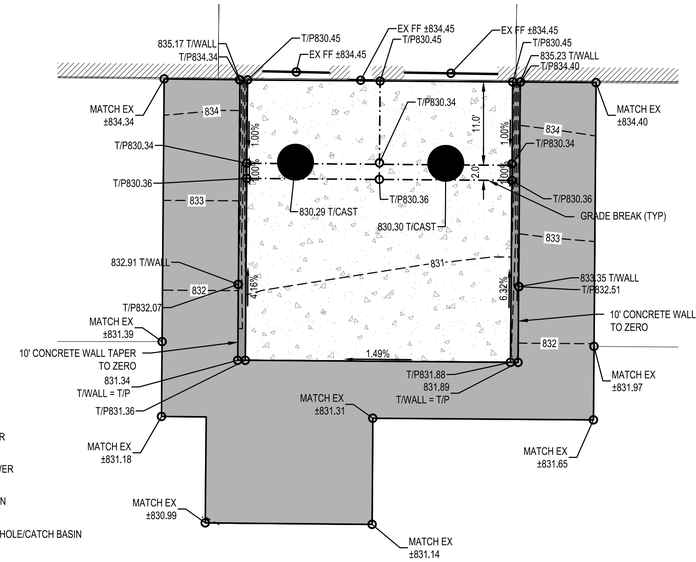

DETAIL 5 - SOUTH LOADING DOCK (DETAILED GRADING)

SCALE 1" = 10'

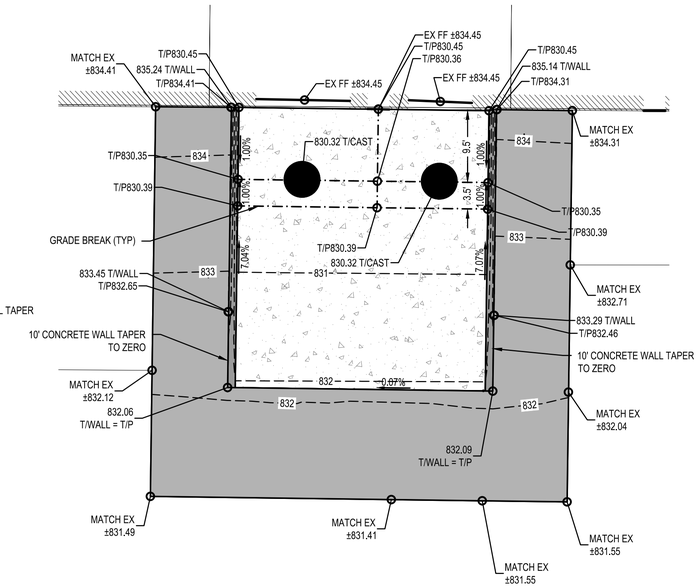

DETAIL 6 - NORTH LOADING DOCK (DETAILED GRADING)

SCALE 1" = 10'

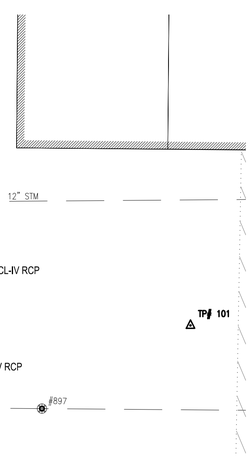

DETAIL 9 - END SECTIONS RECONSTRUCTION

SCALE 1" = 20'

GRAPHIC SCALE: HALF 40 feet, FULL 20 feet
0 5 20 40 60

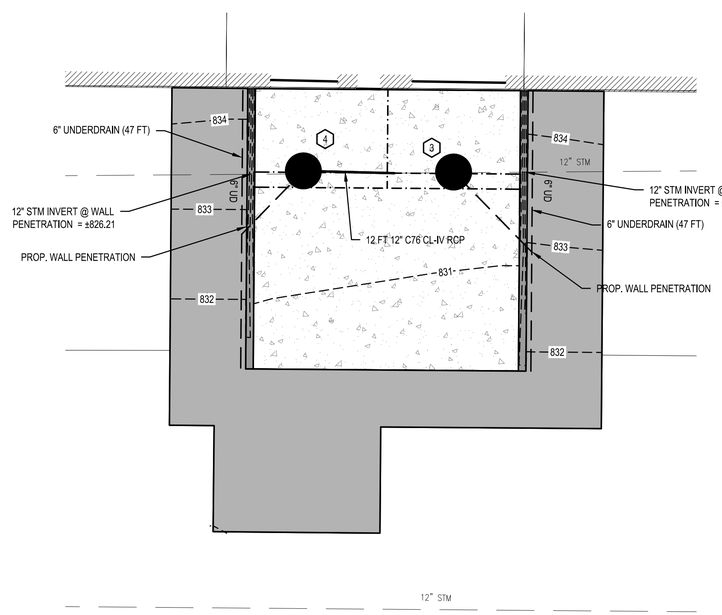

DETAIL 7 - SOUTH LOADING DOCK (STORM WATER)

SCALE 1" = 10'

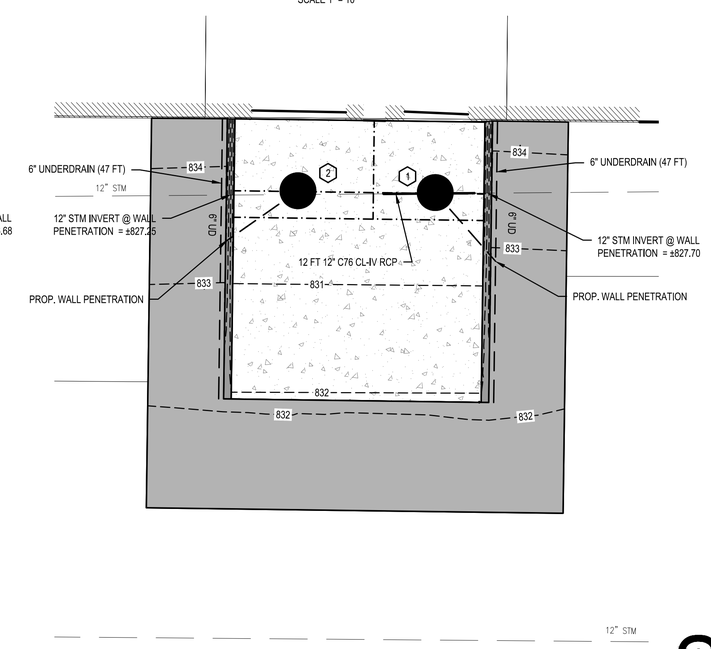

DETAIL 8 - NORTH LOADING DOCK (STORM WATER)

SCALE 1" = 10'

UTILITY LOCATION NOTES:

1. VERTICAL AND HORIZONTAL LOCATION OF EXISTING UTILITIES ARE FROM THE BEST INFORMATION AVAILABLE. EXACT LOCATION AND COMPLETENESS ARE NOT GUARANTEED. THE ENGINEER/OWNER WILL NOT BE RESPONSIBLE FOR ANY OMISSIONS OR VARIATION FORM UTILITIES SHOWN.
2. THE CONTRACTOR SHALL ASCERTAIN THE TRUE VERTICAL AND HORIZONTAL LOCATION AND SIZE OF ANY UNDERGROUND UTILITIES AND SHALL BE RESPONSIBLE FOR DAMAGE TO PUBLIC OR PRIVATE UTILITIES SHOWN OR NOT SHOWN HEREON.

Know what's **below.** **Call** before you dig.

OHM
ARCHITECTS ENGINEERS PLANNERS
34000 Plymouth Road
Livonia, MI 48150
P (734) 522-6711 | F (734) 522-6427
OHM-ADVISORS.COM

ISSUE	BID SET - NOT FOR CONSTRUCTION
REVISIONS:	
02/14/2020	RESUBMITTED TO TOWNSHIP

DATE	PROJ NUMBER	ENG/ARCH	PROJ MGR	CADD	COUNTY	MUNICIPALITY
02/14/2020	095-19-0060	GP	GM	ADG	WASHTENAW	PITTSFIELD CHARTER TWSP

OXFORD DESIGN-BUILD LLC
UNIVERSITY OF MICHIGAN LAUNDRY DEPOT
GRADING AND STORM WATER PLAN

SHEET C-160

COPYRIGHT 2019 OHM ALL DRAWINGS AND WRITTEN MATERIALS APPEARING HEREIN CONSTITUTE THE ORIGINAL AND UNPUBLISHED WORK OF OHM AND THE SAME MAY NOT BE DUPLICATED, DISTRIBUTED, OR DISCLOSED WITHOUT PRIOR WRITTEN CONSENT OF OHM

DRAWING PATH: P:\0201_\6600\0561190060_UM_Laundry_Depot_AA_Airport\Drawings\Civil\Plans_Const\190020STE.dwg Feb 13, 2020 - 11:16am

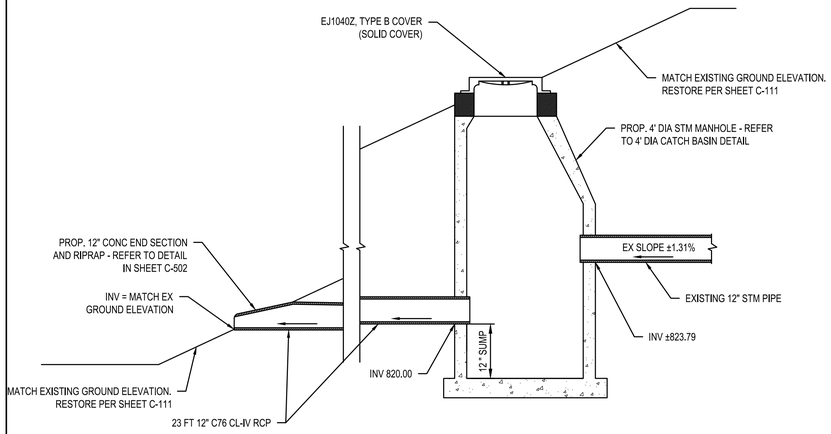

END SECTION RECONSTRUCTION

NOT TO SCALE

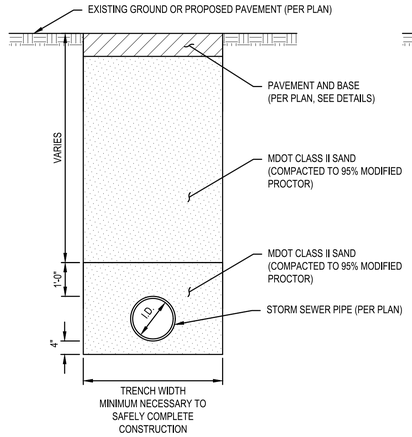

TRENCH DETAIL

(UNDER PAVEMENT SURFACE)
NOT TO SCALE

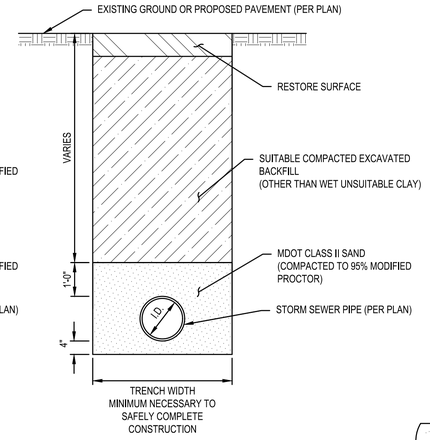

TRENCH DETAIL

(IN GREENBELT AREA OUTSIDE OF PAVEMENT INFLUENCE)
NOT TO SCALE

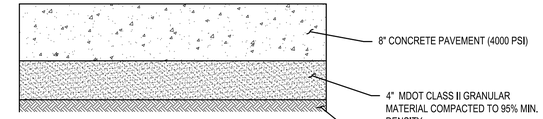

CONCRETE PAVEMENT SECTION

NOT TO SCALE

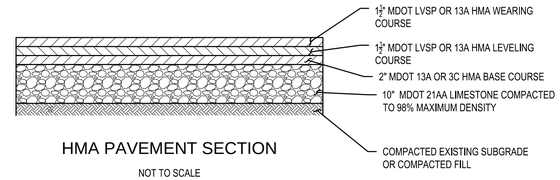

HMA PAVEMENT SECTION

NOT TO SCALE

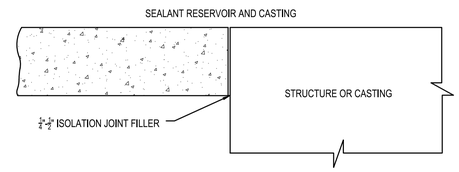

ISOLATION JOINT DETAIL

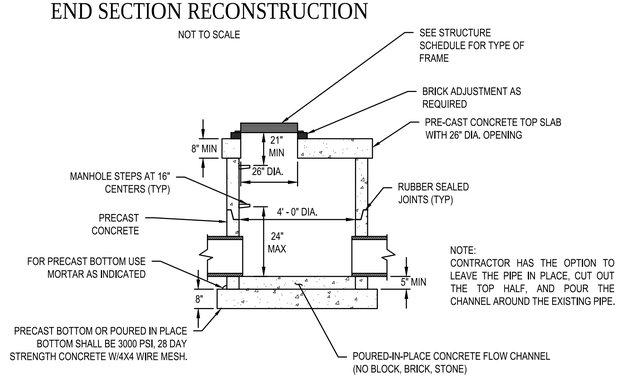

NOTE:
CONTRACTOR HAS THE OPTION TO LEAVE THE PIPE IN PLACE, CUT OUT THE TOP HALF, AND POUR THE CHANNEL AROUND THE EXISTING PIPE.

LOW HEAD CATCH BASIN DETAL

NOT TO SCALE

CONCRETE PAVEMENT CONSTRUCTION NOTES:

1. ISOLATION JOINTS SHALL BE INSTALLED AT THE INTERFACE BETWEEN BUILDING WALLS AND RETAINING WALLS. JOINTS PARALLEL OR LONGITUDINAL TO TRAFFIC SHALL BE "LONGITUDINAL JOINT" IN ACCORDANCE WITH MDOT AND DETAIL IN CIVIL DETAILS. JOINTS PERPENDICULAR OR TRANSVERSE TO TRAFFIC SHALL BE "TRANSVERSAL JOINT" IN ACCORDANCE WITH MDOT AND DETAIL IN CIVIL DETAILS.
2. JOINTS SHALL DIVIDE PAVEMENT INTO APPROXIMATELY SQUARE PANELS, MAXIMUM DISTANCE BETWEEN JOINTS SHALL BE 15' AND THE LENGTH OF THE PANEL SHALL NOT BE MORE THAN 25% GREATER THAN THE WIDTH.
3. CONTRACTOR SHALL SUBMIT, FOR ENGINEER APPROVAL, A READY MIX CONCRETE MIX DESIGN THAT SHALL ACHIEVE 4,000 PSI COMPRESSIVE STRENGTH AT OR BEFORE 28 DAYS AFTER PLACEMENT.
4. CONTRACTOR SHALL TAKE CARE TO PREVENT DAMAGE TO THE BUILDING, PAVEMENT OR CONCRETE TO REMAIN. REPAIR OR REPLACEMENT SHALL BE AT THE CONTRACTOR'S EXPENSE.
5. CONTRACTOR SHALL SUBMIT A PAVEMENT JOINT PATTERN SKETCH, WITH DIMENSIONS, FOR OWNER APPROVAL PRIOR TO EXECUTING CONCRETE WORK.

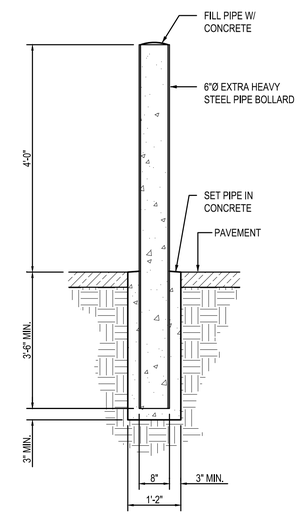

BOLLARD DETAIL

NOT TO SCALE

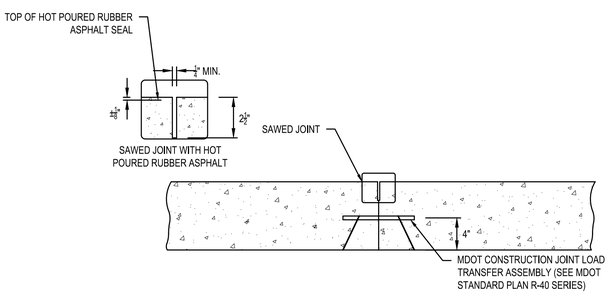

TRANSVERSAL JOINT DETAIL

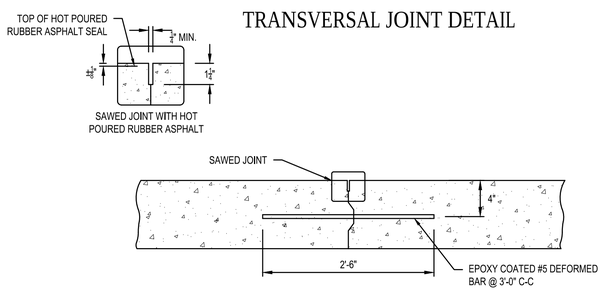

LONGITUDINAL JOINT DETAIL

OHM
ARCHITECTS ENGINEERS PLANNERS
34000 Plymouth Road
Livonia, MI 48150
P (734) 522-6711 | F (734) 522-6427
OHM-ADVISORS.COM

ISSUE: BID SET - NOT FOR CONSTRUCTION
REVISIONS:
02/14/2020 RESUBMITTED TO TOWNSHIP
--- ---
--- ---
--- ---
--- ---

DATE	PROJ NUMBER	ENGARCH	PROJ MGR	CADD	COUNTY	MUNICIPALITY
02/14/2020	0561-19-0060	GP	GM	AGG	WASHTENAW	PITTSFIELD CHARTER TWSP

OXFORD DESIGN-BUILD LLC
UNIVERSITY OF MICHIGAN LAUNDRY DEPOT

CIVIL DETAILS

SHEET C-501

COPYRIGHT 2019 OHM ALL DRAWINGS AND WRITTEN MATERIALS APPEARING HEREIN CONSTITUTE THE ORIGINAL AND UNPUBLISHED WORK OF OHM AND THE SAME MAY NOT BE DUPLICATED, DISTRIBUTED, OR DISCLOSED WITHOUT PRIOR WRITTEN CONSENT OF OHM

DRAWING PATH: P:\0201_0600\0561190060_UM_Laundry_Depot_AA_Airport\Drawings\Civil\Plans_Const\190020DET.dwg Feb 13, 2020 - 11:16am

DESIGN ASSUMPTIONS:

1. SURCHARGE LOADING: 250 PSF
2. UNIT WEIGHT OF SOILS: 120 PCF
3. FRICTION ANGLE: 30 DEGREES
4. ALLOWABLE BEARING CAPACITY: 2,500 PSF
5. FACTOR OF SAFETY ANALYSIS APPROACH FOR EXTERNAL STABILITY
6. LRFD APPROACH FOR INTERNAL STABILITY
7. REINFORCED CONCRETE DESIGN USING ACI 318-14 CODE

RETAINING WALL CONSTRUCTION NOTES:

1. VERIFY ASSUMED 2500PSF ALLOWABLE BEARING PRESSURE ON SITE. THIS INCLUDES CHECKING FOR THE PRESENCE OF WEAK SOILS (SOFT CLAY, LAKE MARL, PEAT, ETC.) AT DEPTHS OF SEVERAL FEET BELOW GRADE.
2. ALL BACKFILL AND SUBGRADE SOILS TO BE COMPACTED TO A MINIMUM OF 95% OF THE MAXIMUM DENSITY BY MODIFIED PROCTOR
3. WHERE LAPPING IS NEEDED, USE CLASS B SPLICES PER ACI 314-14 WHERE THE MINIMUM LAPPING DISTANCE IS:
   - 3.1. 32" FOR #4 HORIZONTAL BARS IN WALL;
   - 3.2. 31" FOR #5 VERTICAL BARS;
   - 3.3. 25" FOR #4 HORIZONTAL BARS IN FOOTING;
   - 3.4. 37" FOR #6 VERTICAL BARS IN WALL

1. CONTRACTOR MAY ELECT TO:
   - 1.1. STEP RETAINING WALL FOOTING DOWN AT THE EXISTING PIPE/UTILITY LOCATIONS ONLY. SEE DETAIL PERTAINING TO STEEPED FOOTING.
   - 1.2. STEP THE ENTIRE WALL SECTION DOWN SUCH THAT THE INVERT OF THE PIPE (PLUS THICKNESS) IS AT A FINAL DISTANCE OF 3 INCHES ABOVE THE PROPOSED RETAINING WALL DRAINAGE PIPE.
2. ANNULAR SPACE BETWEEN EXISTING PIPE AND NEW RETAINING WALL TO BE FILLED WITH A COMPRESSIBLE MATERIAL TO ALLOW FOR RELATIVE MOVEMENT BETWEEN THOSE ELEMENTS.
3. EXISTING PIPE TO BE PROPERLY SUPPORTED DURING RETAINING WALL CONSTRUCTION.

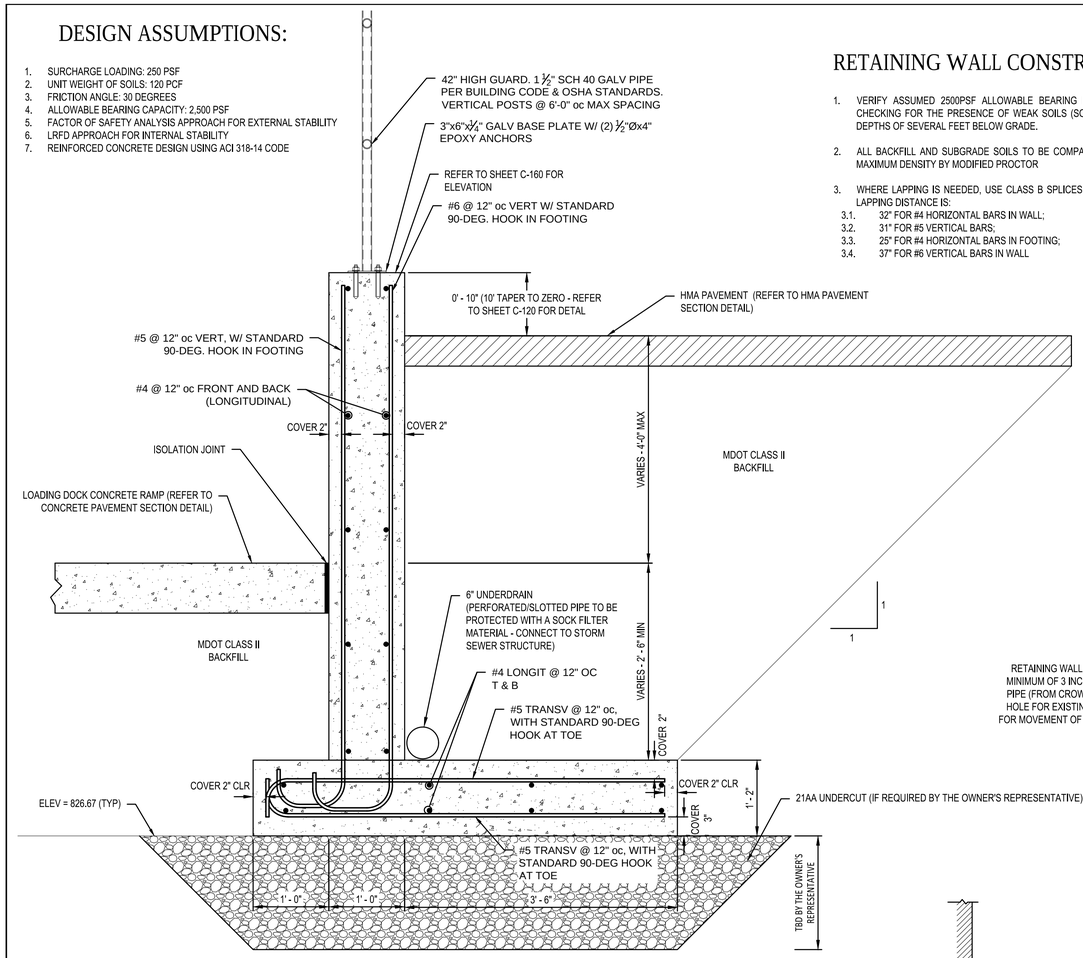

RETAINING WALL DETAIL

NOT TO SCALE

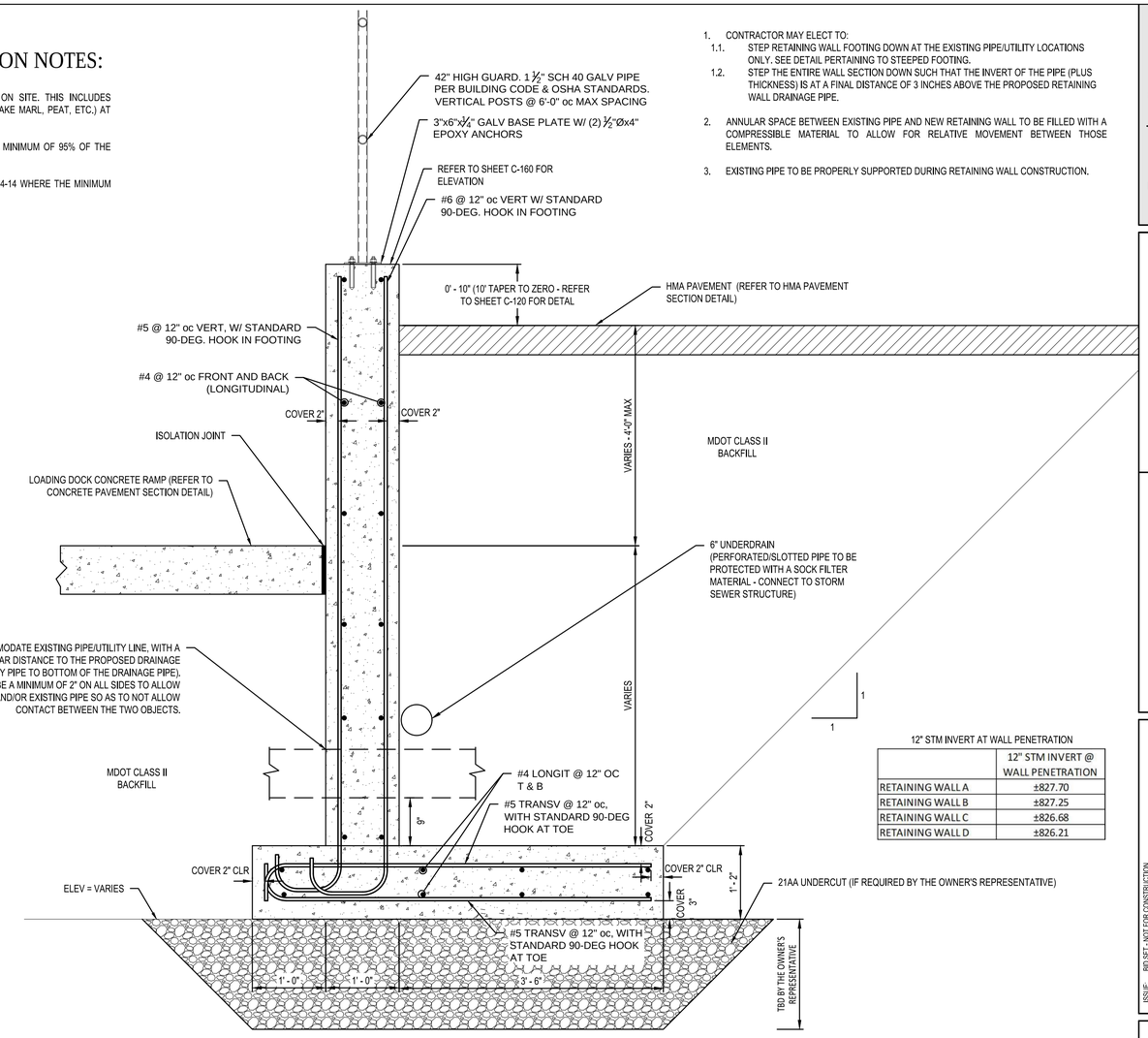

12" STM INVERT AT WALL PENETRATION

	12" STM INVERT @ WALL PENETRATION
RETAINING WALL A	±827.70
RETAINING WALL B	±827.25
RETAINING WALL C	±826.68
RETAINING WALL D	±826.21

RETAINING WALL DETAIL STM PIPE PENETRATION

NOT TO SCALE

STANDARD HOOK NOTE:

INCLUDE A STANDARD 90 DEGREE HOOK IN EACH OF THE CASES:

- 8" MINIMUM FOR #4 BARS;
- 10" MINIMUM FOR #5 BARS;
- 12" MINIMUM FOR #6 BARS

MAINTAIN THE REQUIRED CLEAR DISTANCE TO THE EDGES OF CONCRETE, AS NOTED.

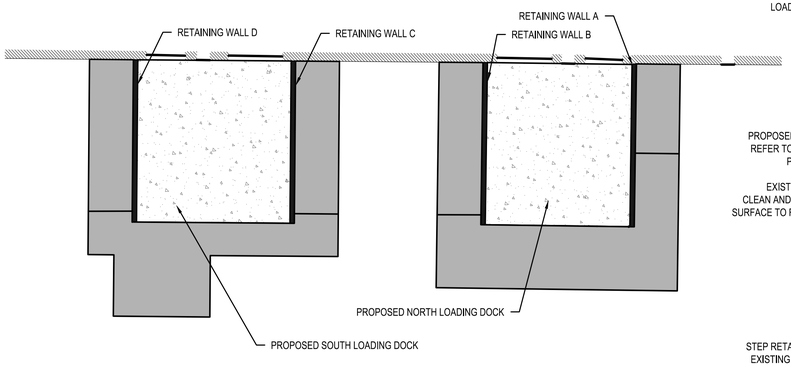

NOT TO SCALE

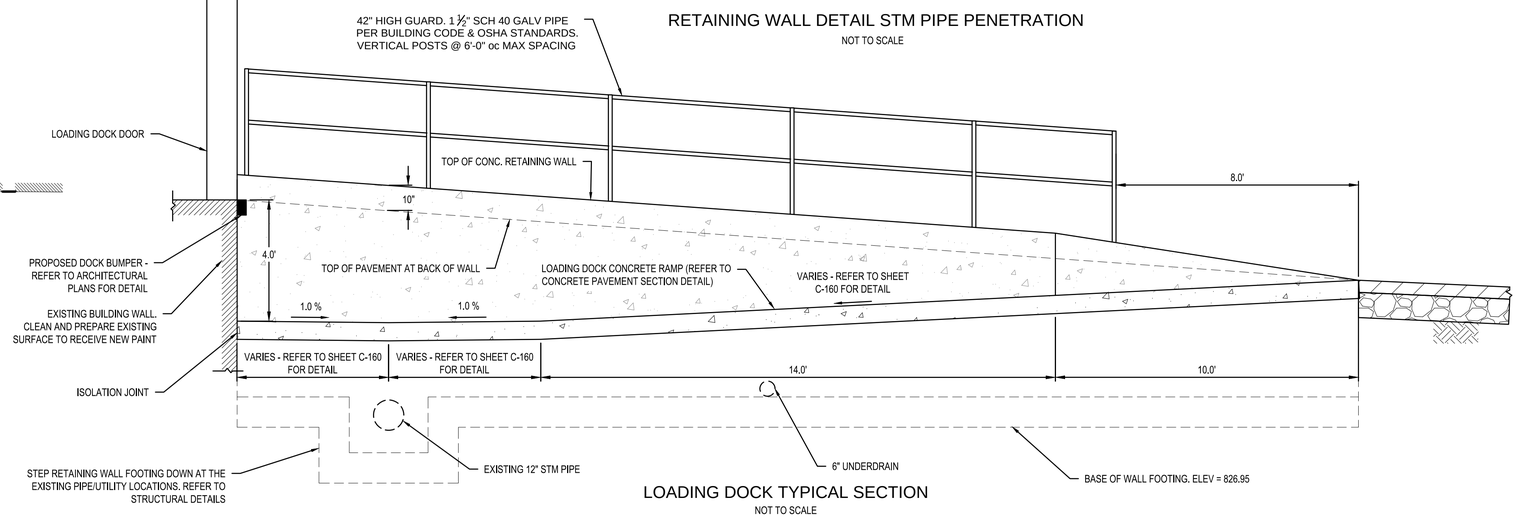

LOADING DOCK TYPICAL SECTION

NOT TO SCALE

OHM

ARCHITECTS ENGINEERS PLANNERS

34000 Plymouth Road
Livonia, MI 48150
P (734) 522-6711 | F (734) 522-6427

OHM-ADVISORS.COM

ISSUE: BID SET - NOT FOR CONSTRUCTION

REVISIONS:

02/14/2020 RESUBMITTED TO TOWNSHIP

DATE	PROJ NUMBER	ENG/ARCH	PROJ MGR	CADD	COUNTY	MUNICIPALITY
02/14/2020	0561-19-0060	GP	GM	ADG	WASHTENAW	PITTSFIELD CHARTER TWSP

OXFORD DESIGN-BUILD LLC
UNIVERSITY OF MICHIGAN LAUNDRY DEPOT

CIVIL DETAILS - RETAINING WALL DETAIL

SHEET C-502

COPYRIGHT 2019 OHM ALL DRAWINGS AND WRITTEN MATERIALS APPEARING HEREIN CONSTITUTE THE ORIGINAL AND UNPUBLISHED WORK OF OHM AND THE SAME MAY NOT BE DUPLICATED, DISTRIBUTED, OR DISCLOSED WITHOUT PRIOR WRITTEN CONSENT OF OHM

DRAWING PATH: P:\0201_0600\0561190060_UM_Laundry_Depot_AA_Airport\Drawings\Civil\Plans_Const\190020DET.dwg Feb 13, 2020 - 11:16am

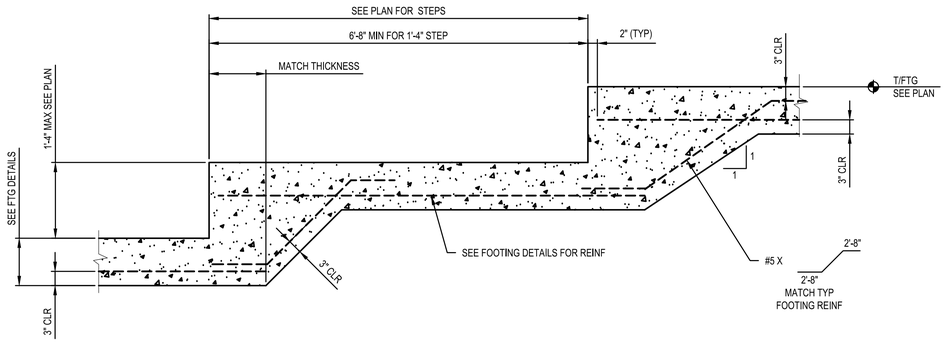

NOTE:
1. DOWELS INTO WALL NOT SHOWN

TYPICAL STEPPED FOOTING

NOT TO SCALE

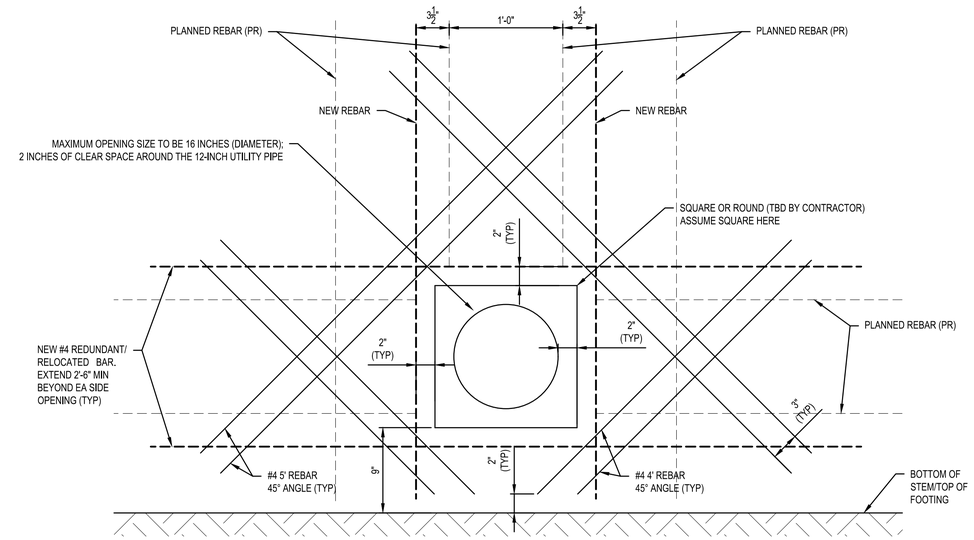

ADDITIONAL REINFORCEMENT AT OPENINGS IN WALLS

SCALE: 1-1/2" = 1'-0"

OHM
ARCHITECTS ENGINEERS PLANNERS
34000 Plymouth Road
Livonia, MI 48150
P (734) 522-6711 | F (734) 522-6427
OHM-ADVISORS.COM

ISSUE: BID SET - NOT FOR CONSTRUCTION

REVISIONS:

02/14/2020 RESUBMITTED TO TOWNSHIP

DATE	PROJ NUMBER	ENG/ARCH	PROJ MGR	CADD	COUNTY	MUNICIPALITY
02/14/2020	095-19-060	GP	GM	ADG	WASHTENAW	PITTSFIELD CHARTER TWSP

OXFORD DESIGN-BUILD LLC
UNIVERSITY OF MICHIGAN LAUNDRY DEPOT

CIVIL DETAILS - RETAINING WALL DETAIL

SHEET C-503

COPYRIGHT 2019 OHM ALL DRAWINGS AND WRITTEN MATERIALS APPEARING HEREIN CONSTITUTE THE ORIGINAL AND UNPUBLISHED WORK OF OHM AND THE SAME MAY NOT BE DUPLICATED, DISTRIBUTED, OR DISCLOSED WITHOUT PRIOR WRITTEN CONSENT OF OHM

DRAWING PATH: P:\0201_\6000\056\190060_UM_Laundry_Depot_AA_AirportDrawings\Civil\Plans_Const\190020DET.dwg Feb 13, 2020 - 11:16am

STORM SEWER AND DRAINAGE STRUCTURES

1.00 GENERAL

1.01 DESCRIPTION

A. Furnish all labor, tools, equipment and materials to construct all storm sewers, and drainage structures as herein specified. No sewers shall be accepted until the sewer system has passed the system acceptance tests.

1.02 TESTING

A. General

1. The CONTRACTOR shall furnish all equipment and personnel to conduct system acceptance tests as specified herein on all completed sewers. All tests shall be conducted under the supervision of the ENGINEER. No acceptance tests shall be conducted until the entire sewer system is constructed or just prior to placing the line in service providing the sewer pipe has been installed for not less than 30 days.

B. Test for Alignment

1. All sewers shall be laid accurately to the line and grade designed by the ENGINEER. The sewers will be tested for alignment by shining a light through the pipe at a manhole and viewing the light from an adjacent manhole. Any section of sewer in which a light cannot be seen from one manhole to the next shall be corrected to the satisfaction of the ENGINEER to pass this test.

C. Material Tests

1. The CONTRACTOR shall have tests of pipe strength made by an independent testing laboratory. Tests of up to 4 lengths of sewer pipe per hundred lengths may be required to show compliance with the Specifications. All pipe delivered to the job site shall be accompanied with a manufacturer's certificate of compliance to the Specifications.

D. Submittals

1. The CONTRACTOR shall submit shop drawings, or data sheets for all castings, steps and manholes.

2. The CONTRACTOR shall submit certification letters for all pipes. All letters must contain the following: Contractors name, project name, township name, current date, certification of pipe provided and letterhead of the certifying company.

2.00 PRODUCTS

2.01 PIPE

A. Reinforced concrete pipe and manhole tees shall be no less than the latest revision of ASTM C76, with the class designation as shown on the Plans or in the Proposal.

B. Concrete pipe shall have tongue and groove gasketed premium joints.

C. Corrugated steel pipe shall meet the requirements of AASHO M-190 for coated pipe latest revision. Minimum gage thickness shall be as shown on the Plans.

2.02 REINFORCED CONCRETE MANHOLES

A. Manholes shall conform to the current ASTM Specifications for precast reinforced concrete Manhole Sections, serial designation C478. Manhole section joints shall conform to ASTM Designation C990. All cones shall be eccentric with an offset step configuration. Concrete adjustment rings or riser rings shall not be used for adjusting the height of the structure.

B. All manhole component parts shall have the name of the manufacturer stenciled on the inside. The lettering or logo shall be a minimum of 4 inches high.

2.03 MORTAR FOR MANHOLES

A. Mortar for plastering manholes and drainage structures shall be made of one part Portland cement and two parts fine aggregate.

2.04 BRICK AND BLOCK

A. Brick for brick and mortar structures shall conform to the current ASTM Specification C32. Block for block and mortar structures shall conform to the current ASTM Specification C135.

B. The concrete block masonry used to construct manhole and catch basin walls shall be solid curved blocks with the inside and outside surfaces curved to the required radii. The blocks shall have tongue and groove or other approved type of joint at the ends so that the units interlock to form a strong, rigid structure. Curved blocks shall have the inside and outside surfaces parallel.

C. The block shall not exceed 18 inches in length or 8 inches in depth (height). No block shall be less than 6 inches in width (thickness). All blocks in one structure shall be of the same height dimension. The blocks shall be designed for length so that only full-length or half-length blocks are required to lay the circular wall of any one course.

D. Blocks intended for use in the cones or tops of manholes and catch basins shall have such shape as may be required to form the structure as shown on the Plans with inside and outside joint not to exceed 1/4-inch in thickness.

2.05 STRUCTURE FRAMES AND COVERS

A. Structures frames and covers shall weigh not less than 350 lbs. Each frame and cover shall have machined bearing surfaces and shall be suitably notched for convenient removal of the cover. Each solid manhole cover shall be marked Storm Sewer with letters integrally cast into the cover.

B. Frames and Covers shall be as follows:
1. For use on manholes: East Jordan 1040Z, with Type B cover lettered "STORM SEWER", or equal. Structures 24-inches in diameter shall have the 1045 Z frame.
2. For use on drainage structures in paved areas: East Jordan 1040Z, with Type M1 cover, with "DUMP NO WASTE" lettering and trout logo.
3. For use on drainage structures in curbed areas: East Jordan 7045 or 7065, with "DUMP NO WASTE" lettering and trout logo.
4. For use on drainage structures in landscaped areas: East Jordan 1040Z, with 1040 N 7", with "DUMP NO WASTE" lettering and trout logo.

C. All frames and covers shall be coated by the manufacturer with coal tar pitch varnish or other asphaltum coating reviewed by the ENGINEER.

D. All covers for drainage structures shall have storm drain markers affixed to the nearest available flat surface. The storm drain markers shall be manufactured by Das Manufacturing and shall be #SDR "No Dumping. Drains to River." The storm drain markers shall be installed per the manufacturer's recommendations.

2.06 MANHOLE STEPS

A. Steps shall be plastic coated steel. They shall be M.A. Industries PS1-PF for precast manholes, PS1-B for block manholes, or equal.

2.07 DRAINAGE STRUCTURES

A. All manholes and catch basins shall be precast unless otherwise specified.

B. Manhole and catch basin bottoms shall be concrete and top of slab shall have a troweled finish.

C. Upon approval by the ENGINEER, the manhole and catch basin walls may be constructed of concrete block masonry or concrete manhole pipe conforming to the requirements of the specifications previously listed. Construction shall be in accordance with the details for Catch Basin and Storm Sewer Manhole shown on the Plans.

D. A plaster coat of mortar 1/2-inch in thickness shall be applied to the inside and outside surface of all manholes and catch basins constructed with concrete block masonry or sewer brick. The inside coat of mortar shall be applied in a smooth, neat workmanlike manner.

E. Final adjustment of the top of manholes and catch basins, so that the manhole or catch basin cover is at finished elevations as shown on the Plans or meets the finished surface, may be accomplished with sewer brick conforming to the previously listed Specifications. The total height of brick for this purpose shall not exceed 9 inches. The total chimney height shall not exceed 18 inches.

F. All block and brick masonry units shall be laid in a full bed of mortar. The inside joints of the block masonry construction shall be tooled in a neat and workmanlike manner.

3.00 EXECUTION

3.01 EXCAVATION AND BACKFILL

A. All excavation and backfill 12 inches above the crown of pipe shall conform to Section 2.04, Earthwork of these specifications.

B. The trench shall be backfilled closely behind the pipe laying. Unless otherwise directed or permitted by the ENGINEER, the backfilling shall follow and be completed to the top of the trench within four pipe lengths behind pipe laying.

3.02 BEDDING

A. Concrete pipe shall be laid on a compacted granular material placed on the bottom of the trench to a depth of not less than 4 inches. Where indicated on the Plans or required by the ENGINEER, concrete encasement or cradle shall be used.

B. For all pipes, compacted aggregate material shall be placed at the sides of the pipe in 12-inch lifts and cover not less than 12 inches above the crown of the pipe.

C. "Granular Material" shall be MDOT class II, placed in not more than 6-inch layers and compacted to not less than 90% standard density.

3.03 PIPE INSTALLATION

A. All pipe shall be laid true to the required lines and grades. All trenches when pipe laying is in progress, shall be kept dry, and all pipes and fittings shall be uniformly supported on a properly trimmed bedding with holes at each joint to receive bells. All pipe shall be laid with bells uphill.

B. The grade as shown on the profiles is that of the pipe invert and that to which the work must conform. The grade shall be kept by laser or other tools which shall be furnished by the CONTRACTOR at his expense. Each pipe shall be laid accurately to the line and grade as shown on the Plans and in such manner as to form a close concentric joint with the adjoining pipe and prevent sudden offsets of the invert. The interior of sewers shall, as the work progresses, be cleaned of all dirt, cement, debris and other superfluous materials of every description. Bulkheads shall be used to keep foreign materials out of the open end of the sewer when work is not in progress.

C. The location of the piping as shown on the Plans has been determined to avoid, insofar as possible, interference with trees or structures or fixtures above ground and other underground mains, services, utilities or structures. Any change in location or alignment of piping, which may be found more feasible or practicable as the work progresses, shall be made by the CONTRACTOR, as the ENGINEER may direct.

D. All pipe shall be carefully lowered and moved into position in trench or vault in a controlled manner such as will prevent damage to the pipe and any coatings or lining. An excessive amount of scratching on the surface of the concrete pipe will be considered cause for rejection.

E. All cutting of the pipe shall be done in a neat workmanlike manner with the least amount of waste and without damage to existing or new lines. A fine toothsaw, tubing cutter or similar tool may be used to cut concrete pipe. Cuts must be square. Ragged edges shall be removed with a cutting tool or file.

F. Breaks in pipe or joints shall be repaired to the satisfaction of the ENGINEER and at the expense of the CONTRACTOR.

3.04 CONNECTIONS TO EXISTING MANHOLES

A. When a sewer is connected to an existing manhole, a hole adequate to receive the new pipe shall be cored into the manhole.

B. If the existing manhole is of brick construction, a single rowlock of brick shall be turned over the new pipe and the existing manhole brick work shall be cleaned, pointed and given a 1/2-inch mortar coat on the outside surface.

C. For connections to existing precast reinforced concrete manholes, a hole shall be cored into the concrete manhole wall to receive the pipe. Reinforcing steel shall not be cut out shall be bent and replaced in the area that is to be patched. A form shall be constructed over the area of pipe penetration. The formed area shall then be filled with concrete.

D. Closure of the manhole wall shall be made watertight using concrete.

3.05 ANIMAL GRATES

A. Animal grates shall be required on all endsections greater than 12-inch diameter.

PCT February 2008

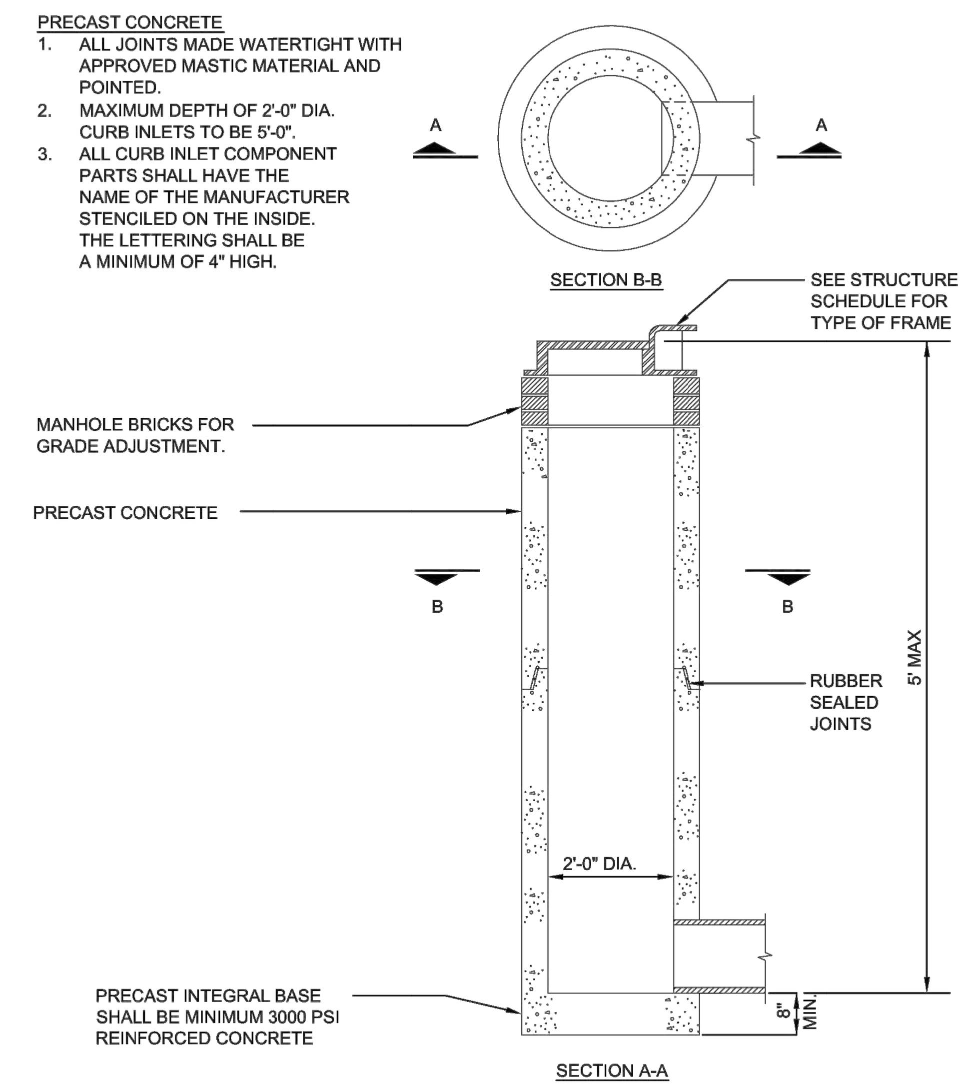

2' DIAMETER INLET

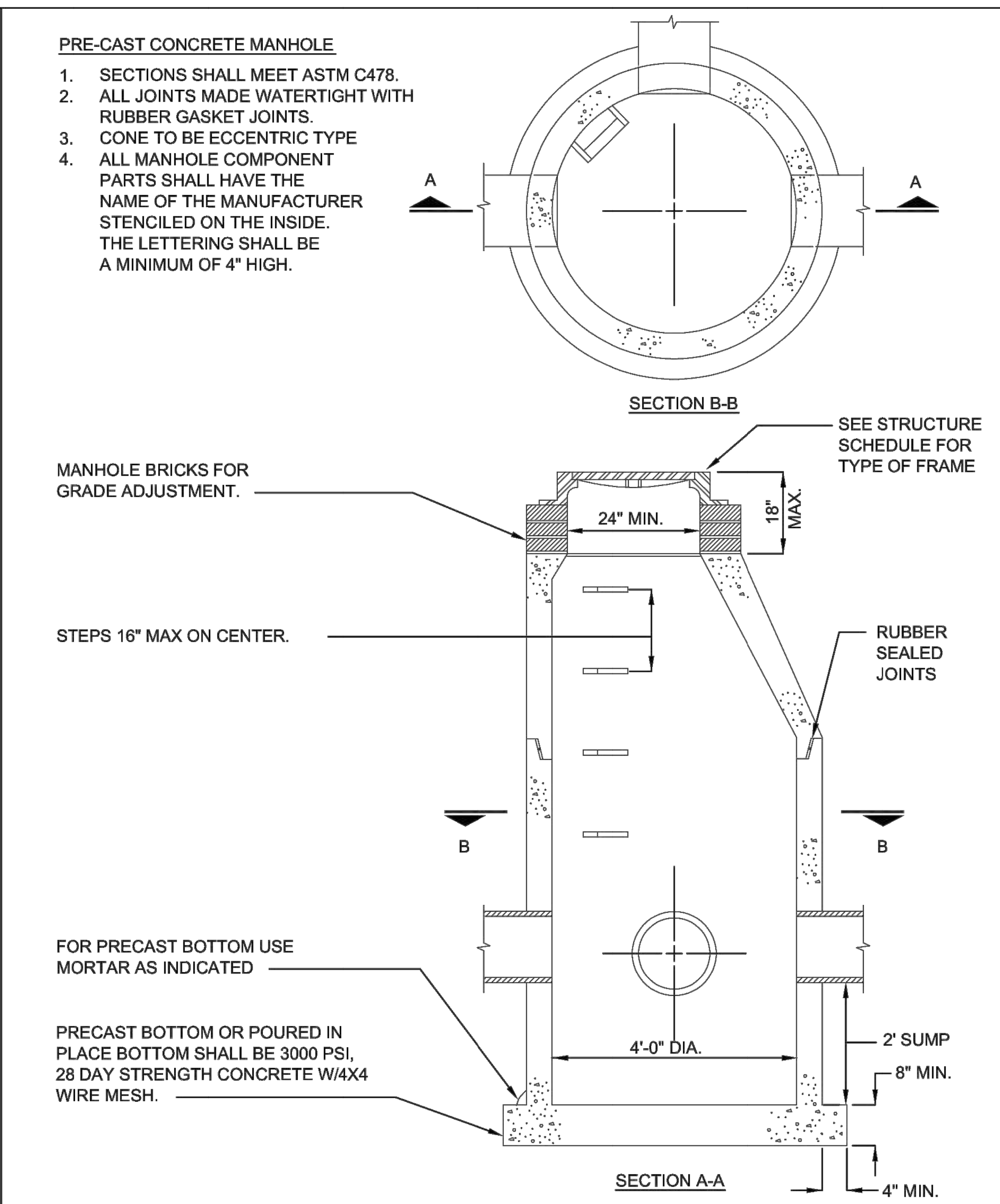

4' DIAMETER CATCH BASIN

AFFIX TO SURFACE ON OR NEAR ALL DRAINAGE COVERS.

STORM DRAIN MARKER

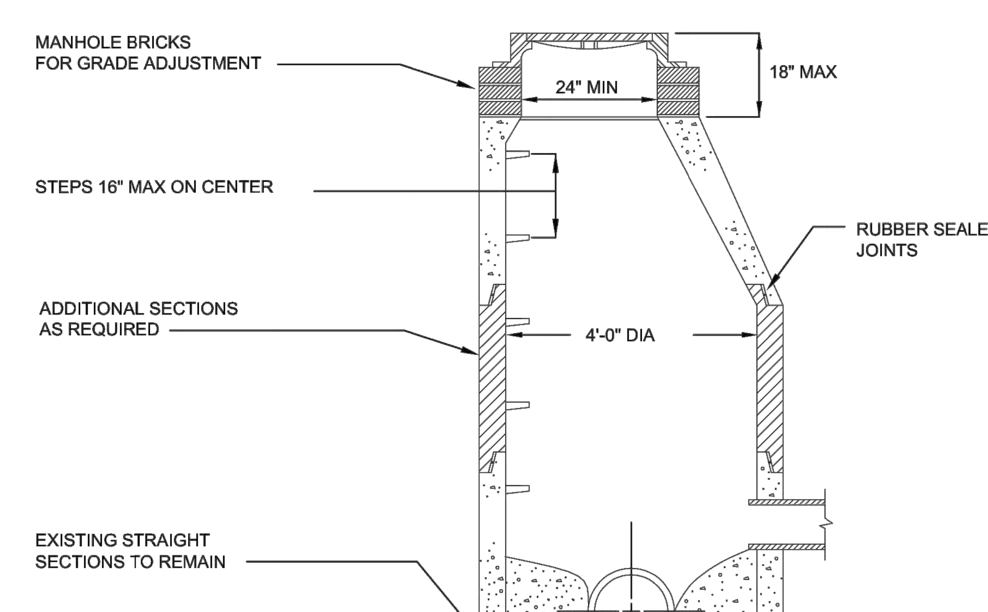

NOTES:
1. SECTIONS SHALL MEET ASTM C478.
2. ALL JOINTS MADE WATERTIGHT WITH RUBBER GASKET JOINTS
3. REMOVE CONE, ADD STRAIGHT SECTIONS AS REQUIRED AND REPLACE CONE
4. ADD MANHOLE STEPS AS NECESSARY
5. ADD ADJUSTMENT RINGS FOR RIM GRADE ADJUSTMENT

MANHOLE & CATCH BASIN RECONSTRUCTION DETAIL

PRE-CAST CONCRETE MANHOLE
1. SECTIONS SHALL MEET ASTM C478.
2. ALL JOINTS MADE WATERTIGHT WITH RUBBER GASKET JOINTS
3. CONE TO BE ECCENTRIC TYPE
4. ALL MANHOLE COMPONENT PARTS SHALL HAVE THE NAME OF THE MANUFACTURER STENCILED ON THE INSIDE. THE LETTERING SHALL BE A MINIMUM OF 4" HIGH.

PIPE SIZE	MANHOLE DIAMETER
12"-24"	4'-0" MIN.
30"-36"	5'-0" MIN.
42"-48"	6'-0" MIN

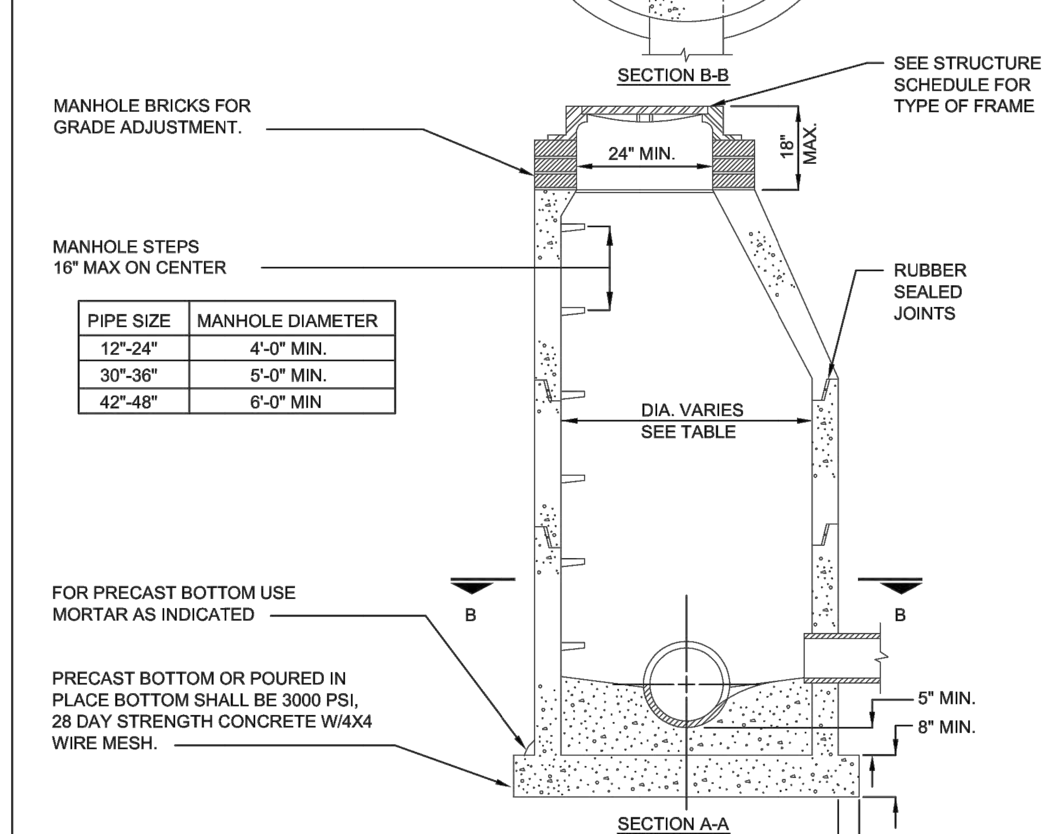

STORM SEWER MANHOLE

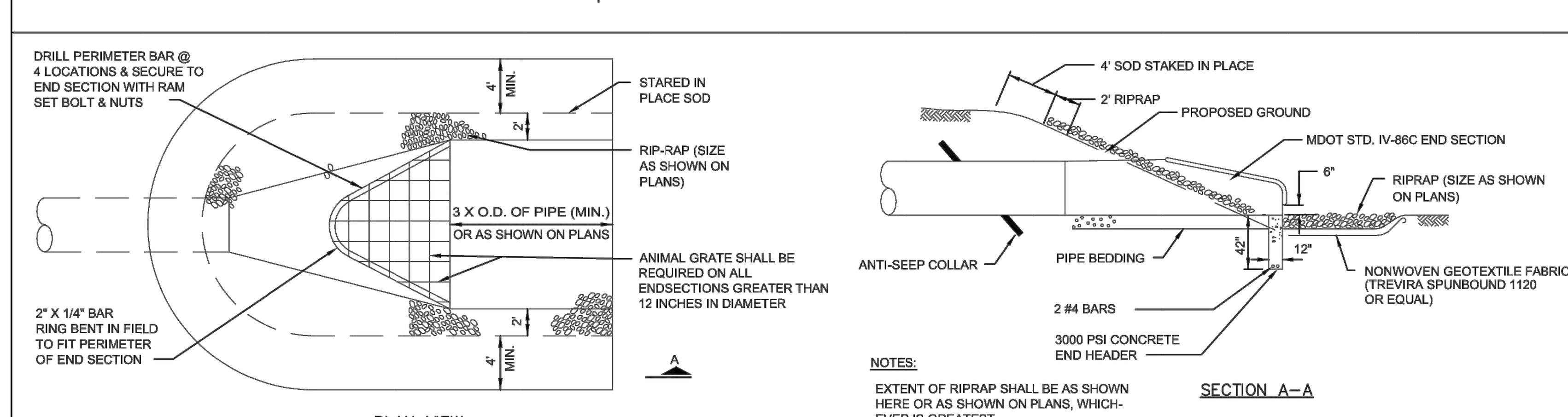

NOTES:
EXTENT OF RIPRAP SHALL BE AS SHOWN HERE OR AS SHOWN ON PLANS, WHICH-EVER IS GREATEST.

END SECTION AND RIPRAP DETAIL

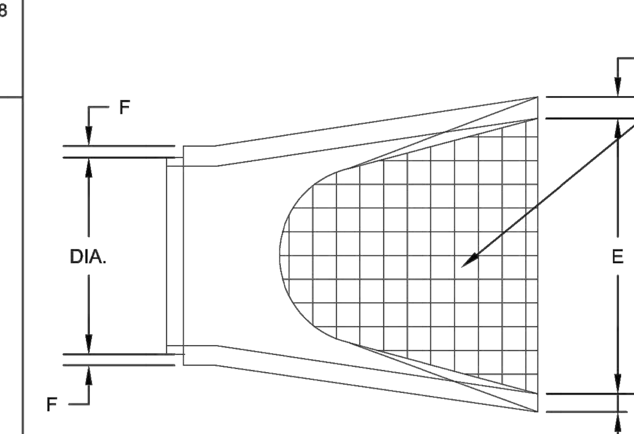

DIA	A	B	C	D	E	F	G
12"	5"	13"	45.5"	72"	24"	2"	2"
15"	7"	16"	43.5"	72"	30"	2.25"	2.25"
18"	11"	19"	41.5"	72"	36"	2.5"	2.5"
24"	12"	25"	29"	72"	48"	3"	2"
30"	14"	31"	19"	72"	60"	3.5"	3.5"
36"	17"	37"	34.5"	96"	72"	4"	4"
42"	22"	43"	32.5"	96"	78"	4.5"	4.5"
48"	24"	49"	23.5"	96"	84"	5"	5"

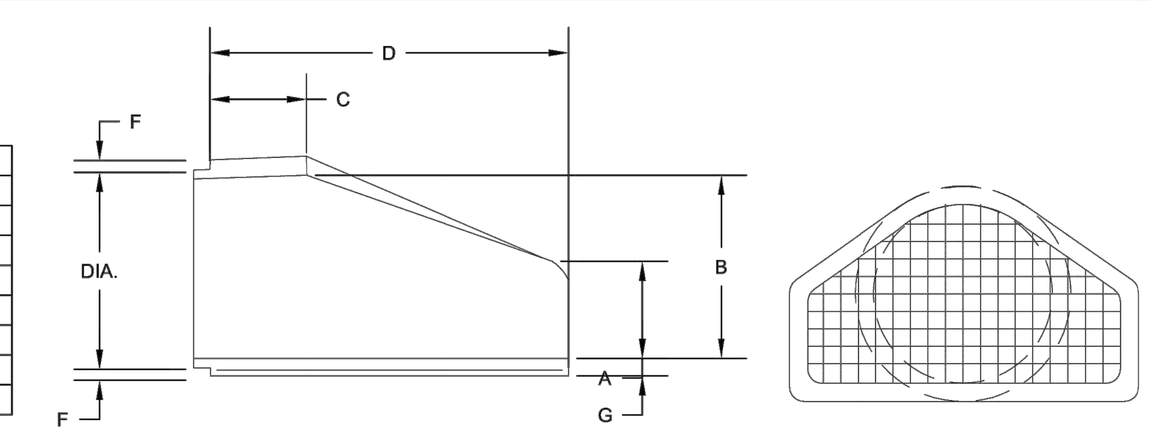

NOTE:
FLARED END SECTIONS SHALL BE MANUFACTURED TO THE CLASS SPECIFICATIONS AS THE PIPE ITSELF.

STANDARD END SECTIONS FOR PRECAST CONCRETE

OHM
ARCHITECTS ENGINEERS PLANNERS
34000 Plymouth Road
Livonia, MI 48150
P (734) 522-6711 | F (734) 522-6427
OHM-ADVISORS.COM

PITTSFIELD CHARTER TOWNSHIP
Pittsfield Charter Township
6201 W. Michigan Ave.
Ann Arbor, MI 48108–9721
48108–9721
Tel. 734.822.3101
www.pittsfield–mi.gov

UPDATES	MRH	DRW	14.01.24
TWP REV	BWA	DRW	12.08.09
TWP REV	BWA	DRW	11.04.27
UPDATES	BWA	DRW	10.10.25
UPDATES	TTN	DRW	10.01.20
Revision	By	Appd.	YY.MM.DD
Issued	By	Appd.	YY.MM.DD

File Name: ST–01	TTN	DRW	DRW	07.10.01
	Dwn.	Chkd.	Dsgn.	YY.MM.DD

Permit-Seal

Client/Project
PITTSFIELD TOWNSHIP

Pittsfield Township, Michigan

Title
STORM SEWER DETAILS AND SPECIFICATIONS

Project No. 2075001300
Scale **NOT TO SCALE**
Revision

ISSUE: BID SET - NOT FOR CONSTRUCTION
REVISIONS:
02/14/2020 RESUBMITTED TO TOWNSHIP

DATE	PROJ NUMBER	ENG/ARCH	PROJ MGR	CADD	COUNTY	MUNICIPALITY
02/14/2020	0561-19-0060	OP	GM	ADG	WASHTENAW	PITTSFIELD CHARTER TWSP

OXFORD DESIGN-BUILD LLC
UNIVERSITY OF MICHIGAN LAUNDRY DEPOT
PITTSFIELD TOWNSHIP STORM SEWER DETAILS

SHEET C-504

COPYRIGHT 2019 OHM ALL DRAWINGS AND WRITTEN MATERIALS APPEARING HEREIN CONSTITUTE THE ORIGINAL AND UNPUBLISHED WORK OF OHM AND THE SAME MAY NOT BE DUPLICATED, DISTRIBUTED, OR DISCLOSED WITHOUT PRIOR WRITTEN CONSENT OF OHM

DRAWING PATH: P:\0201_0600\0561190060_UM_Laundry_Depot_AA_Airport\Drawings\Civil\Plans_Const\190020DET.dwg Feb 13, 2020 - 11:17am

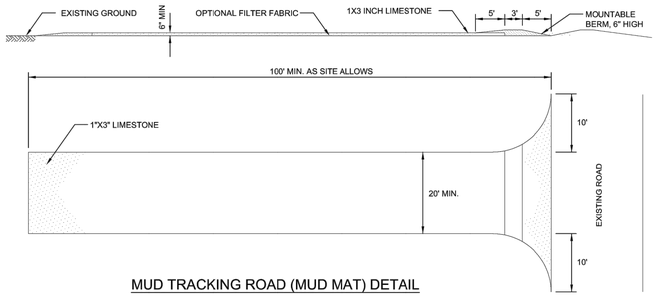

MUD TRACKING ROAD (MUD MAT) DETAIL

PITTSFIELD CHARTER TOWNSHIP
SOIL EROSION AND SEDIMENTATION CONTROL NOTES

GENERAL

1. The contractor shall implement and maintain the soil erosion control measures as shown on the plans at all times during construction on this project. Any modifications or additions to the soil erosion control measures due to construction or changed conditions, shall be complied with as required or directed by the owner, project engineer or Pittsfield Township.
2. All soil erosion and sedimentation control work shall conform to the permit requirements of Pittsfield Township and the laws of the State of Michigan.
3. A NPDES construction activity permit is required for all sites greater than 5 acres.
4. Daily inspections shall be made by the contractor. Periodic inspections may be made by the owner/project engineer/Township to determine the effectiveness of erosion and sedimentation control measures. Any necessary corrections shall be made without delay.
5. Erosion and sedimentation from work on the site shall be contained on the site and not be allowed to collect on any off-site areas or in waterways.
6. All mud/dirt tracked onto roads from the site due to construction, shall be promptly removed by the contractor.
7. Restoration of all disturbed areas, including placement of topsoil, seed, fertilizer and mulch and/or sod shall be done within 5 days of the completion of final grade.
8. Construction operations shall be scheduled and performed so that preventative soil erosion control measures are in place prior to excavation in critical areas and temporary stabilization measures are in place immediately following backfilling operations.
9. Special precautions will be taken in the use of construction equipment to prevent situations that promote erosion.
10. Proper dust control shall be maintained during construction by use of water trucks and/or chloride as required.
11. The contractor shall be responsible for maintaining all temporary soil erosion control measures and removal of some upon authorized completion of project. Completion of project will not be authorized until all site work, home building, road work and utility construction is complete and all soils are stabilized.
12. The contractor shall not grade in existing wetland or conservation areas to be protected. Silt fence shall be installed and maintained adjacent to existing wetland and conservation areas to prevent grading, erosion and sedimentation into them.
13. Tree protection fencing must remain intact until restoration of the site is complete.

SEQUENCE OF CONSTRUCTION

1. Install sediment fence and tree protection fencing prior to any grading operation.
2. Install mud-tracking pad.
3. Construct temporary sediment/detention basin.
4. Place topsoil, fertilizer, seed and mulch over the entire detention basin area.
5. Rough grade site, stockpile topsoil and begin building construction.
6. Install storm drainage system including riprap and parking lot inlet filters and detention basin standpipe.
7. Maintain erosion and sedimentation control measures, as required.
8. Install sanitary sewer and water systems.
9. Bring pavement areas to sub-base grade, place sub-base and bituminous pavement.
10. Install franchised utilities.
11. Finish grade, redistribute topsoil, seed and mulch all disturbed areas.
12. Remove any accumulated sediment within the detention basin and replace clean washed stone around standpipe.
13. Complete construction of site.
14. Insure all soil is stabilized. Remove all temporary soil erosion control measures.

SEEDING/SOD

1. Seed or sod in accordance with project specifications.
2. All areas of disturbed earth that are not to be paved or sodded shall have 4 inches of topsoil, seed, fertilizer and mulch.
3. Immediately after seeding, mulch all seeded areas with unweathered small grain straw (preferably wheat) or hay spread. Spread uniformly at the rate of 1 ½ to 2 tons or 100 pounds (2 to 3 bales) per 1,000 square foot. This mulch should be anchored with a disc-type mulch-anchoring tool.
4. Any disturbed area not paved, seeded or mulched, sodded or built upon by November 15, is to be mulched in the manner as specified above, in order to provide soil erosion protection during the winter and early spring.
5. All erosion and sedimentation control prevention procedures and structures are to comply with the Standards and Specifications for soil erosion and sediment control of the Washtenaw County Soil Conservation District.
6. Drainage ditches and slopes steeper than 1:4 (25%) shall be stabilized with erosion control blankets.
7. Steep slopes that do not take upon initial seeding must be re-seeded and stabilized with erosion control blankets.
8. Where excavation has been through lawn areas, the CONTRACTOR shall restore the disturbed area by placing topsoil and seeding or sodding over the final backfill material.

CATCH BASIN/MANHOLE PROTECTION

1. Protect storm sewer catch basins with Siltsack. or approved equivalent as follows:

ROADS

1. During construction, all roads shall be protected from unvegetated areas washing onto road surfaces by placement of silt fence behind curb or a 10 foot wide straw mulch bank behind the curb or other approved method and/or as shown on the plans.
2. During construction of any portion of the project, roads shall be maintained free of dirt, silt and construction debris.

Pittsfield SEC 9/22/2009

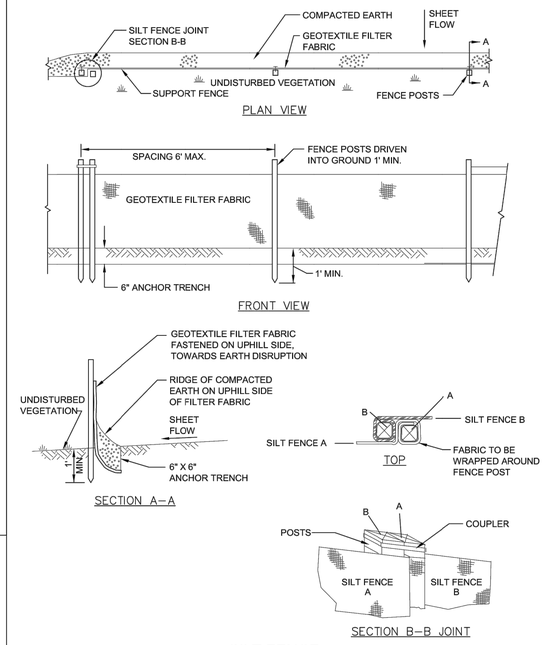

SILT FENCE
NOT TO SCALE

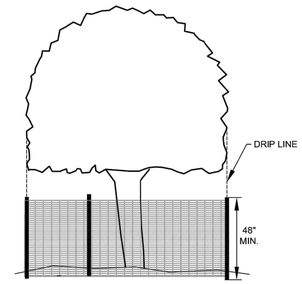

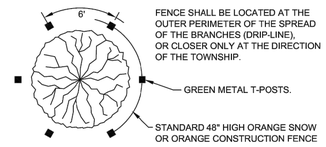

NOTES:
1. ALL TREES TO BE REMOVED WILL BE IDENTIFIED BY RED FLAGGING.
2. TREE PROTECTION FENCING IS TO BE ERECTED PRIOR TO ANY EARTHWORK OR CONSTRUCTION AND IS TO REMAIN IN PLACE UNTIL CONSTRUCTION AND GRADING IS COMPLETE.
3. ALL DEBRIS, FILL, EQUIPMENT OR MATERIAL IS TO BE KEPT CLEAR OF AREA WITHIN PROTECTIVE FENCE. NO CLEANING OF EQUIPMENT OR MATERIAL OR STORAGE OR DISPOSAL OF ANY MATERIAL WITHIN THE DRIP LINE OF ANY TREES TO BE SAVED.

TREE PROTECTION FENCE DETAIL
NOT TO SCALE

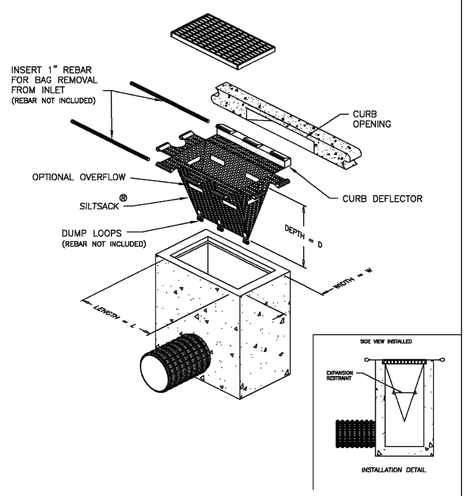

DETAIL OF INLET SEDIMENT CONTROL DEVICE
TYPE B – WITH CURB DEFLECTOR

Environmental
Your Complete Source for Geosynthetic Solutions

ACF Environmental, Inc.
2831 Cardwell Rd.
Richmond, Virginia 23234
(800) 448-3636

SILTSACK®
SPECIFICATIONS

NOTE: THE SILTSACK® WILL BE MANUFACTURED FROM A WOVEN POLYPROPYLENE FABRIC THAT MEETS OR EXCEEDS THE FOLLOWING SPECIFICATIONS.

REGULAR FLOW SILTSACK®
(FOR AREAS OF LOW TO MODERATE PRECIPITATION AND RUN-OFF)

PROPERTIES	TEST METHOD	UNITS	
GRAB TENSILE STRENGTH		ASTM D-4632	300 LBS
GRAB TENSILE ELONGATION		ASTM D-4632	20 %
PUNCTURE		ASTM D-4833	120 LBS
MULLEN BURST		ASTM D-3786	800 PSI
TRAPEZOID TEAR		ASTM D-4533	120 LBS
UV RESISTANCE		ASTM D-4355	80 %
APPARENT OPENING SIZE		ASTM D-4751	40 US SIEVE
FLOW RATE		ASTM D-4491	40 GAL/MIN/SQ FT
PERMITTIVITY		ASTM D-4491	0.50 SEC -1

* HI-FLOW SILTSACK®
(FOR AREAS OF MODERATE TO HEAVY PRECIPITATION AND RUN-OFF)

PROPERTIES	TEST METHOD	UNITS	
GRAB TENSILE STRENGTH		ASTM D-4632	265 LBS
GRAB TENSILE ELONGATION		ASTM D-4632	20 %
PUNCTURE		ASTM D-4833	135 LBS
MULLEN BURST		ASTM D-3786	420 PSI
TRAPEZOID TEAR		ASTM D-4533	45 LBS
UV RESISTANCE		ASTM D-4355	90 %
APPARENT OPENING SIZE		ASTM D-4751	20 US SIEVE
FLOW RATE		ASTM D-4491	200 GAL/MIN/SQ FT
PERMITTIVITY		ASTM D-4491	1.5 SEC -1

OIL-ABSORBANT SILTSACK®
(FOR AREAS WHERE THERE IS A CONCERN FOR OIL RUN-OFF OR SPILLS)

DEPENDING ON YOUR PARTICULAR APPLICATION, THE SILTSACK® CAN BE MADE FROM EITHER ONE OF THE ABOVE FABRICS WITH AN OIL-ABSORBANT PILLOW INSERT OR, MADE COMPLETELY FROM AN OIL-ABSORBANT SILTSACK ®WITH A WOVEN PILLOW INSERT.

SILTSACK DISTRIBUTORS:
PRICE & COMPANY
(www.priceandcompany.com)

METRO GRAND RAPIDS, MI
425 36TH STREET SW
WYOMING, MI 49548-2108
1-800-248-8230

METRO DETROIT, MI
29165 WALL STREET
WIXOM, MI 48393-3525
1-866-960-4300

(* HI-FLOW SILT SACK SHALL BE USED FOR ALL APPLICATIONS WITHIN PITTSFIELD TOWNSHIP)

SILTSACK
NOT TO SCALE

OHM
ARCHITECTS ENGINEERS PLANNERS
34000 Plymouth Road
Livonia, MI 48150
P (734) 522-6711 | F (734) 522-6427
OHM-ADVISORS.COM

PITTSFIELD CHARTER TOWNSHIP

Pittsfield Charter Township
6201 W. Michigan Ave.
Ann Arbor, MI 48108-9721
48108-9721
Tel. 734.822.3101
www.pittsfield-mi.gov

SILTSACK	BWA	DRW	12.01.03
TWP REV	BWA	DRW	11.04.27
UPDATES	TTN	DRW	10.01.20
Revision	By	Appd.	YY.MM.DD

Issued	By	Appd.	YY.MM.DD
File Name: SE-01	TTN	DRW	07.10.01
Permit-Seal	Dwn.	Chkd.	Dsgn. YY.MM.DD

Client/Project
PITTSFIELD TOWNSHIP

Pittsfield Township, Michigan

Title
SOIL EROSION DETAILS AND NOTES

Project No. 2075001300
Scale NOT TO SCALE
Revision 1

ISSUE: BID SET - NOT FOR CONSTRUCTION
REVISIONS:
02/14/2020 RESUBMITTED TO TOWNSHIP
--- ---
--- ---
--- ---
--- ---

DATE	PROJ NUMBER	ENG/ARCH	PROJ MGR	CADD	COUNTY	MUNICIPALITY
02/14/2020	0561-19-0060	GP	GM	AGG	WASHTENAW	PITTSFIELD CHARTER TWSP

OXFORD DESIGN-BUILD LLC
UNIVERSITY OF MICHIGAN LAUNDRY DEPOT
PITTSFIELD TWSP-SOIL EROSION DETAILS AND NOTES

SHEET C-505

COPYRIGHT 2019 OHM ALL DRAWINGS AND WRITTEN MATERIALS APPEARING HEREIN CONSTITUTE THE ORIGINAL AND UNPUBLISHED WORK OF OHM AND THE SAME MAY NOT BE DUPLICATED, DISTRIBUTED, OR DISCLOSED WITHOUT PRIOR WRITTEN CONSENT OF OHM

DRAWING PATH: P:\0201_0600\0561190060_UM_Laundry_Depot_AA_Airport\Drawings\Civil\Plans_Const\190206SESC.dwg Feb 13, 2020 - 11:17am