STORM SEWER AND DRAINAGE STRUCTURES

1.00 GENERAL

1.01 DESCRIPTION

A. Furnish all labor, tools, equipment and materials to construct all storm sewers, and drainage structures as herein specified. No sewers shall be accepted until the sewer system has passed the system acceptance tests.

1.02 TESTING

A. General

1. The CONTRACTOR shall furnish all equipment and personnel to conduct system acceptance tests as specified herein on all completed sewers. All tests shall be conducted under the supervision of the ENGINEER. No acceptance tests shall be conducted until the entire sewer system is constructed or just prior to placing the line in service providing the sewer pipe has been installed for not less than 30 days.

B. Test for Alignment

1. All sewers shall be laid accurately to the line and grade designed by the ENGINEER. The sewers will be tested for alignment by shining a light through the pipe at a manhole and viewing the light from an adjacent manhole. Any section of sewer in which a light cannot be seen from one manhole to the next shall be corrected to the satisfaction of the ENGINEER to pass this test.

C. Material Tests

1. The CONTRACTOR shall have tests of pipe strength made by an independent testing laboratory. Tests of up to 4 lengths of sewer pipe per hundred lengths may be required to show compliance with the Specifications. All pipe delivered to the job site shall be accompanied with a manufacturer's certificate of compliance to the Specifications.

D. Submittals

1. The CONTRACTOR shall submit shop drawings, or data sheets for all castings, steps and manholes.

2. The CONTRACTOR shall submit certification letters for all pipes. All letters must contain the following: Contractors name, project name, township name, current date, certification of pipe provided and letterhead of the certifying company.

2.00 PRODUCTS

2.01 PIPE

A. Reinforced concrete pipe and manhole tees shall be no less than the latest revision of ASTM C76, with the class designation as shown on the Plans or in the Proposal.

B. Concrete pipe shall have tongue and groove gasketed premium joints.

C. Corrugated steel pipe shall meet the requirements of AASHO M-190 for coated pipe latest revision. Minimum gage thickness shall be as shown on the Plans.

2.02 REINFORCED CONCRETE MANHOLES

A. Manholes shall conform to the current ASTM Specifications for precast reinforced concrete Manhole Sections, serial designation C478. Manhole section joints shall conform to ASTM Designation C990. All cones shall be eccentric with an offset step configuration. Concrete adjustment rings or riser rings shall not be used for adjusting the height of the structure.

B. All manhole component parts shall have the name of the manufacturer stencilled on the inside. The lettering or logo shall be a minimum of 4 inches high.

2.03 MORTAR FOR MANHOLES

A. Mortar for plastering manholes and drainage structures shall be made of one part Portland cement and two parts fine aggregate.

2.04 BRICK AND BLOCK

A. Brick for brick and mortar structures shall conform to the current ASTM Specification C32. Block for block and mortar structures shall conform to the current ASTM Specification C135.

B. The concrete block masonry used to construct manhole and catch basin walls shall be solid curved blocks with the inside and outside surfaces curved to the required radii. The blocks shall have tongue and groove or other approved type of joint at the ends so that the units interlock to form a strong, rigid structure. Curved blocks shall have the inside and outside surfaces parallel.

C. The block shall not exceed 18 inches in length or 8 inches in depth (height). No block shall be less than 6 inches in width (thickness). All blocks in one structure shall be of the same height dimension. The blocks shall be designed for length so that only full-length or half-length blocks are required to lay the circular wall of any one course.

D. Blocks intended for use in the cones or tops of manholes and catch basins shall have such shape as may be required to form the structure as shown on the Plans with inside and outside joint not to exceed 1/4-inch in thickness.

2.05 STRUCTURE FRAMES AND COVERS

A. Structures frames and covers shall weigh not less than 350 lbs. Each frame and cover shall have machined bearing surfaces and shall be suitably notched for convenient removal of the cover. Each solid manhole cover shall be marked Storm Sewer with letters integrally cast into the cover.

B. Frames and Covers shall be as follows:
1. For use on manholes: East Jordan 1040Z, with Type B cover lettered "STORM SEWER", or equal. Structures 24-inches in diameter shall have the 1045 Z frame.
2. For use on drainage structures in paved areas: East Jordan 1040Z, with Type M1 cover, with "DUMP NO WASTE" lettering and trout logo.
3. For use on drainage structures in curbed areas: East Jordan 7045 or 7065, with "DUMP NO WASTE" lettering and trout logo.
4. For use on drainage structures in landscaped areas: East Jordan 1040Z, with 1040 N 7", with "DUMP NO WASTE" lettering and trout logo.

C. All frames and covers shall be coated by the manufacturer with coal tar pitch varnish or other asphaltum coating reviewed by the ENGINEER.

D. All covers for drainage structures shall have storm drain markers affixed to the nearest available flat surface. The storm drain markers shall be manufactured by Das Manufacturing and shall be #SDR "No Dumping. Drains to River." The storm drain markers shall be installed per the manufacturer's recommendations.

2.06 MANHOLE STEPS

A. Steps shall be plastic coated steel. They shall be M.A. Industries PS1-PF for precast manholes, PS1-B for block manholes, or equal.

2.07 DRAINAGE STRUCTURES

A. All manholes and catch basins shall be precast unless otherwise specified.

B. Manhole and catch basin bottoms shall be concrete and top of slab shall have a troweled finish.

C. Upon approval by the ENGINEER, the manhole and catch basin walls may be constructed of concrete block masonry or concrete manhole pipe conforming to the requirements of the specifications previously listed. Construction shall be in accordance with the details for Catch Basin and Storm Sewer Manhole shown on the Plans.

D. A plaster coat of mortar 1/2-inch in thickness shall be applied to the inside and outside surface of all manholes and catch basins constructed with concrete block masonry or sewer brick. The inside coat of mortar shall be applied in a smooth, neat workmanlike manner.

E. Final adjustment of the top of manholes and catch basins, so that the manhole or catch basin cover is at finished elevations as shown on the Plans or meets the finished surface, may be accomplished with sewer brick conforming to the previously listed Specifications. The total height of brick for this purpose shall not exceed 9 inches. The total chimney height shall not exceed 18 inches.

F. All block and brick masonry units shall be laid in a full bed of mortar. The inside joints of the block masonry construction shall be tooled in a neat and workmanlike manner.

3.00 EXECUTION

3.01 EXCAVATION AND BACKFILL

A. All excavation and backfill 12 inches above the crown of pipe shall conform to Section 2.04, Earthwork of these specifications.

B. The trench shall be backfilled closely behind the pipe laying. Unless otherwise directed or permitted by the ENGINEER, the backfilling shall follow and be completed to the top of the trench within four pipe lengths behind pipe laying.

3.02 BEDDING

A. Concrete pipe shall be laid on a compacted granular material placed on the bottom of the trench to a depth of not less than 4 inches. Where indicated on the Plans or required by the ENGINEER, concrete encasement or cradle shall be used.

B. For all pipes, compacted aggregate material shall be placed at the sides of the pipe in 12-inch lifts and cover not less than 12 inches above the crown of the pipe.

C. "Granular Material" shall be MDOT class II, placed in not more than 6-inch layers and compacted to not less than 90% standard density.

3.03 PIPE INSTALLATION

A. All pipe shall be laid true to the required lines and grades. All trenches when pipe laying is in progress, shall be kept dry, and all pipes and fittings shall be uniformly supported on a properly trimmed bedding with holes at each joint to receive bells. All pipe shall be laid with bells uphill.

B. The grade as shown on the profiles is that of the pipe invert and that to which the work must conform. The grade shall be kept by laser or other tools which shall be furnished by the CONTRACTOR at his expense. Each pipe shall be laid accurately to the line and grade as shown on the Plans and in such manner as to form a close concentric joint with the adjoining pipe and prevent sudden offsets of the invert. The interior of sewers shall, as the work progresses, be cleaned of all dirt, cement, debris and other superfluous materials of every description. Bulkheads shall be used to keep foreign materials out of the open end of the sewer when work is not in progress.

C. The location of the piping as shown on the Plans has been determined to avoid, insofar as possible, interference with trees or structures or fixtures above ground and other underground mains, services, utilities or structures. Any change in location or alignment of piping, which may be found more feasible or practicable as the work progresses, shall be made by the CONTRACTOR, as the ENGINEER may direct.

D. All pipe shall be carefully lowered and moved into position in trench or vault in a controlled manner such as will prevent damage to the pipe and any coatings or lining. An excessive amount of scratching on the surface of the concrete pipe will be considered cause for rejection.

E. All cutting of the pipe shall be done in a neat workmanlike manner with the least amount of waste and without damage to existing or new lines. A fine toothsaw, tubing cutter or similar tool may be used to cut concrete pipe. Cuts must be square. Ragged edges shall be removed with a cutting tool or file.

F. Breaks in pipe or joints shall be repaired to the satisfaction of the ENGINEER and at the expense of the CONTRACTOR.

3.04 CONNECTIONS TO EXISTING MANHOLES

A. When a sewer is connected to an existing manhole, a hole adequate to receive the new pipe shall be cored into the manhole.

B. If the existing manhole is of brick construction, a single rowlock of brick shall be turned over the new pipe and the existing manhole brick work shall be cleaned, pointed and given a 1/2-inch mortar coat on the outside surface.

C. For connections to existing precast reinforced concrete manholes, a hole shall be cored into the concrete manhole wall to receive the pipe. Reinforcing steel shall not be cut out shall be bent and replaced in the area that is to be patched. A form shall be constructed over the area of pipe penetration. The formed area shall then be filled with concrete.

D. Closure of the manhole wall shall be made watertight using concrete.

3.05 ANIMAL GRATES

A. Animal grates shall be required on all endsections greater than 12-inch diameter.

PCT February 2008

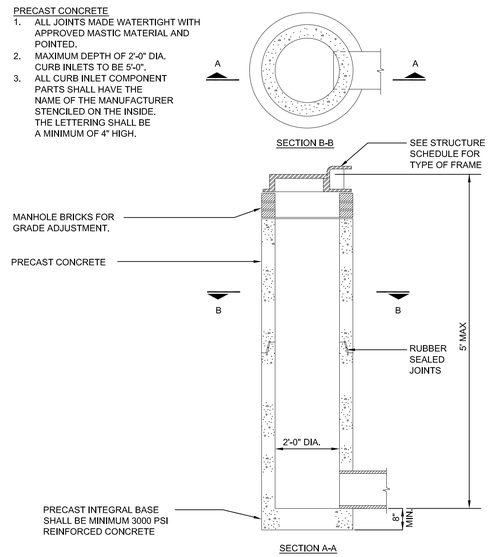

2' DIAMETER INLET

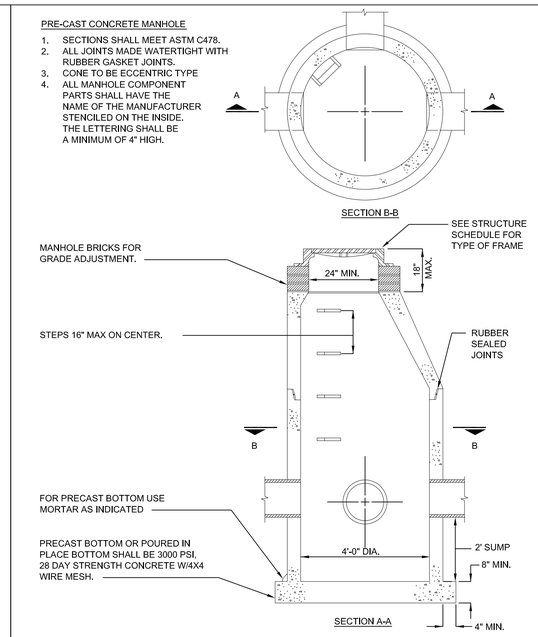

4' DIAMETER CATCH BASIN

AFFIX TO SURFACE ON OR NEAR ALL DRAINAGE COVERS.

STORM DRAIN MARKER

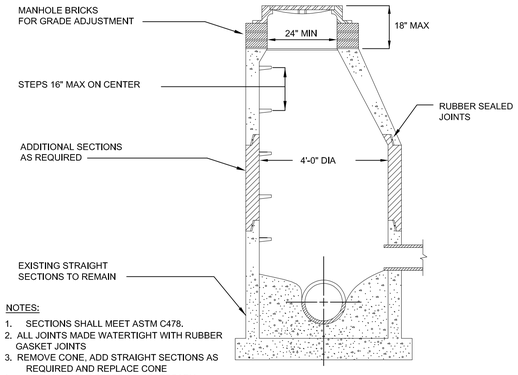

NOTES:
1. SECTIONS SHALL MEET ASTM C478.
2. ALL JOINTS MADE WATERTIGHT WITH RUBBER GASKET JOINTS
3. REMOVE CONE, ADD STRAIGHT SECTIONS AS REQUIRED AND REPLACE CONE
4. ADD MANHOLE STEPS AS NECESSARY
5. ADD ADJUSTMENT RINGS FOR RIM GRADE ADJUSTMENT

MANHOLE & CATCH BASIN RECONSTRUCTION DETAIL

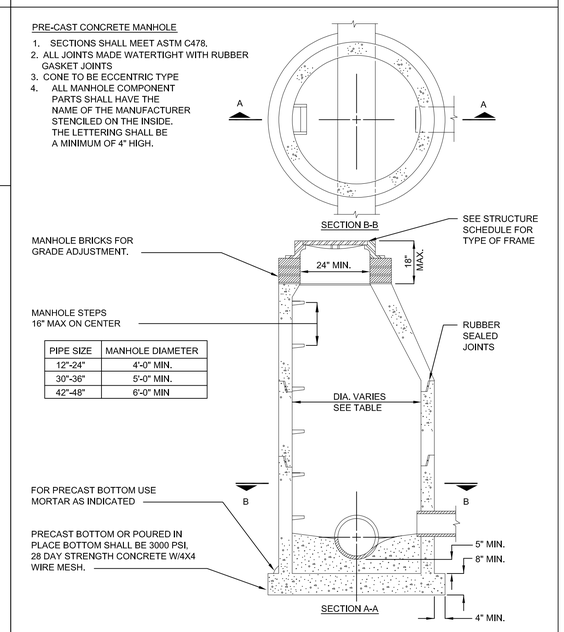

PIPE SIZE	MANHOLE DIAMETER
12"-24"	4'-0" MIN.
30"-36"	5'-0" MIN.
42"-48"	6'-0" MIN

STORM SEWER MANHOLE

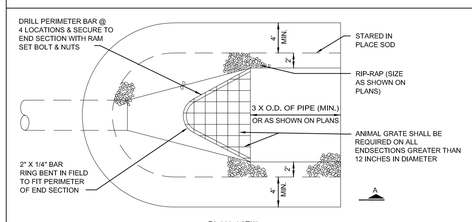

PLAN VIEW

1. RIPRAP THICKNESS AS SHOWN ON PLANS.

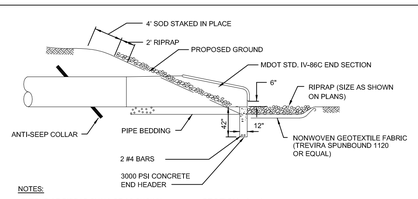

NOTES:
EXTENT OF RIPRAP SHALL BE AS SHOWN HERE OR AS SHOWN ON PLANS, WHICHEVER IS GREATEST.

SECTION A–A

END SECTION AND RIPRAP DETAIL

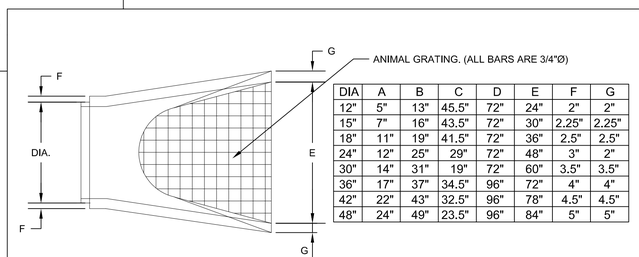

DIA	A	B	C	D	E	F	G
12"	5"	13"	45.5"	72"	24"	2"	2"
15"	7"	16"	43.5"	72"	30"	2.25"	2.25"
18"	11"	19"	41.5"	72"	36"	2.5"	2.5"
24"	12"	25"	29"	72"	48"	3"	2"
30"	14"	31"	19"	72"	60"	3.5"	3.5"
36"	17"	37"	34.5"	96"	72"	4"	4"
42"	22"	43"	32.5"	96"	78"	4.5"	4.5"
48"	24"	49"	23.5"	96"	84"	5"	5"

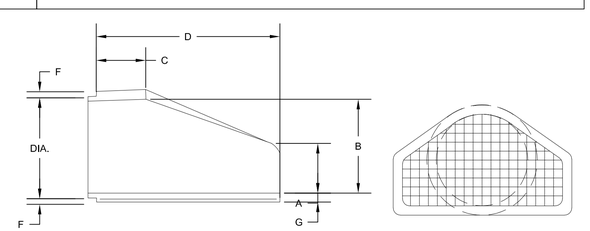

NOTE:
FLARED END SECTIONS SHALL BE MANUFACTURED TO THE CLASS SPECIFICATIONS AS THE PIPE ITSELF.

STANDARD END SECTIONS FOR PRECAST CONCRETE

Pittsfield Charter Township
6201 W. Michigan Ave.
Ann Arbor, MI 48108–9721
48108–9721
Tel. 734.822.3101
www.pittsfield-mi.gov

Revision	By	Appd.	YY.MM.DD
UPDATES	MRH	DRW	14.01.24
TWP REV	BWA	DRW	12.08.09
TWP REV	BWA	DRW	11.04.27
UPDATES	BWA	DRW	10.10.25
UPDATES	TTN	DRW	10.01.20

Issued	By	Appd.	YY.MM.DD
File Name: ST–01	TTN	DRW	07.10.01
	Dwn.	Chkd.	Dsgn. YY.MM.DD

Permit-Seal

Client/Project
PITTSFIELD TOWNSHIP

Pittsfield Township, Michigan

Title
STORM SEWER DETAILS AND SPECIFICATIONS

Project No.
2075001300

Scale
NOT TO SCALE

Revision