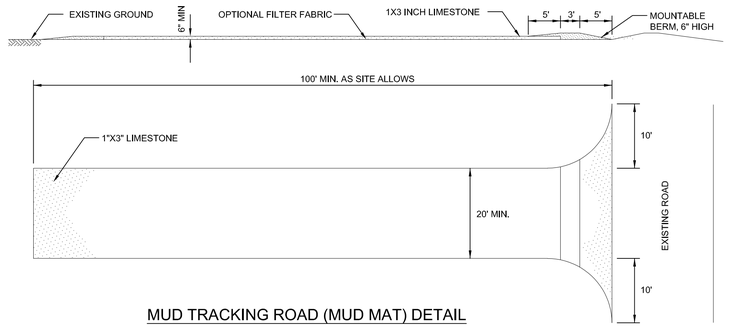

MUD TRACKING ROAD (MUD MAT) DETAIL

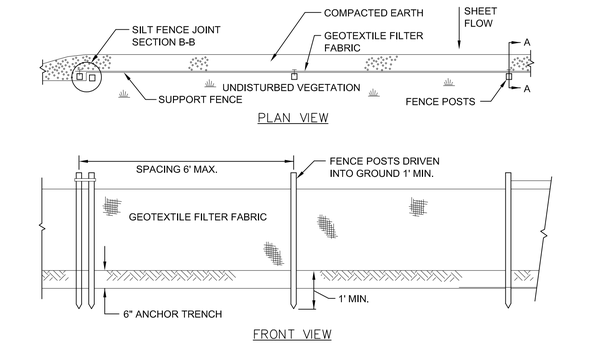

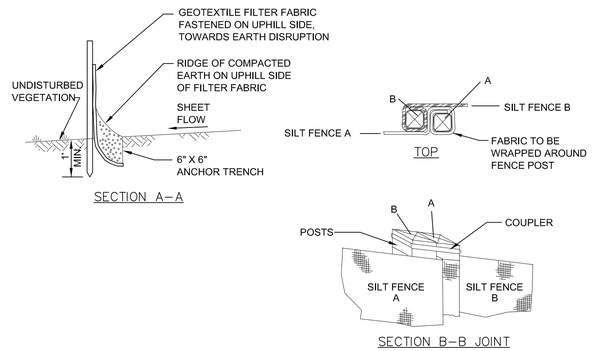

SILT FENCE

NOT TO SCALE

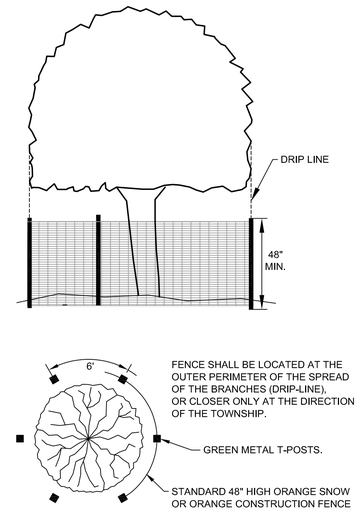

NOTES:
1. ALL TREES TO BE REMOVED WILL BE IDENTIFIED BY RED FLAGGING.
2. TREE PROTECTION FENCING IS TO BE ERECTED PRIOR TO ANY EARTHWORK OR CONSTRUCTION AND IS TO REMAIN IN PLACE UNTIL CONSTRUCTION AND GRADING IS COMPLETE.
3. ALL DEBRIS, FILL, EQUIPMENT OR MATERIAL IS TO BE KEPT CLEAR OF AREA WITHIN PROTECTIVE FENCE. NO CLEANING OF EQUIPMENT OR MATERIAL OR STORAGE OR DISPOSAL OF ANY MATERIAL WITHIN THE DRIP LINE OF ANY TREES TO BE SAVED.

TREE PROTECTION FENCE DETAIL

NOT TO SCALE

PITTSFIELD CHARTER TOWNSHIP
SOIL EROSION AND SEDIMENTATION CONTROL NOTES
GENERAL

1. The contractor shall implement and maintain the soil erosion control measures as shown on the plans at all times during construction on this project. Any modifications or additions to the soil erosion control measures due to construction or changed conditions, shall be complied with as required or directed by the owner, project engineer or Pittsfield Township.
2. All soil erosion and sedimentation control work shall conform to the permit requirements of Pittsfield Township and the laws of the State of Michigan.
3. A NPDES construction activity permit is required for all sites greater than 5 acres.
4. Daily inspections shall be made by the contractor. Periodic inspections may be made by the owner/project engineer/Township to determine the effectiveness of erosion and sedimentation control measures. Any necessary corrections shall be made without delay.
5. Erosion and sedimentation from work on the site shall be contained on the site and not be allowed to collect on any off-site areas or in waterways.
6. All mud/dirt tracked onto roads from the site due to construction, shall be promptly removed by the contractor.
7. Restoration of all disturbed areas, including placement of topsoil, seed, fertilizer and mulch and/or sod shall be done within 5 days of the completion of final grade.
8. Construction operations shall be scheduled and performed so that preventative soil erosion control measures are in place prior to excavation in critical areas and temporary stabilization measures are in place immediately following backfilling operations.
9. Special precautions will be taken in the use of construction equipment to prevent situations that promote erosion.
10. Proper dust control shall be maintained during construction by use of water trucks and/or chloride as required.
11. The contractor shall be responsible for maintaining all temporary soil erosion control measures and removal of some upon authorized completion of project. Completion of project will not be authorized until all site work, home building, road work and utility construction is complete and all soils are stabilized.
12. The contractor shall not grade in existing wetland or conservation areas to be protected. Silt fence shall be installed and maintained adjacent to existing wetland and conservation areas to prevent grading, erosion and sedimentation into them.
13. Tree protection fencing must remain intact until restoration of the site is complete.

SEQUENCE OF CONSTRUCTION

1. Install sediment fence and tree protection fencing prior to any grading operation.
2. Install mud-tracking pad.
3. Construct temporary sediment/detention basin.
4. Place topsoil, fertilizer, seed and mulch over the entire detention basin area.
5. Rough grade site, stockpile topsoil and begin building construction.
6. Install storm drainage system including riprap and parking lot inlet filters and detention basin standpipe.
7. Maintain erosion and sedimentation control measures, as required.
8. Install sanitary sewer and water systems.
9. Bring pavement areas to sub-base grade, place sub-base and bituminous pavement.
10. Install franchised utilities.
11. Finish grade, redistribute topsoil, seed and mulch all disturbed areas.
12. Remove any accumulated sediment within the detention basin and replace clean washed stone around standpipe.
13. Complete construction of site.
14. Insure all soil is stabilized. Remove all temporary soil erosion control measures.

SEEDING/SOD

1. Seed or sod in accordance with project specifications.
2. All areas of disturbed earth that are not to be paved or sodded shall have 4 inches of topsoil, seed, fertilizer and mulch.
3. Immediately after seeding, mulch all seeded areas with unweathered small grain straw (preferably wheat) or hay spread. Spread uniformly at the rate of 1 ½ to 2 tons or 100 pounds (2 to 3 bales) per 1,000 square foot. This mulch should be anchored with a disc-type mulch-anchoring tool.
4. Any disturbed area not paved, seeded or mulched, sodded or built upon by November 15, is to be mulched in the manner as specified above, in order to provide soil erosion protection during the winter and early spring.
5. All erosion and sedimentation control prevention procedures and structures are to comply with the Standards and Specifications for soil erosion and sediment control of the Washtenaw County Soil Conservation District.
6. Drainage ditches and slopes steeper than 1:4 (25%) shall be stabilized with erosion control blankets.
7. Steep slopes that do not take upon initial seeding must be re-seeded and stabilized with erosion control blankets.
8. Where excavation has been through lawn areas, the CONTRACTOR shall restore the disturbed area by placing topsoil and seeding or sodding over the final backfill material.

CATCH BASIN/MANHOLE PROTECTION

1. Protect storm sewer catch basins with Siltsack. or approved equivalent as follows:

ROADS

1. During construction, all roads shall be protected from unvegetated areas washing onto road surfaces by placement of silt fence behind curb or a 10 foot wide straw mulch bank behind the curb or other approved method and/or as shown on the plans.
2. During construction of any portion of the project, roads shall be maintained free of dirt, silt and construction debris.

Pittsfield SEC 9/22/2009

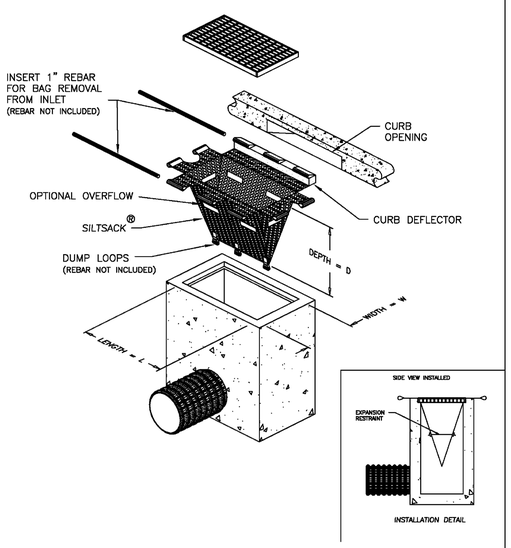

DETAIL OF INLET SEDIMENT CONTROL DEVICE
TYPE B – WITH CURB DEFLECTOR

ACF Environmental
Your Complete Source for Geosynthetic Solutions

ACF Environmental, Inc.
2831 Cardwell Rd.
Richmond, Virginia 23234
(800) 448-3636

SILTSACK®
SPECIFICATIONS

NOTE: THE SILTSACK® WILL BE MANUFACTURED FROM A WOVEN POLYPROPYLENE FABRIC THAT MEETS OR EXCEEDS THE FOLLOWING SPECIFICATIONS.

REGULAR FLOW SILTSACK®
(FOR AREAS OF LOW TO MODERATE PRECIPITATION AND RUN-OFF)

PROPERTIES	TEST METHOD	UNITS
GRAB TENSILE STRENGTH	ASTM D-4632	300 LBS
GRAB TENSILE ELONGATION	ASTM D-4632	20 %
PUNCTURE	ASTM D-4833	120 LBS
MULLEN BURST	ASTM D-3786	800 PSI
TRAPEZOID TEAR	ASTM D-4533	120 LBS
UV RESISTANCE	ASTM D-4355	80 %
APPARENT OPENING SIZE	ASTM D-4751	40 US SIEVE
FLOW RATE	ASTM D-4491	40 GAL/MIN/SQ FT
PERMITTIVITY	ASTM D-4491	0.55 SEC -1

* HI-FLOW SILTSACK®
(FOR AREAS OF MODERATE TO HEAVY PRECIPITATION AND RUN-OFF)

PROPERTIES	TEST METHOD	UNITS
GRAB TENSILE STRENGTH	ASTM D-4632	265 LBS
GRAB TENSILE ELONGATION	ASTM D-4632	20 %
PUNCTURE	ASTM D-4833	135 LBS
MULLEN BURST	ASTM D-3786	420 PSI
TRAPEZOID TEAR	ASTM D-4533	45 LBS
UV RESISTANCE	ASTM D-4355	90 %
APPARENT OPENING SIZE	ASTM D-4751	20 US SIEVE
FLOW RATE	ASTM D-4491	200 GAL/MIN/SQ FT
PERMITTIVITY	ASTM D-4491	1.5 SEC -1

OIL-ABSORBANT SILTSACK®
(FOR AREAS WHERE THERE IS A CONCERN FOR OIL RUN-OFF OR SPILLS)

DEPENDING ON YOUR PARTICULAR APPLICATION, THE SILTSACK® CAN BE MADE FROM EITHER ONE OF THE ABOVE FABRICS WITH AN OIL-ABSORBANT PILLOW INSERT OR, MADE COMPLETELY FROM AN OIL-ABSORBANT SILTSACK® WITH A WOVEN PILLOW INSERT.

SILTSACK DISTRIBUTORS:
PRICE & COMPANY
(www.priceandcompany.com)

METRO GRAND RAPIDS, MI
426 36TH STREET SW
WYOMING, MI 49548-2108
1-800-248-8230

METRO DETROIT, MI
29165 WALL STREET
WIXOM, MI 48393-3525
1-866-960-4300

(* HI-FLOW SILT SACK SHALL BE USED FOR ALL APPLICATIONS WITHIN PITTSFIELD TOWNSHIP)

SILTSACK

NOT TO SCALE

Pittsfield Charter Township
6201 W. Michigan Ave.
Ann Arbor, MI 48108–9721
48108–9721
Tel. 734.822.3101
www.pittsfield-mi.gov

SILTSACK	BWA	DRW	12.01.03
TWP REV	BWA	DRW	11.04.27
UPDATES	TTN	DRW	10.01.20
Revision	By	Appd.	YY.MM.DD

Issued	By	Appd.	YY.MM.DD
File Name: SE–01	TTN	DRW	07.10.01
	Dwn.	Chkd.	Dsgn. YY.MM.DD

Permit-Seal

Client/Project
PITTSFIELD TOWNSHIP

Pittsfield Township, Michigan

Title
SOIL EROSION DETAILS AND NOTES

Project No. 2075001300
Scale NOT TO SCALE
Revision